CITY OF HOUSTON

HOUSTON PUBLIC WORKS

CAPITAL PROJECTS

LIFT STATION REHABILITATION AND RECONSTRUCTION DESIGN - SCOTT ST. LIFT STATION No. 1

WBS NO. R-000267-127A-3

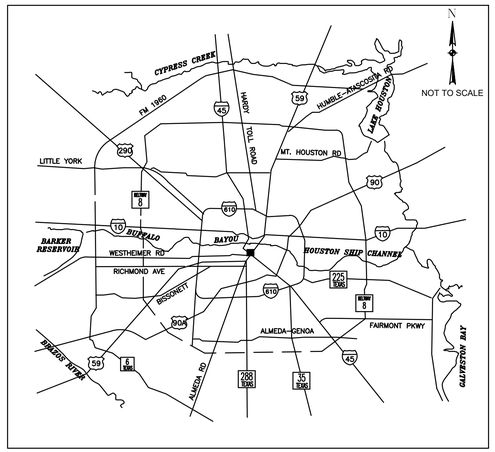

LOCATION MAP

KEY MAP NO 534-G & 494-X
GIMS MAP NO 5555C & 5456B
COUNCIL DISTRICT I

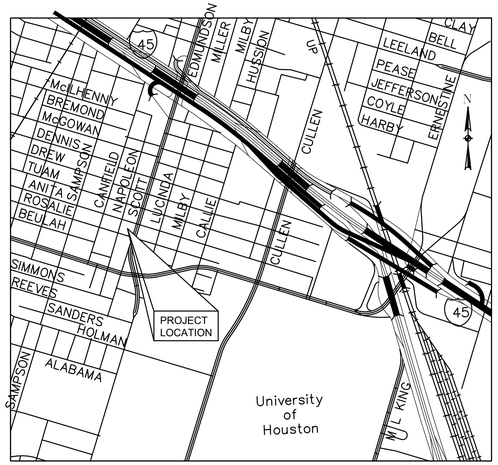

VICINITY MAP
KEY MAP NO 493Z
GIMS MAP NO 5456C

TDLR EABPR _____

MAYOR
JOHN WHITMIRE

CONTROLLER
CHRIS HOLLINS

DISTRICT COUNCIL MEMBERS

AMY PECK, DISTRICT A
TARSHA JACKSON, DISTRICT B
ABBIE KAMIN, DISTRICT C
CAROLYN EVANS-SHABAZZ, DISTRICT D
FRED FLICKINGER, DISTRICT E
TIFFANY D. THOMAS, DISTRICT F
MARY NAN HUFFMAN, DISTRICT G
MARIO CASTILLO, DISTRICT H
JOAQUIN MARTINEZ, DISTRICT I
EDWARD POLLARD, DISTRICT J
MARTHA CASTEX-TATUM, DISTRICT K

COUNCIL MEMBERS AT-LARGE

JULIAN RAMIREZ, POSITION 1
WILLIE DAVIS, POSITION 2
TWILA CARTER, POSITION 3
LETITIA PLUMMER, POSITION 4
SALLIE ALCORN, POSITION 5

QUIDDITY ENGINEERING
2322 W GRAND PARKWAY, SUITE 150, KATY, TX 77449
832-913-4000
TX FIRM NUMBER: 23290

ENGINEER'S SEAL

SURVEYED BY:
FB NO.

PARKS-FORESTRY DEPT.

METRO

HOUSTON WATER

TRANSPORTATION & DRAINAGE OPERATIONS

CAPITAL PROJECTS

SURVEY

CITY ENGINEER DATE

DIRECTOR OF HOUSTON PUBLIC WORKS DATE

FOR CITY OF HOUSTON USE ONLY

0 1 2 3 4 5 ORIGINAL SCALE IN INCHES FOR REDUCED PLANS

NO.	DATE	REVISIONS	APP.

SHEET NO.		GENERAL
1.	0-G-1	COVER
2.	0-G-2	SHEET INDEX
3.	0-G-3	GENERAL CONSTRUCTION NOTES SHEET 1 OF 2
4.	0-G-4	GENERAL CONSTRUCTION NOTES SHEET 2 OF 2
5.	0-G-5	GENERAL SYMBOLS & ABBREVIATIONS SHEET 1 OF 2
6.	0-G-6	GENERAL SYMBOLS & ABBREVIATIONS SHEET 2 OF 2
7.	0-G-7	HYDRAULIC PROFILE SHEET 1 OF 2
8.	0-G-8	HYDRAULIC PROFILE SHEET 1 OF 2
		CIVIL
9.	0-C-1	SURVEY CONTROL SHEET
10.	0-C-2	EXISTING SITE PLAN
11.	0-C-3	EXISTING YARD PIPING PLAN
12.	0-C-4	SITE DEMOLITION PLAN
13.	0-C-5	YARD PIPING DEMOLITION PLAN
14.	0-C-6	YARD PIPING DEMOLITION SECTION
15.	0-C-7	PROPOSED SITE PLAN
16.	0-C-8	PROPOSED YARD PIPING PLAN
17.	0-C-9	PROPOSED YARD PIPING ENLARGED PLAN A
18.	0-C-10	PROPOSED YARD PIPING ENLARGED PLAN B
19.	0-C-11	PROPOSED YARD PIPING BASELINE A
20.	0-C-12	PROPOSED YARD PIPING BASELINE B
21.	0-C-13	PROPOSED YARD PIPING BASELINE C
22.	0-C-14	CONSTRUCTION SEQUENCING & BYPASS PHASE 1
23.	0-C-15	CONSTRUCTION SEQUENCING & BYPASS PHASE 2
24.	0-C-16	CONSTRUCTION SEQUENCING & BYPASS PHASE 3
25.	0-C-17	CONSTRUCTION SEQUENCING & BYPASS PHASE 4
26.	0-C-18	SITE PAVING & DIMENSION PLAN
27.	0-C-19	SITE DRAINAGE PLAN
28.	0-C-20	SITE DRAINAGE CALCULATIONS
29.	0-C-21	SITE GRADING PLAN
30.	0-C-22	CIVIL DETAILS SHEET 1 OF 16
31.	0-C-23	CIVIL DETAILS SHEET 2 OF 16
32.	0-C-24	CIVIL DETAILS SHEET 3 OF 16
33.	0-C-25	CIVIL DETAILS SHEET 4 OF 16
34.	0-C-26	CIVIL DETAILS SHEET 5 OF 16
35.	0-C-27	CIVIL DETAILS SHEET 6 OF 16
36.	0-C-28	CIVIL DETAILS SHEET 7 OF 16
37.	0-C-29	CIVIL DETAILS SHEET 8 OF 16
38.	0-C-30	CIVIL DETAILS SHEET 9 OF 16
39.	0-C-31	CIVIL DETAILS SHEET 10 OF 16
40.	0-C-32	CIVIL DETAILS SHEET 11 OF 16
41.	0-C-33	CIVIL DETAILS SHEET 12 OF 16
42.	0-C-34	CIVIL DETAILS SHEET 13 OF 16
43.	0-C-35	CIVIL DETAILS SHEET 14 OF 16
44.	0-C-36	CIVIL DETAILS SHEET 15 OF 16
45.	0-C-37	CIVIL DETAILS SHEET 16 OF 16
46.	0-C-38	STORM WATER POLLUTION PREVENTION PLAN
47.	0-C-39	TREE PROTECTION PLAN SHEET 1 OF 2
48.	0-C-40	TREE PROTECTION PLAN SHEET 2 OF 2
		MECHANICAL
49.	0-M-1	LIFT STATION MECHANICAL DETAILS SHEET 1 OF 6
50.	0-M-2	LIFT STATION MECHANICAL DETAILS SHEET 2 OF 6
51.	0-M-3	LIFT STATION MECHANICAL DETAILS SHEET 3 OF 6
52.	0-M-4	LIFT STATION MECHANICAL DETAILS SHEET 4 OF 6
53.	0-M-5	LIFT STATION MECHANICAL DETAILS SHEET 5 OF 6
54.	0-M-6	LIFT STATION MECHANICAL DETAILS SHEET 6 OF 6
55.	1-M-1	DRY WEATHER PUMP STATION DEMOLITION PLAN
56.	1-M-2	DRY WEATHER PUMP STATION DEMOLITION SECTION
57.	1-M-3	DRY WEATHER PUMP STATION IMPROVEMENT PLAN
58.	1-M-4	DRY WEATHER PUMP STATION IMPROVEMENTS SECTION 1 OF 2
59.	1-M-5	DRY WEATHER PUMP STATION IMPROVEMENTS SECTION 2 OF 2
60.	1-M-6	DRY WEATHER PUMP STATION PUMP DATA AND CURVES SHEET 1 OF 2
61.	1-M-7	DRY WEATHER PUMP STATION PUMP DATA AND CURVES SHEET 2 OF 2
62.	2-M-1	WET WEATHER LIFT STATION LOWER LEVEL - EXISTING
63.	2-M-2	WET WEATHER LIFT STATION MEZZANINE LEVEL - EXISTING
64.	2-M-3	WET WEATHER LIFT STATION GROUND LEVEL EXTERIOR - EXISTING
65.	2-M-4	WET WEATHER LIFT STATION GROUND LEVEL INTERIOR - EXISTING
66.	2-M-5	WET WEATHER LIFT STATION LOWER LEVEL - DEMOLITION
67.	2-M-6	WET WEATHER LIFT STATION MEZZANINE LEVEL - DEMOLITION
68.	2-M-7	WET WEATHER LIFT STATION GROUND LEVEL EXTERIOR - DEMOLITION
69.	2-M-8	WET WEATHER LIFT STATION GROUND LEVEL INTERIOR - DEMOLITION
70.	2-M-9	WET WEATHER LIFT STATION LOWER LEVEL - PROPOSED
71.	2-M-10	WET WEATHER LIFT STATION MEZZANINE LEVEL - PROPOSED
72.	2-M-11	WET WEATHER LIFT STATION GROUND LEVEL EXTERIOR - PROPOSED
73.	2-M-12	WET WEATHER LIFT STATION GROUND LEVEL INTERIOR - PROPOSED
74.	2-M-13	WET WEATHER LIFT STATION LOWER LEVEL - EXISTING
75.	2-M-14	WET WEATHER LIFT STATION MEZZANINE LEVEL - EXISTING
76.	2-M-15	WET WEATHER LIFT STATION EXISTING
77.	2-M-16	WET WEATHER LIFT STATION EAST SECTION - EXISTING
78.	2-M-17	WET WEATHER LIFT STATION LOWER LEVEL - DEMOLITION
79.	2-M-18	WET WEATHER LIFT STATION MEZZANINE LEVEL - DEMOLITION
80.	2-M-19	WET WEATHER LIFT STATION DEMOLITION
81.	2-M-20	WET WEATHER LIFT STATION EAST SECTION - DEMOLITION
82.	2-M-21	WET WEATHER LIFT STATION LOWER LEVEL - PROPOSED
83.	2-M-22	WET WEATHER LIFT STATION MEZZANINE LEVEL - PROPOSED
84.	2-M-23	WET WEATHER LIFT STATION PROPOSED
85.	2-M-24	WET WEATHER LIFT STATION EAST SECTION - PROPOSED
86.	2-M-25	WET WEATHER PUMP STATION PUMP DATA AND CURVES SHEET 1 OF 3
87.	2-M-26	WET WEATHER PUMP STATION PUMP DATA AND CURVES SHEET 2 OF 3
88.	2-M-27	WET WEATHER PUMP STATION PUMP DATA AND CURVES SHEET 3 OF 3
89.	3-M-1	CHEMICAL FEED SYSTEM DEMOLITION PLAN
90.	3-M-2	CHEMICAL STORAGE AND CONTAINMENT UPPER PLAN
91.	3-M-3	CHEMICAL STORAGE AND CONTAINMENT LOWER PLAN
92.	3-M-4	CHEMICAL FEED SYSTEM PROPOSED SECTION SHEET 1 OF 2
93.	3-M-5	CHEMICAL TANK DETAILS
94.	3-M-6	FES FEED BUILDING PLAN AND SECTIONS SHEET 1 OF 2
95.	3-M-7	FES FEED BUILDING PLAN AND SECTIONS SHEET 2 OF 2
96.	4-M-1	WET WEATHER LIFT STATION FLOW METER STATION
97.	5-M-1	ODOR CONTROL SYSTEM PROPOSED PLAN
98.	5-M-2	ODOR CONTROL SYSTEM PROPSOED SECTION 1 OF 2
99.	5-M-3	ODOR CONTROL SYSTEM PROPSOED SECTION 2 OF 2
100.	6-M-1	ELECTRICAL BUILDING NO. 2 BUILDING PLAN
101.	6-M-2	ELECTRICAL BUILDING NO. 2 BUILDING ELEVATIONS
		BUILDING
102.	0-B-1	BUILDING MECHANICAL SYMBOLS, ABBREVIATIONS, & NOTES
103.	6-B-1	ELECTRICAL BUILDING NO. 2 HVAC PLAN
		STRUCTURAL
104.	0-S-1	STRUCTURAL NOTES & DETAILS SHEET 1 OF 4
105.	0-S-2	STRUCTURAL DETAILS SHEET 2 OF 4
106.	0-S-3	STRUCTURAL DETAILS SHEET 3 OF 4
107.	0-S-4	STRUCTURAL DETAILS SHEET 4 OF 4
108.	1-S-1	DRY WEATHER PUMP STATION IMPROVEMENT PLAN
109.	1-S-2	DRY WEATHER PUMP STATION LOWER LEVEL PLAN & 3D VIEW
110.	1-S-3	DRY WEATHER PUMP STATION LOWER LEVEL SECTIONS
111.	2-S-1	WET WEATHER LIFT STATION WALKWAY PLATFORM FOUNDATION
112.	2-S-2	WET WEATHER LIFT STATION WALKWAY GRATING PLAN
113.	2-S-3	WET WEATHER LIFT STATION OVERHEAD CRANE - RUNWAY BEAMS
114.	3-S-1	CHEMICAL STORAGE TOP VIEW PLAN & SECTIONS
115.	3-S-2	CHEMICAL STORAGE & CHEMICAL BUILDING PAD FOUNDATION PLAN & 3D VIEW
116.	3-S-3	CHEMICAL STORAGE & CHEMICAL BUILDING PAD FOUNDATION SECTIONS
117.	3-S-4	CHEMICAL STORAGE GRATING PLANS & SECTIONS
118.	4-S-1	WET WEATHER LIFT STATION FLOW METER STATION
119.	4-S-2	WET WEATHER LIFT STATION FLOW METER STATION STEEL WALKWAY FRAMING PLAN & SECTIONS
120.	5-S-1	ODOR CONTROL STATION FOUNDATION PLAN & SECTIONS
121.	6-S-1	ELECTRICAL BUILDING NO. 2 PLAN & SECTIONS
		ELECTRICAL
122.	0-E-01	LEGENDS AND SYMBOLS SHEET 1
123.	0-E-02	LEGENDS AND SYMBOLS SHEET 2
124.	0-E-03	CONSTRUCTION NOTES
125.	0-E-04	OVERALL EXISTING SITE AND TEMPORARY PLAN
126.	0-E-05	TEMPORARY SITE POWER RISER DIAGRAM
127.	0-E-06	TEMPORARY PANELBOARD SCHEDULES
128.	0-E-07	OVERALL ONE LINE DIAGRAM - EXISTING
129.	0-E-08	CONDUIT SCHEDULE SHEET 1 - EXISTING
130.	0-E-09	CONDUIT SCHEDULE SHEET 2 - EXISTING
131.	0-E-10	OVERALL SITE PLAN - PROPOSED
132.	0-E-11	OVERALL UNDERGROUND SITE PLAN - PROPOSED
133.	0-E-12	OVERALL SIMPLIFIED ONE LINE DIAGRAM - PROPOSED
134.	0-E-13	OVERALL LOAD ANALYSIS - PROPOSED
135.	0-E-21	LIGHT FIXTURE SCHEDULE AND CONTROL DIAGRAM
136.	0-E-22	CONDUIT SCHEDULE SHEET 1 - PROPOSED
137.	0-E-23	CONDUIT SCHEDULE SHEET 2 - PROPOSED
138.	0-E-91	DETAILS SHEET 1
139.	0-E-92	DETAILS SHEET 2
140.	0-E-93	DETAILS SHEET 3
141.	0-E-94	DETAILS SHEET 4
142.	0-E-95	DETAILS SHEET 5
143.	0-E-96	DETAILS SHEET 6
144.	1-E-01	DRY WEATHER PUMP STATION ENLARGED PLAN - PROPOSED
145.	2-E-01	WET WEATHER PUMP STATION GROUND LEVEL PLAN - EXISTING
146.	2-E-02	WET WEATHER PUMP STATION MOTOR LEVEL PLAN - EXISTING
147.	2-E-03	WET WEATHER PUMP STATION PUMP LEVEL PLAN - EXISTING
148.	2-E-04	WET WEATHER PUMP STATION SECTION - EXISTING
149.	2-E-05	WET WEATHER PUMP STATION GROUND LEVEL HVAC CONDUIT PLAN - EXISTING
150.	2-E-11	WET WEATHER PUMP STATION GROUND LEVEL PLAN - PROPOSED
151.	2-E-12	WET WEATHER PUMP STATION MEZZANINE LEVEL PLAN - PROPOSED
152.	2-E-13	WET WEATHER PUMP STATION LOWER LEVEL PLAN - PROPOSED
153.	2-E-14	WET WEATHER PUMP STATION SECTION - PROPOSED
154.	2-E-15	WET WEATHER PUMP STATION GROUND LEVEL HVAC PLAN - PROPOSED
155.	2-E-21	WET WEATHER PUMP STATION MCC-2A ONE LINE DIAGRAM - PROPOSED
156.	2-E-22	WET WEATHER PUMP STATION MCC-2B ONE LINE DIAGRAM - PROPOSED
157.	2-E-23	WET WEATHER PUMP TYPICAL MCC CONTROL DIAGRAM - PROPOSED
158.	2-E-24	WET WEATHER BACKUP FLOAT CONTROL PANEL SCHEMATIC DIAGRAM
159.	2-E-25	WET WEATHER PUMP STATION PANELBOARD SCHEDULES - PROPOSED
160.	3-E-01	CHEMICAL FEED AND STORAGE FACILITY ENLARGED PLAN - PROPOSED
161.	4-E-01	FLOW CONTROL STATION PLAN - PROPOSED
162.	5-E-01	ODOR CONTROL SYSTEM ENLARGED PLAN - PROPOSED
163.	5-E-11	ODOR CONTROL AREA EQUIPMENT RACK & SCHEDULES - PROPOSED
164.	6-E-01	ELECTRICAL BUILDING AREA PLAN - PROPOSED
165.	6-E-02	ELECTRICAL BUILDING EQUIPMENT PLAN - PROPOSED
166.	6-E-03	ELECTRICAL BUILDING GROUNDING PLAN - PROPOSED
167.	6-E-04	ELECTRICAL BUILDING LIGHTING & POWER PLAN - PROPOSED
168.	6-E-10	ELECTRICAL BUILDING SCHEDULES - PROPOSED
169.	6-E-11	ELECTRICAL BUILDING MCC-1 ONE LINE DIAGRAM - PROPOSED
170.	6-E-12	TYPICAL DRY WEATHER PUMP MCC CONTROL DIAGRAM
171.	6-E-13	DRY WEATHER BACKUP FLOAT CONTROL PANEL SCHEMATIC DIAGRAM
		HVAC
172.	2-H-1	SYMBOL & LEGEND - HVAC
173.	2-H-2	HVAC GENERAL NOTES
174.	2-H-3	INTERMEDIATE LEVEL - HVAC DEMOLITION
175.	2-H-4	UPPER LEVEL - HVAC DEMOLITION
176.	2-H-5	LOWER LEVEL - HVAC PLAN
177.	2-H-6	INTERMEDIATE LEVEL - HVAC PLAN
178.	2-H-7	UPPER LEVEL - HVAC PLAN
179.	2-H-8	HVAC SECTIONS
180.	2-H-9	HVAC SCHEMATIC
181.	2-H-10	HVAC SCHEDULES I
182.	2-H-11	HVAC SCHEDULES II
183.	2-H-12	HVAC DETAILS
		INSTRUMENTATION
184.	0-I-01	LEGENDS & SYMBOLS SHEET 1
185.	0-I-02	LEGENDS & SYMBOLS SHEET 2
186.	1-I-01	DRY WEATHER STATION P&ID
187.	1-I-02	CHEMICAL STORAGE TANKS P&ID
188.	1-I-03	CHEMICAL METERING P&ID
189.	1-I-04	ODOR CONTROL SYSTEM P&ID
190.	1-I-05	DRY WEATHER CONTROL CABINET EQUIPMENT LAYOUT & SCHEDULE
191.	1-I-06	DRY WEATHER CONTROL CABINET EQUIPMENT LAYOUT
192.	1-I-07	DRY WEATHER CONTROL PANEL CONTROL WIRING DIAGRAM - I
193.	1-I-08	DRY WEATHER CONTROL PANEL CONTROL WIRING DIAGRAM - II
194.	1-I-09	DRY WEATHER CONTROL PANEL CONTROL WIRING DIAGRAM - III
195.	1-I-10	DRY WEATHER PUMP 1 CONTROL WIRING DIAGRAM
196.	1-I-11	DRY WEATHER PUMP 2 CONTROL WIRING DIAGRAM
197.	1-I-12	DRY WEATHER PUMP 3 CONTROL WIRING DIAGRAM
198.	1-I-13	DRY WEATHER PUMP 4 CONTROL WIRING DIAGRAM
199.	1-I-14	DRY WEATHER BACKUP FLOAT CONTROL PANEL WIRING DIAGRAM
200.	1-I-15	CHEMICAL STORAGE CONTROL WIRING DIAGRAM
201.	1-I-16	CHEMICAL METERING CONTROL WIRING DIAGRAM
202.	1-I-17	DRY WEATHER PLC COMMUNICATION DIAGRAM
203.	2-I-01	WET WEATHER STATION P&ID SHEET 1
204.	2-I-02	WET WEATHER STATION P&ID SHEET 2
205.	2-I-03	WET WEATHER CONTROL CABINET EQUIPMENT LAYOUT & SCHEDULE
206.	2-I-04	WET WEATHER CONTROL CABINET EQUIPMENT LAYOUT
207.	2-I-05	WET WEATHER CONTROL PANEL CONTROL WIRING DIAGRAM - I
208.	2-I-06	WET WEATHER CONTROL PANEL CONTROL WIRING DIAGRAM - II
209.	2-I-07	WET WEATHER CONTROL PANEL CONTROL WIRING DIAGRAM - III
210.	2-I-08	WET WEATHER PUMP 1 CONTROL WIRING DIAGRAM
211.	2-I-09	WET WEATHER PUMP 2 CONTROL WIRING DIAGRAM
212.	2-I-10	WET WEATHER PUMP 3 CONTROL WIRING DIAGRAM
213.	2-I-11	WET WEATHER PUMP 4 CONTROL WIRING DIAGRAM
214.	2-I-12	WET WEATHER PUMP 5 CONTROL WIRING DIAGRAM
215.	2-I-13	WET WEATHER PUMP 6 CONTROL WIRING DIAGRAM
216.	2-I-14	WET WEATHER PUMP 7 CONTROL WIRING DIAGRAM
217.	2-I-15	WET WEATHER PUMP 8 CONTROL WIRING DIAGRAM
218.	2-I-16	WET WEATHER BACKUP FLOAT CONTROL PANEL WIRING DIAGRAM
219.	2-I-17	WET WEATHER FLOW CONTROL STATION CONTROL WIRING DIAGRAM
220.	2-I-18	WET WEATHER PLC COMMUNICATION DIAGRAM

QUIDDITY
Texas Board of Professional Engineers and Land Surveyors Reg. No. F-23290
6330 West Loop South, Suite 150 • Bellaire, TX 77401 • 713.777.5337

JOB NO: 00050-0099-01 DATE: 1/19/2026

APPROVED BY:

DATE: MAY 2026

DESIGNED BY: MBMITCHELL

DRAWN BY: JMMUSSO

SURVEYED BY:

FB NO. XXXXXX

INTERIM REVIEW
Not intended for construction, bidding or permit purposes.
Engineer: HARRY W. ISENSEE III, P.E.
P.E. Serial No.: 144401
Date: MAY 2026

CITY OF HOUSTON
HOUSTON PUBLIC WORKS

SCOTT STREET NO. 1 LIFT STATION REHABILITATION

GENERAL

INDEX

WBS NUMBER
R-000267-127A-4

DRAWING SCALE
AS NOTED

CITY OF HOUSTON PM
TAHA LOTIA

DWG NO. 0-G-2

SHEET NO. 2 OF 220

FOR CITY OF HOUSTON USE ONLY

K:\00050\00050-0099-01 Scott St. No. 1 Lift Station Rehabilitation - Phase II Design\2 Design Phase\CAD\MISCD-2.dwg

0 1 2 3 4 5 ORIGINAL SCALE IN INCHES FOR REDUCED PLANS

NO.	DATE	REVISIONS	APP.

GENERAL CONSTRUCTION NOTES:

1. Prior to bidding the project, the Contractor is required to visit the project sites. Contractor shall note any visible conflicts not shown in the drawings and bring to the attention of the Engineer prior to bidding the project. Should a construction conflict occur due to a visible conflict apparent at the time of bidding, all construction and engineering costs associated with the change shall be borne by the Contractor.
2. Final grade all areas of the site as shown on the paving and grading layout after completion of all other construction activities. Thoroughly clean the site to remove all construction debris such as concrete rubble, rebar, etc. Hydromulch all areas which are disturbed during construction that are not to be paved.
3. Provide isolation joints between all proposed sidewalks and all slabs, structures and pavements. Also provide isolation joints where pipes penetrate concrete slabs or pavement. Isolation joints shall be constructed as shown in the construction drawings.
4. Contractor shall comply with O.S.H.A regulations and Texas state law concerning trench safety systems.
5. Unless otherwise shown on the construction drawings, all pipe centered in walls shall have a wall flange. All wall flanges shall be cast–in–place with structural concrete or grouted in block–outs with non–shrink grout. All block–outs for through–wall piping shall be keyed, unless otherwise noted.
6. Sanitary facility clearances to potable water facilities shall follow the latest rules and regulations of the Texas Commission of Environmental Quality.
7. Contractor shall be responsible for obtaining all applicable city, county, state and federal permits.
8. The Contractor shall be fully responsible for any and all damage to the existing public or private utility lines, including but not limited to water lines, wastewater collection systems, storm sewers, gas line, telecommunication line, etc. during construction. All damages shall be repaired in accordance with City of Houston, Department of Public Works and Engineering's "Standard Construction Specifications" with latest addenda and amendments thereto, with no cost to the public and/or owner of the utility.
9. Contractor shall contact City of Houston, Department of Public Works and Engineering a minimum of 48 hours before starting work.
10. Contractor will be responsible for the coordination of power service to the lift station.
11. Contractor shall maintain site drainage during the course of construction at all times at no additional costs to the Owner whether by grading or pumping.
12. Contractor to obtain all permits required by regulation of Harris County, Texas for Flood Plain Management prior to starting construction.
13. All waste materials (hazardous and non–hazardous) shall be removed from the site and properly disposed of by the Contractor.
14. Contractor shall be responsible for protecting, maintaining, and restoring all existing facilities or any off–site areas affected by this construction project to existing or better condition, unless otherwise noted, at no additional cost to the Owner.
15. The Contractor is responsible for providing red line record drawings and O&M manuals acceptable to the Engineer at the completion of this project, as per the specifications, prior to final payment.
16. During construction, the Contractor shall maintain adequate drainage and safe access to adjacent properties, regardless of the weather conditions. Do not obstruct roadways, drainageways, sidewalks, or passageways adjacent to the construction area.
17. This project is inside the City of Houston Limits and Harris County, Texas.
18. The approximate location of existing utilities are given for reference only. Before commencing the work on this contract, the Contractor shall verify by field investigation the actual locations of all utility facilities within and adjacent to the limits of the work that may be affected by the work. Conflicts which result due to the negligence by the Contractor to locate, horizontally and vertically, existing utilities which are shown on the construction drawings, or which the Contractor has been given notice or has knowledge of, shall be the sole responsibility of the Contractor. The cost of remedial work, removal of portions of the work or extensive design changes occasioned by the failure of the Contractor to verify the location of existing utilities as described above shall be borne by the Contractor.
19. Electrical material and equipment listed approval. No electrical materials, apparatus, devices, appliances, fixtures, or equipment shall be sold or installed in the city unless they are in conformance with the provisions of this code, the laws of the State of Texas and any applicable rules and regulations issued under the authority of the stat statutes. The maker's name, trademark, or other identification symbol shall be placed on all electrical materials, apparatus, devices, appliances, fixtures, and equipment used or installed under the provisions of this code.
20. All electrical materials and equipment shall be listed and labeled for intended use and shall be included in a list published by an approved agency. Show compliance on Electrical Drawings.
21. Section 508 City of Houston Electrical Code.
19. Contractor is to contact the Texas811 at 811 or 1–800–344–8377 for location of existing facilities that may not be shown on the plans at least 2 working days prior but not more than 14 working days prior to commencement of any construction activities.
20. The Contractor shall provide concrete tankage that is free of substantial leakage and wetting of exterior surfaces.
21. The existing public roadway and onsite pavement shall be maintained in accessible and usable condition during the course of the work. Vehicular access to the existing lift stations must be maintained at all times. The Contractor shall repair damage to the road from construction traffic.
22. During construction, the Contractor shall maintain pedestrian and vehicular access to all adjacent properties. Access shall be maintained during all weather conditions. Any temporary facilities needed to maintain roadway accessibility during construction operations shall be incidental to the contract.
23. All existing structures, sidewalks, stairways, handrail, slabs, piping, and piping supports that must be disturbed shall be replaced and/or rebuilt to pre–construction condition or better.
24. The Contractor shall provide isolation kits between mechanical elements constructed and all dissimilar metals.

SANITARY SEWER NOTES:

1. All sewers shall be constructed in accordance with the City of Houston "Standard Construction Specifications for Wastewater Collection Systems, water lines, storm drainage, street paving, and traffic"and all current amendments thereto and be subject to a standard Exfiltration test. Tests are to be performed on the total footage of sewer line included in the project. Requirements of Texas Administrative Code, Title 30 Chapter 317, "Design Criteria for Sewerage Systems"shall govern where conflicts exist except where city requirements are more stringent.
2. All manholes are to be per City of Houston standard details drawing numbers 02082–01, 02082–02, 02082N–02, 02082–03, and 02082N–03 unless otherwise noted. Use 2010 version as applicable.
3. Sanitary sewer manholes will have bedding and backfill per City of Houston standard details drawing No. 02317–08 unless otherwise noted.
4. Sanitary sewer pipe 6"and smaller shall be schedule 40 pvc. sanitary sewer pipe 8" and larger shall be SDR–26 PVC.
5. All SDR–26 PVC pipe shall meet ASTM specification D3034 and use "Full Bodied" SDR–26 PVC fittings with appropriate adapters and shall have a cell classification of 12364–B as defined in ASTM D–1784 and shall have DIP size OD and rubber gasket bell–and–spigot type joint ends, unless otherwise noted.
6. AWWA C–900 DR–18 PVC pipe uses either AWWA C900 DR–18 PVC fittings or DIP fittings.
7. All sanitary sewer lines under proposed or future pavement and to a point one (1) foot back of all proposed or future curbs shall have bedding per City of Houston standard details drawing numbers 02317–01, 02317–02, or 02317–03 as applicable, with 1 ½sack cement/cy stabilized sand backfill up to the bottom of the pavement subgrade. 100 psi performance results are still required.
8. All sanitary sewers crossing water lines with a clearance between 12 inches and 9 feet shall have a minimum of one 18' joint of 150 psi ductile iron or (green) c900 PVC pipe meeting ASTM specification D2241 centered on water line. When water line is below sanitary sewer provide minimum 2 foot separation.
9. Contractor shall provide a minimum horizontal clearance of 9' feet between water lines and sanitary sewer manholes and lines.
10. Sanitary sewer manhole rims outside of proposed paving will be set 3"– 6"above the surrounding level finished grade after paving with sloped backfill added for storm water to drain away from manhole rim.
11. In wet stable trench areas use bedding per city of houston standard details drawing number 02317–02 (2002).
12. Deflection Test: Deflection tests shall be performed on all flexible and semi–rigid sewer pipe. the test shall be conducted after the final backfill has been in place at least 30 days. No pipe shall exceed a deflection of 5% if the deflection test is to be run using a rigid Mandrel, it shall have a diameter equal to 95% of the inside diameter of the pipe. The test shall be performed as per 30 TAC 317.2 latest amendment and without mechanical pulling devices. No ball–type Mandrel is allowed.
13. Infiltration, Exfiltration or Low–Pressure Air Test: Either of the following tests shall be performed as per TAC, Title 30 317.2 within the specified tolerances on all gravity sewers.

A. Onfiltration or exfiltration test: total leakage as determined by a hydrostatic head test shall not exceed 50 gallons per inch diameter per mile of pipe per 24 hours at a minimum test head of two (2) feet.

B. Low–pressure air test: perform test according to UNI–B–6–90 or other appropriate procedures. for sections of pipe less than 36"(inch) average inside diameter, the minimum allowable time for pressure drop from 3.5 p.s.i.g. to 2.5 p.s.i.g. shall be as follows:
18"1020 seconds or 7.693(L) for test lengths greater than 133'

Where L = length of line of same pipe size in feet.

14. "SAN. S.E." INDICATES "SANITARY SEWER EASEMENT"
15. For sanitary manhole (MH) rims set inside of or @ curb & gutter pavement and/or below T.C., MH rims will be set flushed with an abutting paved service. The (Valcun, Neenah or equal) heavy duty bolted solid MH cover shall be properly (and securely) attached and sealed to its compatible gasketed frame by using both a neoprene gasket and (at least) 4 counter–sunk hex–head coarse threaded 1/2"–13 unc stainless steel bolts. The heavy duty frame mh cover shall be solid (no air holes). Said frame shall be both embedded into the mh's top also securely anchored to the underlying mh structure with either securely attached embedded anchor bolts or the concrete mh's exposed rebars welded to the frame or other equally secured methods to prevent mh cover/frame blow–offs/ejections.
14. "San. S. E."indicates "Sanitary Sewer Easement"
15. For sanitary manhole (MH) rims set inside of or @ curb & gutter pavement and/or below T.C., MH rims will be set flushed with an abutting paved surface. The (Valcun, Neenah or equal) heavy duty bolted solid MH cover shall be properly (and securely) attached and sealed to its compatible gasketed frame by using both a Neoprene Gasket and (at least) 4 counter–sunk hex–head coarse threaded ½"–13 UNC stainless steel bolts. The heavy duty frame MH cover shall be solid (no air holes). Said frame shall be both embedded into the MH's top also securely anchored to the underlying MH structure with either securely attached embedded anchor bolts or the concrete MH's exposed rebars welded to the frame or other equally secured methods to prevent MH cover/frame blow–offs/ejections.
16. Maintain 12–inch minimum clearance between all sanitary sewers, storm sewers and culverts unless otherwise noted.
17. Sanitary sewer manholes shall be sealed unless otherwise noted. Air–release manholes shall not be sealed.
18. Manhole rims are to be set at the elevations shown on the plans initially. After paving and grading is completed, rims are to be adjusted to four (4) to six (6) inches above final grade and back–dressed with dirt to provide drainage away from the manhole. Manholes located within proposed pavement shall have a rim elevation equal to the road elevation.
19. If wet sand is encountered in the field, use special bedding per City of Houston DWG 02317–01, 02317–02 and as directed by the Engineer.
20. Perform CCTV survey after post installation of all new sanitary sewer lines and submit the videos to the City of Houston according to City of Houston guidelines.
21. All sewer lines shall be tested in accordance with the contract specifications. Contractor to furnish test plugs and risers (no separate pay).
22. For all PVC or DIP pipe, use manhole waterstop gasket and clamp assembly at manhole connections to new manholes (no separate pay). Connection to existing manholes shall consist of breaking out an opening, installing a flexible connection (grout in place with a water stop around the perimeter) and use of a manhole waterstop gasket and clamp assembly of manhole connections.

QUIDDITY
Texas Board of Professional Engineers and Land Surveyors Reg. No. F-23290
6330 West Loop South, Suite 150 • Bellaire, TX 77401 • 713.777.5337

JOB NO: 00050–0099–01 DATE: 1/19/2026

APPROVED BY:

DATE: MAY 2026

DESIGNED BY: MBMITCHELL

DRAWN BY: JMMUSSO

SURVEYED BY:

FB NO. XXXXXX

INTERIM REVIEW
Not intended for construction, bidding or permit purposes.
Engineer: HARRY W. ISENSEE III, P.E.
P.E. Serial No.: 144401
Date: MAY 2026

CITY OF HOUSTON
HOUSTON PUBLIC WORKS

SCOTT STREET NO. 1 LIFT STATION REHABILITATION

GENERAL

GENERAL CONSTRUCTION NOTES SHEET 1 OF 2

WBS NUMBER	FOR CITY OF HOUSTON USE ONLY
R–000267–127A–4	
DRAWING SCALE	
AS NOTED	
CITY OF HOUSTON PM	
TAHA LOTIA	
DWG NO. 0–G–3	
SHEET NO. 3 OF 220	

K:\00050\00050-0099-01 Scott St. No. 1 Lift Station Rehabilitation - Phase II Design\2 Design Phase\CAD\MISC\D-2.dwg

0 1 2 3 4 5 ORIGINAL SCALE IN INCHES FOR REDUCED PLANS

INSPECTION NOTES:

1. A field demonstration of the system and equipment shall be verified by the City of Houston Wastewater group before the start of the seven (7) day pump test. Wastewater will also inspect duct banks before the concrete is poured.
2. The CIty of Houston Wastewater group shall be given 24 to 72 hours prior notice to needing any inspections.

WATER LINES:

1. Water lines shall be constructed in accordance with the latest City of Houston infrastructure design manual, standard specification, and construction details.
2. All water lines under proposed or future paving and to a point of one (1) foot back of all proposed or future curbs shall be encased in bank sand to 12" over pipe and backfilled with cement stabilized sand to within one (1) foot of subgrade.
3. All water line and sewer line crossings shall be constructed per City of Houston and TECQ regulations.
4. All water valves shall be supplied and INS talled in accordance with the latest edition of AWWA C-500 and shall be of the resilient seat type.
5. All water lines to be disinfected in conformance with AWWA C-651 and the Texas State Department of Health. At least one bacteriological sample shall be collected for every 1,000 linear feet of water line and shall be repeated if contamination persists.
6. All below grade valves shall be gasketed, hub-end gate valves with a cast iron box, except where flanges are called out on the plans.
7. Hydrostatic Testing: All water pipe shall be tested for leakage in accordance with the latest City of Houston standard construction specifications. Tests are to be performed on the entire footage of water pipe line included in the project.
8. All water lines to have 4' minimum cover to finished grade and minimum 12" clearance to other utilities at crossing unless otherwise noted on plans. All water line installed over 8' deep shall utilize restrained joint fittings.
9. Contractor shall keep water pipe clean and capped (or otherwise effectively covered) open pipe ends to exclude insects, animals or other sources of contamination from unfinished pipe lines at times when construction is not in progress.

GRADING NOTES:

1. General Contractor and all Subcontractors shall verify the suitability of all existing and proposed site conditions including grades and dimensions before starting construction. The Engineer shall be notified immediately of any discrepancies.
2. Before starting construction, Contractor shall verify benchmark elevation and notify engineer if any discrepancy and/or conflict is found.
3. Contractor shall ensure there is positive drainage from the proposed buildings and no ponding in paved areas, and shall notify engineer if any grading discrepancies are found in the existing and proposed grades prior to placement of pavement or utilities.
4. Contractor shall protect all manhole covers, valve covers, vault lids, fire hydrants, power poles, guy wires, and telephone boxes that are to remain in place and undisturbed during construction.
5. All existing concrete paving, sidewalk, and curb demolition shall be removed and disposed of by Contractor. Disposal shall be at an approved off-site, lawful location, unless directed otherwise by the Owner.
6. Contractor to provide any additional select fill for final grading of site.
7. Areas that are to receive fill will be stripped to a depth of three-inches (3"). Strippings shall be hauled-off and disposed of at an approved location off-site. Any grading fill shall be select fill per Note 6 and placed and compacted per Note 8.
8. Fill shall be placed in maximum loose lifts of eight-inches (8") or less and compacted to 95% of maximum density at optimum to +3% moisture content as determined by AASHTO Test Method T-99. **A non woven geotextile fabric shall be installed between each layer of backfill.**

SIGNAGE NOTES:

1. Provide identification numbers for each pump within the Lift Station sites which correspond to the identification numbers in the motor control center, PLC, and control panel. These numbers shall be located on the vertical discharge pipes of the pumps or on the concrete top slab. The numbers shall consist of one coat of black polyurethane paint applied with a stencil. Number height shall be at least four-inches (4"). This applies to all proposed equipment and existing equipment at both Lift Station sites.
2. Label and coat with proper color code all lines including an arrow indicating flow direction. Labels shall consist of one coat of black polyurethane paint applied with a stencil. Letter height shall be a minimum of four inches (4"). Apply labels in a prominent location as directed by the Engineer. As a general rule, labels shall be provided for each pipe where it enters or exits a structure or pump. This shall be done for all proposed and existing pipes at both Lift Station sites.

MANHOLE / INLET PROTECTION NOTES:

1. Inlets and manholes that are not complete and/or are subject to conveying storm water flows are to be protected to prevent sediment from entering the proposed or existing storm sewer system.
2. Protection shall consist of one layer of 3x12-inch oak timbers, one (1) inch apart, covered with one layer of woven polypropylene or polyester filter fabric (Exxon GTF 100S, Phillips SUPAC 4WS[UV] or approved equal) held in place with 1/2" staples. Timbers shall be held in place with two (2) 2x4's nailed securely to each timber over the filter fabric. The filter fabric shall extend beyond the perimeter of the oak timbers as to ensure one (1) foot of bury between the manhole or inlet and the surrounding soil as shown.
3. Filter fabric to be cleaned or replaced when it ceases to function properly or as directed by the Engineer.
4. Contractor may submit plans for alternate methods of protection. These alternate methods must be approved prior to use in the field.
5. No separate payment shall be made for inlet and manhole protection. Include the cost in the unit price for the inlets and manholes.

UTILITY CONSTRUCTION NOTES:

1. During construction, the Contractor shall maintain adequate drainage and safe access to adjacent properties, regardless of the weather conditions. Do not obstruct roadways, drainageways, sidewalks, or passageways adjacent to the construction area.
2. When trench condition warrants the use of dewatering systems, their use shall be requested by the Contractor and approved by the Engineer.
3. Contractor shall remove all mud, dirt and debris deposited or dropped on existing pavement due to his construction activity daily. Material that is hazardous to traffic shall be removed immediately.
4. Contractor shall protect all trees adjacent to work area. No trees shall be removed without permission of the City.
5. The Contractor shall be responsible for safeguarding and protecting all material and equipment stored on the job site. The Contractor shall be responsible for the storage of materials in a safe and workmanlike manner to prevent injuries, during and after working hours, until project acceptance.
6. The Contractor shall provide sheeting, shoring and bracing necessary to protect workmen and existing utilities during all phases of construction, as may be required by O.S.H.A., federal, state and local laws, codes and ordinances.
7. The Contractor shall be fully responsible for any and all damage to the existing public or private utility lines, including, but not limited to, water lines, wastewater collection systems, storm sewers, backslope interceptors, irrigation lines, electrical lines, and material and property damages during construction. All damages, relocation, or replacement of existing utilities shall be repaired in accordance with the specifications, details, and requirements of the utility's Owner.
8. Project staking and establishment of control points will be provided by the Owner or their representative. Alignment, centerline curve data, and stationing to be determined from approved, recorded subdivision plat or road right-of-way. The Contractor will be responsible for coordinating this work with the field project representative.
9. The Contractor shall return all existing paving and driveways to original or better condition at no additional cost to the owner unless otherwise noted or specifically called out as a pay item.

DRY WEATHER LIFT STATION SHUT-DOWNS, PHASING, BYPASS, AND COORDINATION NOTES:

1. Lift Station shut-downs shall be pre-approved by the Engineer and Operator, and shall be scheduled with both at least 72 hours in advance. Bypass pumping and piping shall be provided by the Contractor, and shall be considered incidental to the work. Submit bypass pumping plan to Engineer for approval a minimum of thirty (30) calendar days prior to installation.
2. The Contractor shall notify the Engineer of, and be present for, the start-up of all new equipment, and shall be responsible for proper start-up procedures as recommended by the Manufacturer, and called for in the specifications. A Manufacturer Representative shall be present for start-up or pre-start-up inspection as required by the specifications, and as recommended by the Manufacturer for each equipment item. No equipment will qualify for substantial completion until Contractor meets all conditions listed in the Special Conditions, including submitting start-up reports to the Engineer. Within 24 hours of completion of grit removal from the lift station, Contractor shall contact the Engineer to inspect the Lift Station.
3. Upon initial shut down of the Lift Station, the Operator shall be responsible for removal of bulk liquid, grit, rags, solid and semi-solid material to within six-feet (6') of the wet well floor. All subsequent dewatering operations (including removal of last two-feet (2') of material, and removal of rainwater) shall be the responsibility of the Contractor at no additional cost to the Owner.
4. The Contractor shall perform all start-up and shut-down operations of all proposed lift station equipment. The Operator shall perform all start-up and shut down operations of all existing Lift Station equipment.
5. The Contractor shall provide and install all the plugs, blocks, restraints, pumps, controls, monitoring, piping and labor required for controlling and diverting all the wastewater that flows into the Lift Station as necessary for the work and preventing interruption of service, surcharging the system and/or overflowing the system. The existing force main may be utilized for bypass pumping purposes. A minimum of one (1) duty pump and one (1) spare pump shall be used. All equipment for bypass pumping shall be located as shown on the plans.
6. The Contractor shall coordinate the duration of the bypass pumping system with all Subcontractors to ensure the appropriate length of bypass pumping is supplied. The Owner will not be responsible for any extended bypass pumping required due to lack of Contractor / Subcontractor coordination for all electrical, civil, and mechanical improvements.
7. Lift station shall not be out of service unless bypass pumping is provided and installed as specified.

CITY OF HOUSTON HOUSTON PUBLIC WORKS STREET & BRIDGE CONSTRUCTION NOTES

1. Fill Areas on plans shall be filled in layers not exceeding 8" in depth and each compacted to not less than 95% standard proctor density prior to installation of water line and fill area shall be seeded and fertilized within ten working days.
2. Utility contractor shall provide temporary silt barrier fence on all non-curbed inlets which will remain in place after underground contract is complete.
3. Contractor shall provide silt barrier fence on all stage 1 curb inlets..
4. Existing payments, curbs, driveways, and sidewalks damaged or removed during construction shall be replaced to City of Houston standards, with latest addenda and amendments thereto.
5. Condition of the road and/or right-of-way upon completion of job shall be as good as or better than prior to starting work
6. Exposed 15" of reinforcing steel at proposed sawed joint if no reinforcing steel exists, use horizontal dowels. Horizontal dowels shall be #6 bars 24" long 24" c-c drilled and embedded 8" into the center of the existing slab with "PO ROC" or equal.
7. Wheelchair ramps shall be installed in accordance with City of Houston standards at all intersections where sidewalks exist and the existing curb or sidewalk is damaged or removed during construction.
8. Prior to street construction. The contractor shall contact Houston Public Works at (Phone) 832-394-9578 and comply with all requirements for the issuance of necessary permits/work orders for street construction.
9. Double reflectorized blue traffic markers shall be placed 6-inches offset of the centerline of all fire hydrant locations by the paving contractor. Hydrants located at intersections shall have a button placed on each street.

CITY OF HOUSTON HOUSTON PUBLIC WORKS TRAFFIC NOTES

Contractor or owner shall submit traffic control plans with the Mobility Permit application. The plans shall be drawn to scale and sealed by a licensed professional engineer in the state of Texas.

The general notes that shall be included on the traffic control plan can be found in Chapter 15 (15.12 Traffic Control Plan) of the City of Houston's (City) Infrastructure Design Manual (IDM). Below are several key notes from the IDM to be aware of:

1. The contractor shall provide and install traffic control devices in conformance with Part VI of the Texas Manual of Uniform Traffic Control Devices (TMUTCD) latest edition with revisions during the entire construction period.
2. No work shall be performed in residential areas from 7:00PM to 7:00AM.
3. Contractor shall maintain approved number of lanes of traffic in each direction during construction working hours. Traffic Control plans shall include one-way and/or detour plans. Contractor shall maintain ADA complaint pedestrian access to bus stops and adequate bus access to the bus stop.
4. Contractor shall cover open pavement excavations for minor utility work with anchored steel plates during non-working hours, open lanes for normal traffic flow when feasible.
5. Contractor shall secure roadway/sidewalk/street/bicycle facilities permits as described in City of Houston ordinance, Chapter 40-Streets & sidewalks, section 40-361 from Houston Pemitting Center (Mobility Permit Section Section at http://geohub.houstontx.gov) before implementing the traffic control plan. The application must be submitted at least ten business days prior to the implementation of the traffic control plan and/or beginning construction work. The Contractor shall provide traffic control plans, construction sequencing, and construction schedule with the application.
6. Contractor shall have approved traffic control plan and permit at the job site for inspection at all times.
7. Access to driveways adjacent to the construction work zone shall be maintain at all times as much as possible. Additional cones and/or delineators may be required to delineate the driveway access route through the construction work zone. A minimum of one travel lane shall be maintained across the driveway, unless prior written approval is obtained from the City of Houston.
8. Additional off duty police officers/flaggers may be requested to direct traffic when lanes are blocked at the direction of the City even if they are not specifically identified on the project plans.

NO.	DATE	REVISIONS	APP.

QUIDDITY
Texas Board of Professional Engineers and Land Surveyors Reg. No. F-23290
6330 West Loop South, Suite 150 • Bellaire, TX 77401 • 713.777.5337

JOB NO: 00050-0099-01 DATE: 1/19/2026

APPROVED BY:

DATE: MAY 2026

DESIGNED BY: MBMITCHELL

DRAWN BY: JMMUSSO

SURVEYED BY:

FB NO. XXXXXX

INTERIM REVIEW
Not intended for construction, bidding or permit purposes.
Engineer: HARRY W. ISENSEE III, P.E.
P.E. Serial No.: 144401
Date: MAY 2026

CITY OF HOUSTON
HOUSTON PUBLIC WORKS

SCOTT STREET NO. 1
LIFT STATION REHABILITATION
GENERAL

GENERAL CONSTRUCTION NOTES
SHEET 2 OF 2

WBS NUMBER	FOR CITY OF HOUSTON USE ONLY
R-000267-127A-4	
DRAWING SCALE	
AS NOTED	
CITY OF HOUSTON PM	
TAHA LOTIA	
DWG NO. 0-G-4	
SHEET NO. 4 OF 220	

K:\00050\00050-0099-01 Scott St. No. 1 Lift Station Rehabilitation - Phase II Design\2 Design Phase\CAD\MISCD-2.dwg

0 1 2 3 4 5

ORIGINAL SCALE IN INCHES FOR REDUCED PLANS

EQUIPMENT ABBREVIATIONS:

ABWF	AUTOMATIC BACKWASH SAND FILTER
AF	AIR INLET FILTER
AL	AIR LIFT
ASV	AUTOMATIC SWITCHOVER VALVE
BC	BELT CONVEYOR
BP	BELT PRESS
CC	CALIBRATION COLUMN
CFP	CENTRIFUGAL PUMP
CLR	CHLORINATOR
CP	CHOPPER PUMP
CRB	CARBON SCRUBBER
DA	DECANT ARM
DDP	DOUBLE DISC PUMP
DF	DISK FILTER
DP	DIAPHRAGM PUMP
DWT	DOUBLE WALL STORAGE TANK
EFAN	EXHAUST FAN
EWS	EMERGENCY EYEWASH & SHOWER
FBD	FINE BUBBLE DIFFUSER
FLT	FLOATS
GEN	GENERATOR
GIP	GAS INDUCTION PUMP
GLS	GAS LEAK SENSOR
GR	GRINDER
HEP	HORIZONTAL END-SUCTION PUMP
HST	HOIST
INJ	INJECTOR
JIB	JIBB CRANE
LC	LOAD CELL
LCP	LOCAL CONTROL PANEL
LVR	LOUVER
MCS	MECHANICAL COARSE SCREEN
MFS	MECHANICAL FINE SCREEN
MR	MONORAIL
MS	MANUAL SCREEN
MSB	MULTI-STAGE CENTRIFUGAL BLOWER
MXR	MIXER
PBU	POLYMER BLENDING UNIT
PCP	PROGRESSIVE CAVITY PUMP
PD	PULSATION DAMPENER
PSP	PERISTALTIC PUMP
RCTW	RECTANGULAR WEIR
RDT	ROTARY DRUM THICKENER
RLB	ROTARY LOBE BLOWER
RLP	ROTARY LOBE PUMP
RSB	ROTARY SCREW BLOWER
RTB	REGENERATIVE TURBINE BLOWER
RTM	ROTAMETER
RTV	ROTAMETER WITH INTEGRAL MANUAL VALVE
SC	SECONDARY CLARIFIER
SCC	SCREW CONVEYOR
SCP	SUBMERSIBLE CHOPPER PUMP
SDD	COARSE BUBBLE SINGLE DROP DIFFUSER
SFAN	SUPPLY FAN
SFR	SULFONATOR
SHTR	SPACE HEATER
SM	SUBMERSIBLE MIXER
SNP	SOLENOID PUMP
SP	NON-CLOG SUBMERSIBLE PUMP
SPP	SELF-PRIMING CENTRIFUGAL PUMP
STMX	STATIC MIXER
SWT	SINGLE WALL STORAGE TANK
TB	TRAVELING BRIDGE
TBB	TURBO BLOWER
TEFC	TOTALLY ENCLOSED, FAN-COOLED MOTOR
TLY	TROLLEY
VLF	VACUUM LIQUID FEEDER
VNW	V-NOTCH WEIR
VR	VACUUM REGULATOR
WBD	COARSE BUBBLE WIDE BAND DIFFUSER
WC	WASHER COMPACTOR
WCH	WINCH

FLUID ABBREVIATIONS:

AIR	AIR
ALUM	ALUM
BW	BACKWASH WASTE
CAKE	DEWATERED SLUDGE
CE	CLARIFIED EFFLUENT
CLG	CHLORINE GAS
CLS	CHLORINE SOLUTION
DR	DRAIN LINE
DS	DIGESTED SLUDGE
FA	FOUL AIR
FE	FINAL EFFLUENT
FRA	FRESH AIR
FTE	FILTERED EFFLUENT
FTR	FILTRATE
IR	INTERNAL RECYCLE
ML	MIXED LIQUOR
NPW	NON-POTABLE WATER
OF	OVERFLOW
POLY	POLYMER
PRM	PERMEATE
PS	POLYMER SOLUTION
PW	POTABLE WATER
RAS	RETURN ACTIVATED SLUDGE
RCW	RECLAIMED WATER
RS	RAW SEWAGE
SB	SODIUM BISULFITE
SCUM	SCUM
SDS	SULFUR DIOXIDE SOLUTION
SH	SODIUM HYPOCHLORITE (BLEACH)
SI	SCREENED INFLUENT
SN	SUPERNATE
SDG	SULFUR DIOXIDE GAS
STM	STORM SEWER
TS	THICKENED SLUDGE
WAS	WASTE ACTIVATED SLUDGE

GENERAL ABBREVIATIONS:

AC	ACRES
CL	CENTERLINE
CFM	CUBIC FEET PER MINUTE
EL	ELEVATION
FF	FINISHED FLOOR
FM	FORCE MAIN
FPS	FEET PER SECOND
FT	FEET
GAL	GALLONS
GPD	GALLONS PER DAY
GPH	GALLONS PER HOUR
GPM	GALLONS PER MINUTE
HOA	HAND OFF AUTO
HP	HORSE POWER
HR	HOUR
LF	LINEAR FEET
mA	MILLIAMP
MH	MANHOLE
OFB	OVERFLOW BAFFLE
PP	POWER POLE
ROW	RIGHT-OF-WAY
SMC	SAMPLE COCK
SAN	SANITARY SEWER
SCH	SCHEDULE
SF	SQUARE FEET
TDH	TOTAL DYNAMIC HEAD
TOB	TOP OF BANK
TOC	TOP OF CONCRETE
TOE	TOE OF SLOPE
TOS	TOP OF SLAB
TOW	TOP OF WALL
TPD	TELEPHONE PEDESTAL
TSP	TELEPHONE SERVICE POLE
TSS	TOTAL SUSPENDED SOLIDS
UFB	UNDERFLOW BAFFLE
UGE	UNDERGROUND ELECTRIC
V	VOLTS
VOL	VOLUME
WM	WATER METER

GATES, VALVES & FITTINGS ABBREVIATIONS:

3WV	THREE WAY VALVE
ARV	AIR RELEASE VALVE
AVV	AIR & VACUUM VALVE
BCV	BALL CHECK VALVE
BF	BLIND FLANGE
BFV	BUTTERFLY VALVE
BPV	BACKPRESSURE VALVE
BS	BASKET STRAINER
BV	BALL VALVE
CCV	CUSHION CHECK VALVE
DAE	DOUBLE ARCH EXPANSION JOINT
DBS	DUPLEX BASKET STRAINER
DBV	DUCKBILL VALVE
DCV	DOUBLE DISC CHECK VALVE
DDC	DOUBLE DETECTOR CHECK
DGV	DEGASSING VALVE
DJ	DISMANTLING JOINT
DV	DIAPHRAGM VALVE
EC	EXPANSION COUPLING
FAC	FLANGED ADAPTER COUPLING
FPG	FLAP GATE
FPV	FLAP VALVE
FTV	FOOT VALVE
GLB	GLOBE VALVE
GV	GATE VALVE
HB	HOSE BIBB
KGV	KNIFE GATE VALVE
MC	MECHANICAL COUPLING
MQC	MALE CAM & GROOVE QUICK COUPLING
MV	MUD VALVE
NRS	NON-RISING STEM
NV	NEEDLE VALVE
OCV	ODOR CONTROL VALVE
OSY	OUTSIDE STEM & YOKE
PG	PULL GATE
PNV	PINCH VALVE
PR	PRESSURE REDUCING VALVE
PRV	PRESSURE RELIEF VALVE
PSV	PRESSURE SUSTAINING VALVE
PV	PLUG VALVE
RPZ	REDUCED PRESSURE ZONE BACKFLOW PREVENTER
SCK	SILENT CHECK VALVE
SCV	SWING CHECK VALVE
SG	SLIDE GATE
SLC	SLEEVE COUPLING
SRV	SURGE RELIEF VALVE
SV	SOLENOID VALVE
TBA	TUBING ADAPTER
TV	TELESCOPIC VALVE
UN	UNION
VB	VACUUM BREAKER
WG	WEIR GATE
WYS	WYE STRAINER

MATERIAL ABBREVIATIONS:

AL	ALUMINUM
CFRP	CENTRIFUGALLY CAST FIBER REINFORCED PIPE
CMP	CORRUGATED METAL PIPE
DI	DUCTILE IRON
FRP	FIBERGLASS REINFORCED PLASTIC
GS	GALVANIZED STEEL
HDG	HOT DIP GALVANIZED
HDPE	HIGH DENSITY POLYETHYLENE
PE	POLYETHYLENE
PVC	POLYVINYL CHLORIDE
RC	REINFORCED CONCRETE
SS	STAINLESS STEEL
ST	STEEL
WS	WELDED STEEL

INSTRUMENTATION ABBREVIATIONS:

A/H	AUTO/HAND
DC	FULL VOLTAGE DISCONNECT
DOP	DOPPLER FLOW METER
ES	EMERGENCY STOP
H/O/A	HAND/OFF/AUTO
H/O/R	HAND/OFF/REMOTE
L/A	LOCAL/AUTO
L/C	LOCAL/COMPUTER
L/O/C	LOCAL/OFF/COMPUTER
L/O/R	LOCAL/OFF/REMOTE
L/R	LOCAL/REMOTE
LS	LOCK STOP
LSR	LASER LEVEL TRANSDUCER
MAG	ELECTROMAGNETIC FLOWMETER
N/B	NORMAL/BYPASS
O/O	ON/OFF
O/C	OPEN/CLOSE
O/C/LOS	OPEN/CLOSE/LOCK-OUT-STOP
O/C/S	OPEN/CLOSE/STOP
O/C/S/C	OPEN/CLOSE/STOP/COMPUTER
O/H/C	OPEN/HOLD/CLOSE
O/O/A	ON/OFF/AUTO
O/O/C	ON/OFF/COMPUTER
PRP	PROPELLER OR TURBINE FLOWMETER
RAD	RADAR LEVEL TRANSDUCER
R/S/L	RAISE/STOP/LOWER
S/S	STOP/START
SUB	SUBMERSIBLE LEVEL TRANSDUCER
TRM	THERMAL MASS FLOWMETER
TRT	TRANSIT TIME FLOWMETER
ULT	ULTRASONIC LEVEL TRANSDUCER

GENERAL INSTRUMENT & FUNCTION SYMBOLS:

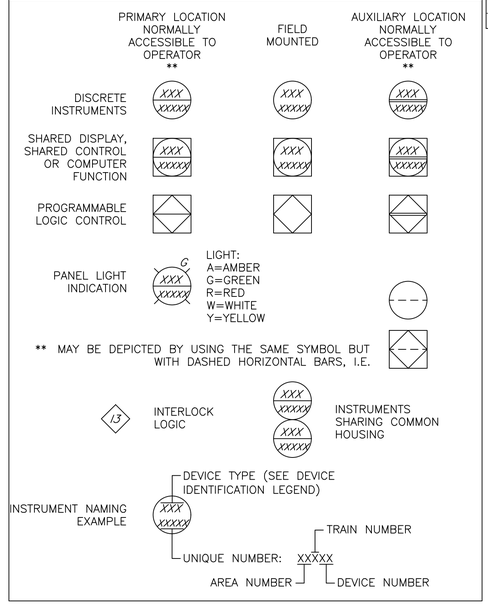

DEVICE IDENTIFICATION LEGEND:

FIRST LETTER			SUCCEEDING LETTERS		
MEASURED OR INITIATING VARIABLE		MODIFIER	READOUT OR PASSIVE FUNCTION	OUTPUT FUNCTION	MODIFIER
A	ANALYSIS		ALARM		
B	BURNER, COMBUSTION				
C	CONDUCTIVITY			CONTROL	CLOSED
D	DENSITY	DIFFERENTIAL			
E	VOLTAGE		PRIMARY ELEMENT		
F	FLOW RATE	RATIO (FRACTION)			
G	GAUGE		GLASS, VIEWING DEVICE		
H	HAND (MANUAL)				HIGH
I	CURRENT (ELECTRICAL)		INDICATE		
J	POWER	SCAN			
K	TIME, TIME SCHED.	TIME RATE OF CHANGE		CONTROL STATION	
L	LEVEL		LIGHT		LOW
M	MOTION	MOMENTARY			MIDDLE
N	INTRUSION				NORMAL
O	TORQUE		ORIFICE, RESTRICTION		OPENED
P	PRESSURE, VACUUM		POINT CONNECTION		
Q	QUANTITY	INTEGRATE, TOTALIZE			
R	RADIATION		RECORD OR PRINT		
S	SPEED, FREQUENCY	SAFETY		SWITCH	
T	TEMPERATURE			TRANSMIT	
U	MULTIVARIABLE		MULTIFUNCTION	MULTIFUNCTION	MULTIFUNCTION
V	VIBRATION			VALVE, LOUVER	
W	WEIGHT, FORCE		WELL		
X	UNCLASSIFIED	X-AXIS	UNCLASSIFIED	UNCLASSIFIED	UNCLASSIFIED
Y	EVENT, STATE OF PRESENCE	Y-AXIS		RELAY, COMPUTE CONVERT	
Z	POSITION	Z-AXIS		DRIVER, ACTUATOR, FINAL CONTROL ELEMENT	

NO.	DATE	REVISIONS	APP.

ANALYZER ABBREVIATIONS:

DO	DISSOLVED OXYGEN
NO3	NITRATE
OP	ORTHOPHOSPHATE
ORP	OXIDATION REDUCTION POTENTIAL
TSS	TOTAL SUSPENDED SOLIDS
TURB	TURBIDITY

PIPING LABELS:

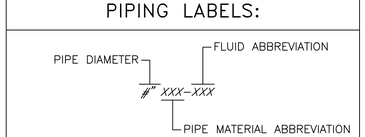

PROCESS AREAS:

0	GENERAL
1	DRY WEATHER LIFT STATION
2	WET WEATHER LIFT STATION
3	FES CHEMICAL FEED FACILITY
4	FLOW CONTROL STATION
5	ODOR CONTROL STATION
6	ELECTRICAL BUILDING NO. 1

QUIDDITY
Texas Board of Professional Engineers and Land Surveyors Reg. No. F-23290
6330 West Loop South, Suite 150 • Bellaire, TX 77401 • 713.777.5337

JOB NO: 00050-0099-01 DATE: 1/19/2026

APPROVED BY:

DATE: MAY 2026

DESIGNED BY: MBMITCHELL

DRAWN BY: JMMUSSO

SURVEYED BY:

FB NO. XXXXXX

INTERIM REVIEW
Not intended for construction, bidding or permit purposes.
Engineer: HARRY W. ISENSEE III, P.E.
P.E. Serial No.: 144401
Date: MAY 2026

CITY OF HOUSTON
HOUSTON PUBLIC WORKS

SCOTT STREET NO. 1 LIFT STATION REHABILITATION

GENERAL

GENERAL SYMBOLS & ABBREVIATIONS
SHEET 1 OF 2

WBS NUMBER	FOR CITY OF HOUSTON USE ONLY
R-000267-127A-4	
DRAWING SCALE	
AS NOTED	
CITY OF HOUSTON PM	
TAHA LOTIA	
DWG NO. O-G-5	
SHEET NO. 5 OF 220	

K:\00050\00050-0099-01 Scott St. No. 1 Lift Station Rehabilitation - Phase II Design\2 Design Phase\CAD\MISCD-2.dwg

0 1 2 3 4 5 ORIGINAL SCALE IN INCHES FOR REDUCED PLANS

NO.	DATE	REVISIONS	APP.

MISCELLANEOUS SYMBOLS:

- TYPICAL NORMALLY CLOSED VALVE
- PLUG VALVE
- BALL VALVE
- BUTTERFLY VALVE
- SILENT CHECK VALVE
- SWING CHECK VALVE
- CUSHION CHECK VALVE
- BALL CHECK VALVE
- MUD VALVE
- DUCKBILL VALVE
- DIAPHRAGM VALVE
- GATE VALVE
- DOUBLE DISC CHECK VALVE
- GLOBE VALVE
- ODOR CONTROL VALVE
- PINCH VALVE
- NEEDLE VALVE
- THREE–WAY VALVE
- FLAP VALVE
- TELESCOPIC VALVE
- FOOT VALVE
- AIR & VACUUM VALVE
- AIR RELEASE VALVE
- DEGASSING VALVE
- SOLENOID VALVE
- PRESSURE RELIEF VALVE
- SURGE RELIEF VALVE
- PRESSURE REDUCING VALVE
- PRESSURE SUSTAINING VALVE
- BACKPRESSURE VALVE
- AUTOMATIC SWITCHOVER VALVE
- VACUUM REGULATOR
- DRAIN LINE
- DRAIN INLET (SCREENED)
- DRAIN INLET (OPEN)
- VENT
- AIR INLET FILTER
- SLIDE GATE (NORMALLY OPEN)
- SLIDE GATE (NORMALLY CLOSED)
- PULL GATE (NORMALLY OPEN)
- PULL GATE (NORMALLY CLOSED)
- WEIR GATE
- OVERFLOW BAFFLE
- UNDERFLOW BAFFLE
- V–NOTCH WEIR
- RECTANGULAR WEIR
- TUBING ADAPTER
- BLIND FLANGE
- UNION
- SLEEVE COUPLING
- FLANGED ADAPTER COUPLING
- DISMANTLING JOINT
- DOUBLE ARCH EXPANSION JOINT
- AIR LIFT
- MALE CAM & GROOVE QUICK COUPLING
- DIAPHRAGM SEAL
- INLINE ANNULAR DIAPHRAGM
- SAMPLE COCK
- HOSE BIBB
- VACUUM BREAKER
- WYE STRAINER
- CORPORATION STOP
- GENERAL BACKFLOW PREVENTER
- BASKET STRAINER
- DUPLEX BASKET STRAINER
- EMERGENCY EYE WASH & SHOWER
- BLADDER TANK
- MIXER
- STATIC MIXER
- SINGLE WALL STORAGE TANK
- DOUBLE WALL STORAGE TANK
- STORAGE CONTAINER
- EXHAUST FAN
- LOUVER
- GENERAL FAN
- GENERAL CRANE
- WINCH
- TRAVELING BRIDGE CRANE
- TROLLEY
- HOIST
- GENERAL SCREEN
- WASHER COMPACTOR
- SCREW CONVEYOR
- BELT CONVEYOR
- COARSE BUBBLE SINGLE DROP DIFFUSER (PROFILE)
- SINGLE DROP COARSE AIR DIFFUSER (PLAN)
- FINE BUBBLE DIFFUSERS
- COARSE BUBBLE WIDE BAND AIR DIFFUSERS (PLAN)
- COARSE BUBBLE AIR
- FINE BUBBLE AIR
- MANHOLE
- GRINDER
- GENERAL BLOWER
- GENERAL PUMP
- HEAT TRACING
- CALIBRATION TUBE/COLUMN
- GAS INDUCTION PUMP
- INJECTOR
- ROTAMETER
- ROTAMETER WITH INTEGRAL MANUAL VALVE
- PULSATION DAMPENER
- CHEMICAL DOSAGE CONTROLLER (SEE FLUID ABBREVIATIONS)

ELECTRICAL / INSTRUMENTATION SYMBOLS:

- 120 VAC ELECTRICAL SUPPLY
- LEVEL TRANSDUCER (SEE INSTRUMENTATION ABBREVIATIONS FOR TYPE)
- FLOAT WITH PVC COATED WEIGHT
- FLOW METER (SEE INSTRUMENTATION ABBREVIATIONS FOR TYPE)
- ONLINE ANALYZER (SEE ANALYZER ABBREVIATIONS FOR TYPE)
- PROBE ANALYZER (SEE ANALYZER ABBREVIATIONS FOR TYPE)
- LOAD CELL/SCALE
- SPACE HEATER
- MOTOR
- VARIABLE SPEED MOTOR
- MOTOR WITH LOCAL LOCKOUT (SEE INSTRUMENTATION ABBREVIATIONS FOR TYPE)
- ELECTRICAL SIGNAL
- 3–PHASE POWER
- DATA COMMUNICATION
- HEAT TRACING
- ANALOG INPUT
- ANALOG OUTPUT
- DISCRETE INPUT
- DISCRETE OUTPUT

QUIDDITY
Texas Board of Professional Engineers and Land Surveyors Reg. No. F-23290
6330 West Loop South, Suite 150 • Bellaire, TX 77401 • 713.777.5337

JOB NO: 00050–0099–01 DATE: 1/19/2026

APPROVED BY:

DATE: MAY 2026

DESIGNED BY: MBMITCHELL

DRAWN BY: JMMUSSO

SURVEYED BY:

FB NO. XXXXXX

INTERIM REVIEW
Not intended for construction, bidding or permit purposes.
Engineer: HARRY W. ISENSEE III, P.E.
P.E. Serial No.: 144401
Date: MAY 2026

CITY OF HOUSTON
HOUSTON PUBLIC WORKS

SCOTT STREET NO. 1
LIFT STATION REHABILITATION
GENERAL
GENERAL SYMBOLS & ABBREVIATIONS SHEET 2 OF 2

WBS NUMBER	FOR CITY OF HOUSTON USE ONLY
R–000267–127A–4	
DRAWING SCALE	
AS NOTED	
CITY OF HOUSTON PM	
TAHA LOTIA	
DWG NO. **0–G–6**	
SHEET NO. 6 OF 220	

K:\00050\00050-0099-01 Scott St. No. 1 Lift Station Rehabilitation - Phase II Design\2 Design Phase\CAD\MISCD-2.dwg

0 1 2 3 4 5 ORIGINAL SCALE IN INCHES FOR REDUCED PLANS

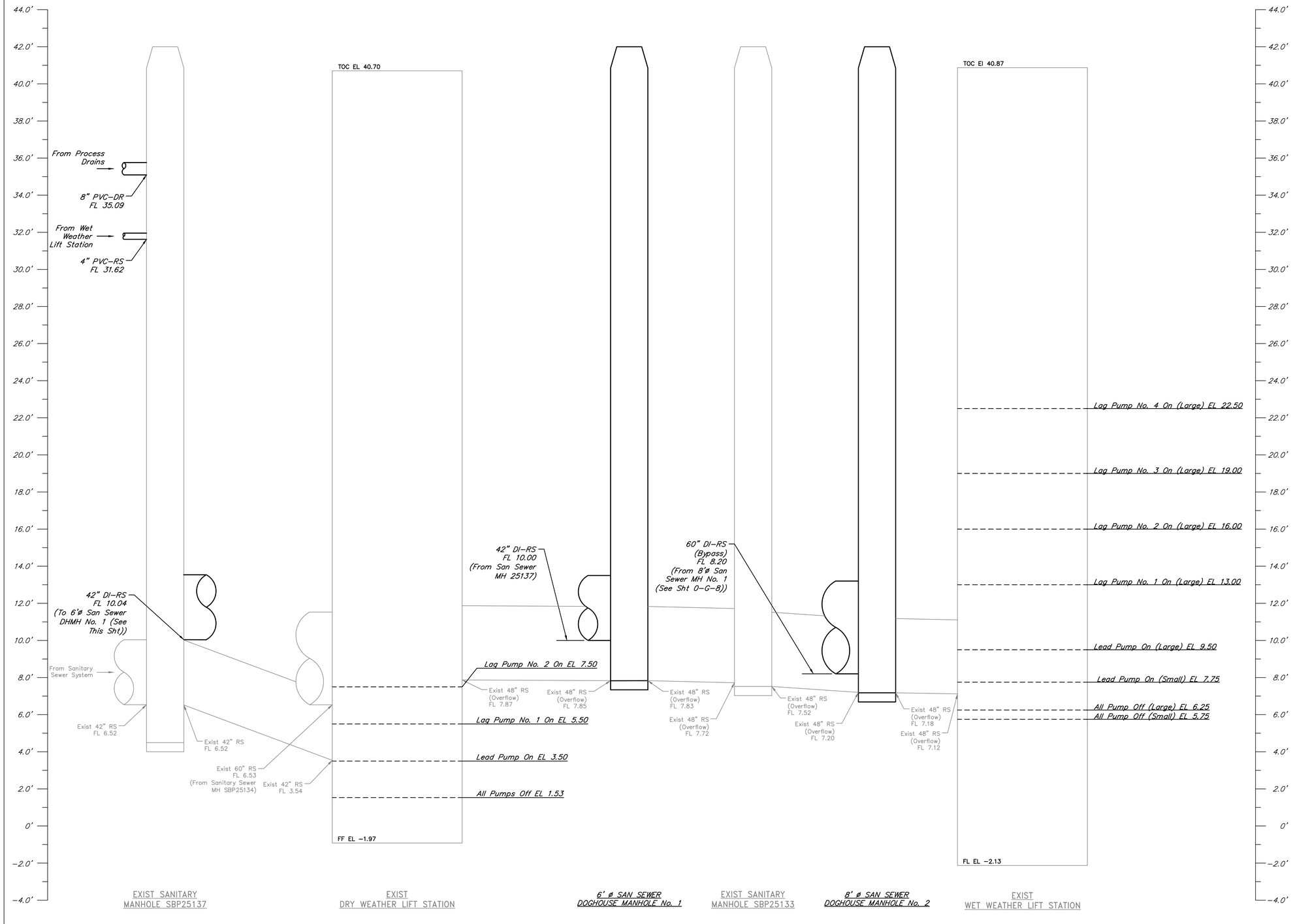

HYDRAULIC PROFILE

SCALE: HORIZONTAL: NOT TO SCALE
VERTICAL: 3/8" = 1'-0"

NO.	DATE	REVISIONS	APP.

NOTES:

1. All existing structures, dimensions, locations, elevations, and materials shown are based on City of Houston's record drawings. Contractor shall field verify existing dimensions, locations, elevations, and materials as required to complete the work and as directed by the Engineer. Field verification shall be incidental to the work.
2. Refer to Civil sheets for all Manhole Rim elevations.

QUIDDITY
Texas Board of Professional Engineers and Land Surveyors Reg. No. F-23290
6330 West Loop South, Suite 150 • Bellaire, TX 77401 • 713.777.5337

JOB NO: 00050-0099-01 DATE: 1/19/2026

APPROVED BY:

DATE: MAY 2026

DESIGNED BY: MBMITCHELL

DRAWN BY: JMMUSSO

SURVEYED BY:

FB NO. XXXXX

INTERIM REVIEW
Not intended for construction, bidding or permit purposes.
Engineer: HARRY W. ISENSEE III, P.E.
P.E. Serial No.: 144401
Date: MAY 2026

CITY OF HOUSTON
HOUSTON PUBLIC WORKS

SCOTT STREET NO. 1 LIFT STATION REHABILITATION

GENERAL

HYDRAULIC PROFILE SHEET 1 OF 2

WBS NUMBER	FOR CITY OF HOUSTON USE ONLY
R-000267-127A-4	
DRAWING SCALE	
AS NOTED	
CITY OF HOUSTON PM	
TAHA LOTIA	
DWG NO. 0-G-7	
SHEET NO. 7 OF 220	

K:\00050\00050-0099-01 Scott St. No. 1 Lift Station Rehabilitation - Phase II Design\2 Design Phase\CAD\MISCD-2.dwg

ORIGINAL SCALE IN INCHES FOR REDUCED PLANS

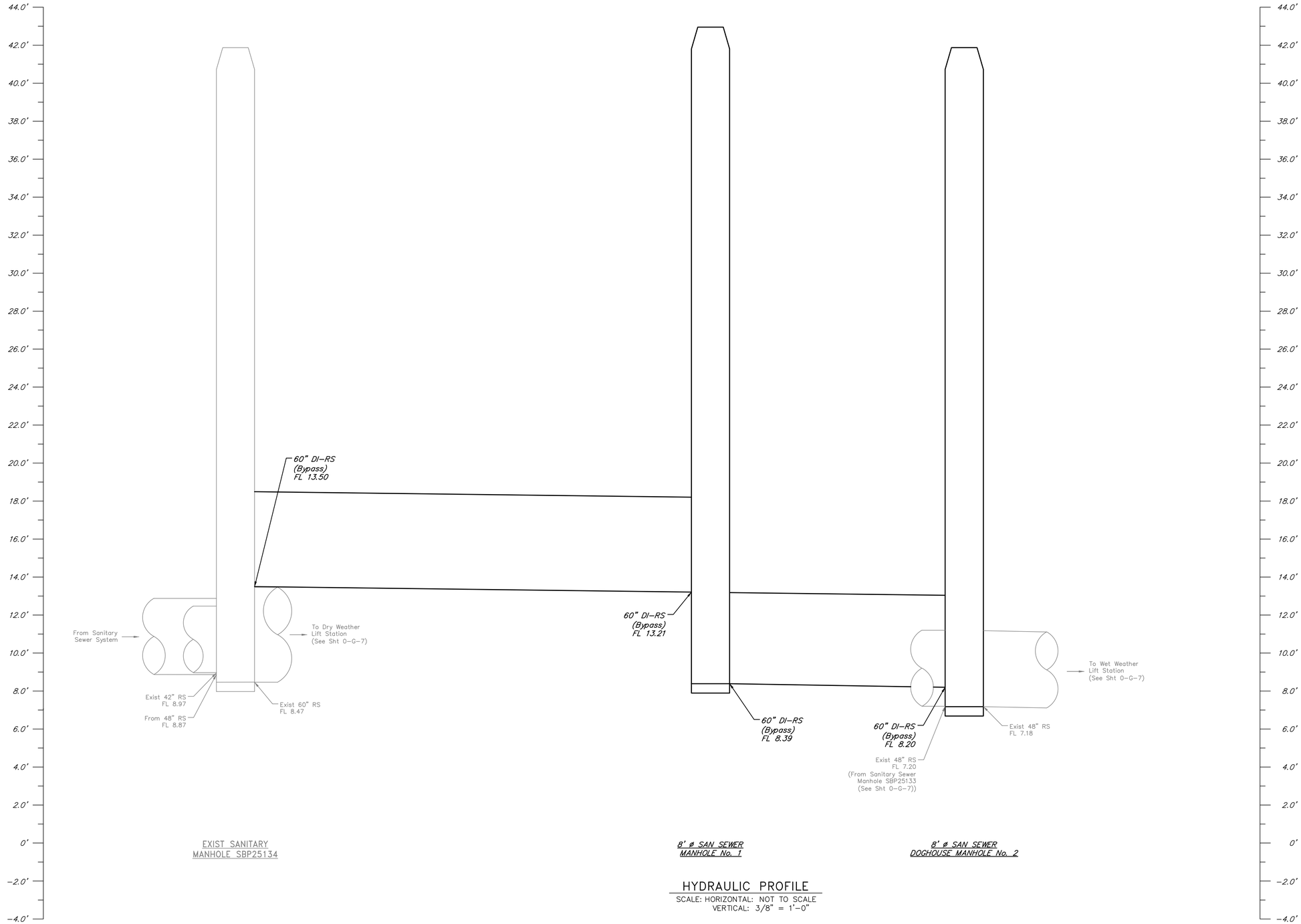

EXIST SANITARY
MANHOLE SBP25134

8' ø SAN SEWER
MANHOLE No. 1

8' ø SAN SEWER
DOGHOUSE MANHOLE No. 2

HYDRAULIC PROFILE

SCALE: HORIZONTAL: NOT TO SCALE
VERTICAL: 3/8" = 1'-0"

NO.	DATE	REVISIONS	APP.

NOTES:

1. All existing structures, dimensions, locations, elevations, and materials shown are based on City of Houston's record drawings. Contractor shall field verify existing dimensions, locations, elevations, and materials as required to complete the work and as directed by the Engineer. Field verification shall be incidental to the work.
2. Refer to Civil sheets for all Manhole Rim elevations.

QUIDDITY
Texas Board of Professional Engineers and Land Surveyors Reg. No. F-23290
6330 West Loop South, Suite 150 • Bellaire, TX 77401 • 713.777.5337

JOB NO: 00050-0099-01 DATE: 1/19/2026

APPROVED BY:

DATE: MAY 2026

DESIGNED BY: MBMITCHELL

DRAWN BY: JMMUSSO

SURVEYED BY:

FB NO. XXXXXX

INTERIM REVIEW
Not intended for construction, bidding or permit purposes.
Engineer: HARRY W. ISENSEE III, P.E.
P.E. Serial No.: 144401
Date: MAY 2026

CITY OF HOUSTON
HOUSTON PUBLIC WORKS

SCOTT STREET NO. 1
LIFT STATION REHABILITATION
GENERAL

HYDRAULIC PROFILE
SHEET 2 OF 2

WBS NUMBER	FOR CITY OF HOUSTON USE ONLY
R-000267-127A-4	
DRAWING SCALE	
AS NOTED	
CITY OF HOUSTON PM	
TAHA LOTIA	
DWG NO. O-G-8	
SHEET NO. 8 OF 220	

K:\00050\00050-0099-01 Scott St. No. 1 Lift Station Rehabilitation - Phase II Design\2 Design Phase\CAD\MISCD-2.dwg

0 1 2 3 4 5 ORIGINAL SCALE IN INCHES FOR REDUCED PLANS

STORM STRUCTURES:

Ⓐ STM. M.H.
TG=37.65'
FL=24.65' (36" N)
FL=25.95' (24" E)
FL=24.55' (36" S)

Ⓑ STM. M.H.
TG=39.23'
FL=31.73' (15" NE)
FL=34.53' (12" S)

Ⓒ STM. M.H.
TG=37.96'
FL=31.73' (24" W)
FILLED W/ TRASH

Ⓓ BB. INLET
TG=37.88'
FL=31.43' (24" N)
FL=31.43' (24" E)

Ⓔ STM. M.H.
TG=38.50'
FL=25.00' (36" N)
FL=28.80' (24" E)
FL=25.00' (36" S)
FL=29.40' (24" W)

Ⓕ BB. INLET
TG=38.05'
FL=31.35' (24" E)
FL=31.65' (24" S)

SANITARY STRUCTURES:

① SAN. M.H.
TR=37.85'
FL=28.80' (8" N)
FL=28.90' (8" E)

② SAN. M.H.
TR=39.22'
FL=28.14' (42" SE)
FL=28.04' (42" NW)

③ SAN. M.H.
TR=39.47'
FL=30.60' (42" N)
FL=30.50' (42" SE)
FL=31.00' (PIPE SET BACK W)

④ SAN. M.H.
TR=38.69'
FL=17.19' (8" N)
FL=27.29' (8" E)
FL=8.79' (42" S)
FL=9.19' (42" W)

⑤ SAN. M.H.
TR=40.69'
BOTTOM 40.05'

⑥ SAN. M.H.
TR=39.39'
FL=32.80' (42" E)
FL=30.60' (42" W)

⑦ SAN. M.H.
TR=39.78'
CLOSED
24" PIPE RUNS THROUGH
BOTTOM =32.23'

⑧ SAN. M.H.
TR=38.20'
FL=21.60' (8" N)
FL=18.50' (8" N)
FL=17.40' (8" SW)

SCALE: 1"= 20'

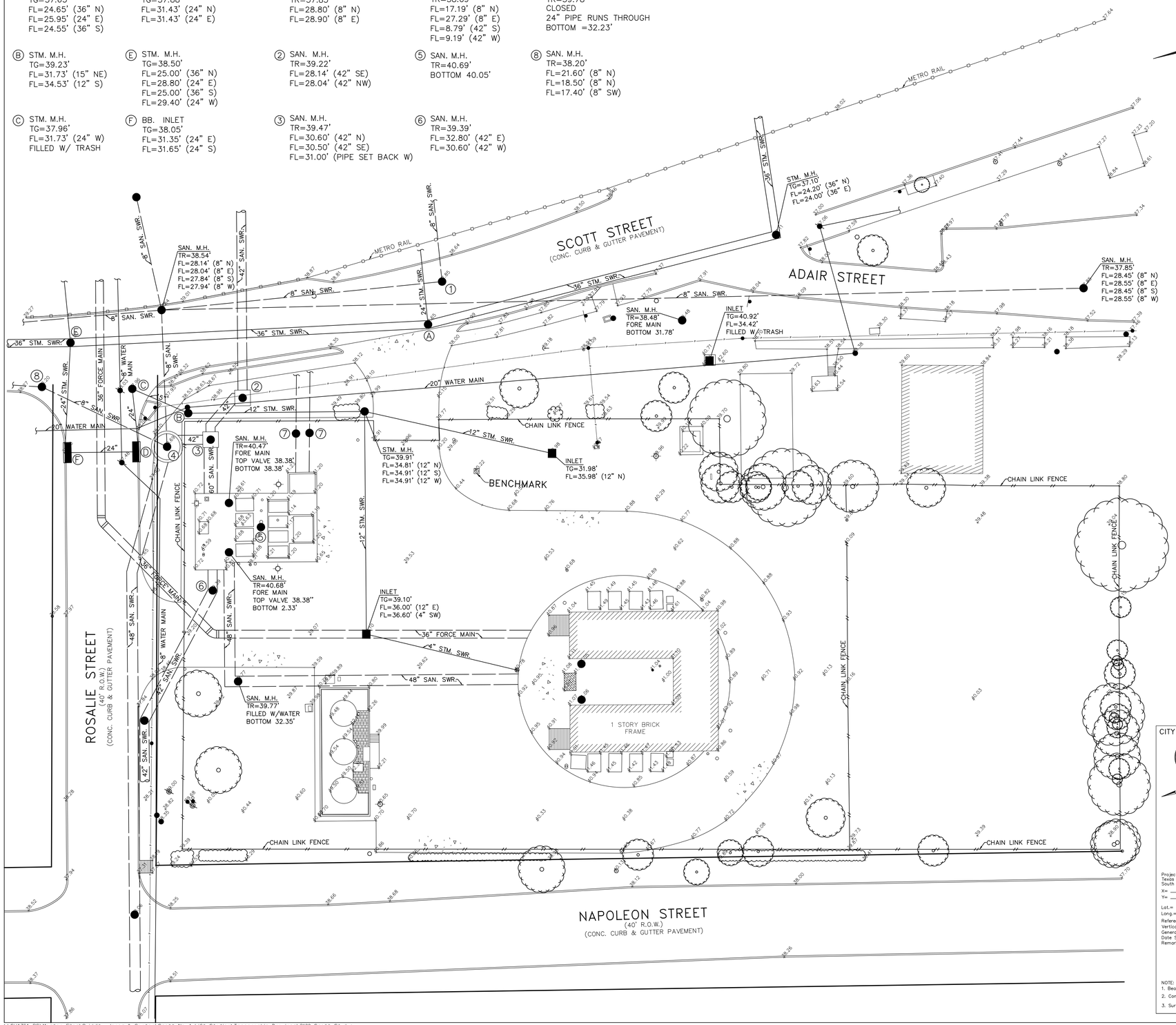

BENCH MARK
SET BRASS DISC IN CONCRETE FOR CITY OF HOUSTON MARKER NO. LOCATED INSIDE CITY OF HOUSTON LIFT STATION NO.1 AT THE INTERSECTION OF SCOTT STREET AND ROSALIE STREET.

NOTICE:
FOR YOUR SAFETY, YOU ARE REQUIRED BY TEXAS LAW TO CALL 811 AT LEAST 48 HOURS BEFORE YOU DIG SO THAT UNDERGROUND LINES CAN BE MARKED. THIS SIGNATURE DOES NOT FULFILL YOUR OBLIGATION TO CALL 811

VERIFICATION OF PRIVATE UTILITY LINES

Date:
CenterPoint Energy natural gas utilities shown.
(Gas services lines are not shown). This signature not to be used for conflict verification.
Signature Valid for six months.

Date:
CenterPoint Energy / UNDERGROUND Electrical Facilities Verification ONLY.
(Gas services lines are not shown). This signature not to be used for conflict verification.
Signature Valid for six months.

Date:
Approved for AT&T Texas / SWBT underground conduit facilities only.
Signature valid for one year.

NO.	DATE	REVISIONS	APP.

QUIDDITY
Texas Board of Professional Engineers and Land Surveyors Reg. No. F-23290
6330 West Loop South, Suite 150 • Bellaire, TX 77401 • 713.777.5337

CITY OF HOUSTON
HARRIS COUNTY, TEXAS

DATE: MARCH 2025 DGN BY:
JOB NO: 00050-0099-01 DWG BY:

NOTE: CITY SIGNATURES VALID FOR ONE YEAR ONLY AFTER DATE OF SIGNATURES

SCOTT STREET No. 1
LIFT STATION
REHABILITATION

SURVEY CONTROL SHEET

CITY OF HOUSTON
HOUSTON PUBLIC WORKS

DRAWING SCALE HORIZ: XXX VERT: XXX

CATEGORY NO. 0-C-1 SHEET NO. 9 OF 220

FOR CITY OF HOUSTON USE ONLY

CITY OF HOUSTON XXXX
CITY SURVEY XXXX
SITE CONTROL MONUMENT

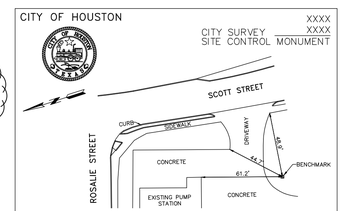

Project WBS# R-000267-0127-3
Texas Coordinate System of 1983, South Central Zone, U. S. Survey Feet
X= 3,126,667.11
Y= 13,830,710.75
Lat.= 29°43'44.6873"N
Long.= 095°21'00.7540"W
Reference Frame Used: EPOCH 2010
Vertical Adjustment Used: NAVD '88 (CORS '96)
General Location: LOCATED INSIDE SCOTT No.1 LIFT STATION SITE
Date Set: N/A Type of Mark: 4B
Remarks: Established on March 12, 2025.

Keymap Page: 493Z
Orthometric Elevation = 40.21'
Ellipsoid Height =
Geoid: GEOID '18
Datum Source & Adjustment: NAD '83 (2011)

NOTE:
1. Bearings are grid bearings.
2. Combined Scale Factor = (0.99988918).
3. Surface = Grid / S.F.

Western Group Consultants
11111 Katy Freeway
Suite 525
Houston, TX 77079
(713) 465-6655

\\SHAZIA-PC\Master Files\Quiddity-Jones & Carter\Scott No. 1 Lift Station\Topographic Drawings\3100 Scott St.dwg

0 1 2 3 4 5

ORIGINAL SCALE IN INCHES FOR REDUCED PLANS

FLOODPLAIN INFORMATION:

THIS TRACT LIES WITHIN UNSHADED ZONE "X" OF THE FLOOD INSURANCE RATE MAP, COMMUNITY OF CITY OF HOUSTON, MAP No. 48201C0880M, PANEL 0880 OF 1150, SUFFIX "M" DATED JANUARY 6, 2017, FOR HARRIS COUNTY TEXAS AND INCORPORATED AREAS. UNSHADED ZONE "X" IS DEFINED AS AREAS DETERMINED TO BE OUTSIDE THE 0.2% ANNUAL CHANCE FLOODPLAIN.

0.2% ANNUAL CHANCE FLOOD ELEVATION = 39.7'

1% ANNUAL CHANCE FLOOD ELEVATION = 37.3'

NO.	DATE	REVISIONS	APP.

0 5 10 20 40 60

SCALE: 1" = 20'

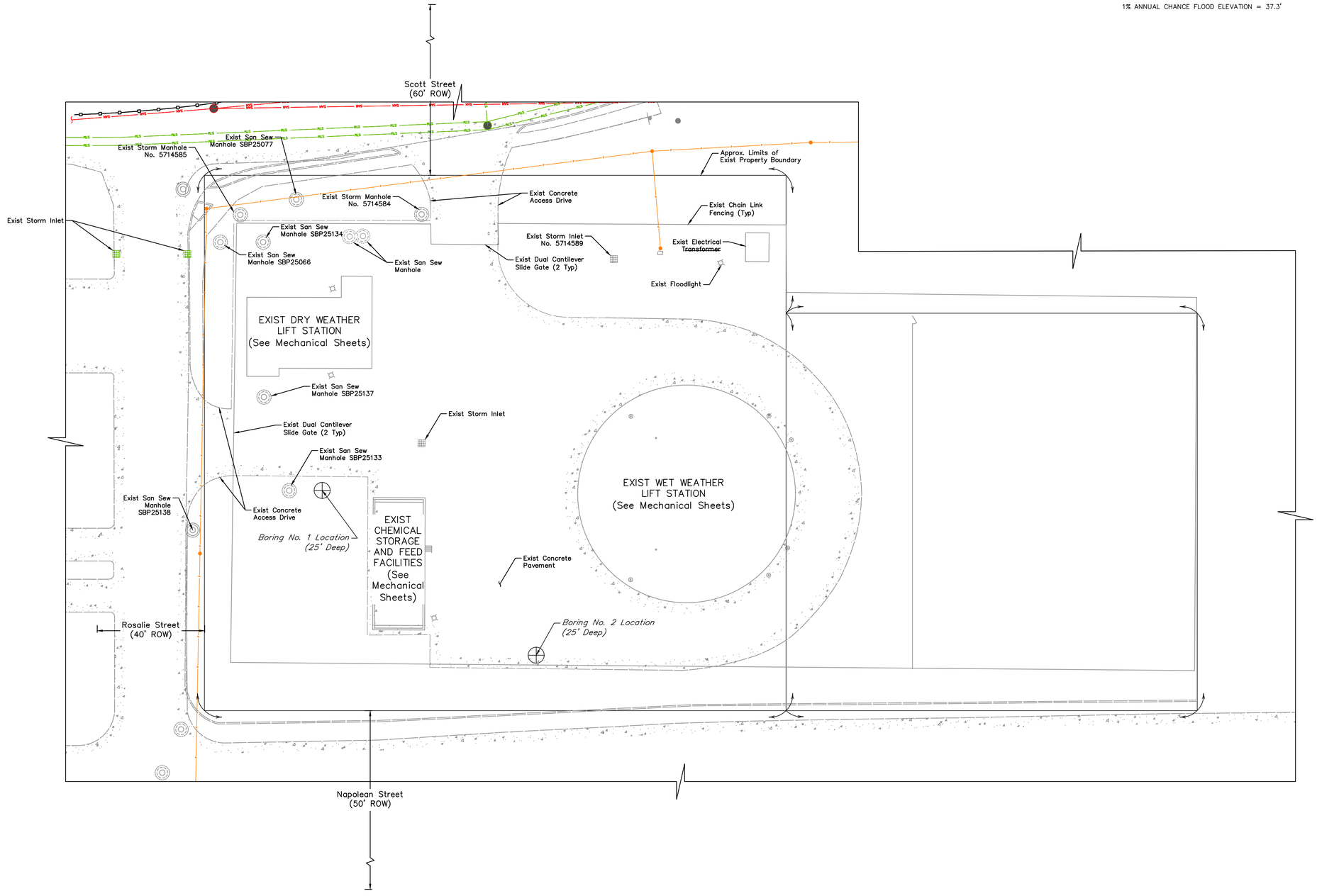

QUIDDITY

Texas Board of Professional Engineers and Land Surveyors Reg. No. F-23290
6330 West Loop South, Suite 150 • Bellaire, TX 77401 • 713.777.5337

JOB NO: 00050-0099-01 DATE: 1/19/2026

APPROVED BY:

DATE: MAY 2026

DESIGNED BY: MBMITCHELL

DRAWN BY: JMMUSSO

SURVEYED BY:

FB NO. XXXXXX

INTERIM REVIEW

Not intended for construction, bidding or permit purposes.

Engineer: HARRY W. ISENSEE III, P.E.

P.E. Serial No.: 144401

Date: MAY 2026

CITY OF HOUSTON
HOUSTON PUBLIC WORKS

SCOTT STREET NO. 1 LIFT STATION REHABILITATION

CIVIL

EXISTING SITE PLAN

WBS NUMBER	FOR CITY OF HOUSTON USE ONLY
R-000267-127A-4	
DRAWING SCALE	
AS NOTED	
CITY OF HOUSTON PM	
TAHA LOTIA	
DWG NO. 0-C-2	
SHEET NO. 10 OF 220	

K:\00050\00050-0099-01 Scott St. No. 1 Lift Station Rehabilitation - Phase II Design\2 Design Phase\CAD\CIVIL-EX.dwg

0 1 2 3 4 5

ORIGINAL SCALE IN INCHES FOR REDUCED PLANS

BENCHMARK:

(See Survey Sheet)

TEMPORARY BENCHMARK:

(See Survey Sheet)

NOTES:

1. Locations of underground facilities are per record drawings. Contractor shall field verify location, size, and depth as necessary to complete the work. Contractor shall notify Engineer of any conflicts between existing and proposed facilities. Adjustments to location and depth of proposed facilities shall be as directed by Engineer and shall be at no additional cost to owner.
2. Existing underground Centerpoint facilities are per map request data. Contractor shall field verify the line sizes, use, and location prior to removal. Contractor shall coordinate with Centerpoint prior to alteration of Centerpoint underground facilities.

NO.	DATE	REVISIONS	APP.

0 5 10 20 40 60

SCALE: 1" = 20'

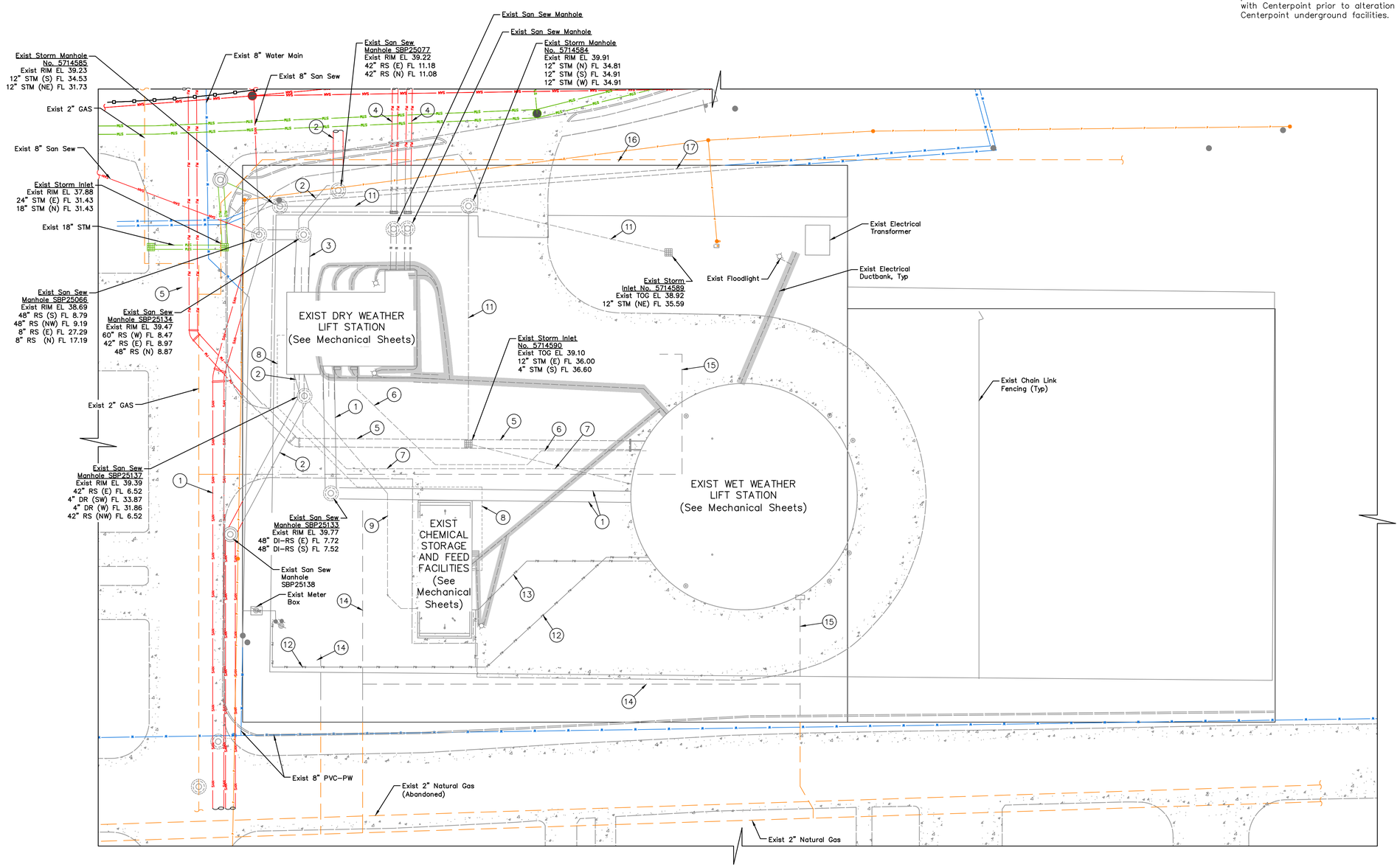

KEYED NOTES BY SYMBOL "(#)":

KEY	DESCRIPTION
(1)	Exist 48" RS
(2)	Exist 42" RS
(3)	Exist 60" RS
(4)	Exist 24" DI-RS (Force Main)
(5)	Exist 36" DI-RS (Force Main)
(6)	Exist 6" DI-DR (Force Main)
(7)	Exist 4" RS
(8)	Exist 1/2" PE-FES in 3" PVC-CCP
(9)	Exist 4" DR
(10)	Exist 4" PVC-STM
(11)	Exist 12" STM
(12)	Exist 1-1/2" PVC-PW
(13)	Exist 1-1/4" PVC-PW
(14)	Exist 1-1/2" NAT GAS
(15)	Exist 3" NAT GAS
(16)	Exist 2" NAT GAS
(17)	20" DI-PW

QUIDDITY

Texas Board of Professional Engineers and Land Surveyors Reg. No. F-23290
6330 West Loop South, Suite 150 • Bellaire, TX 77401 • 713.777.5337

JOB NO: 00050-0099-01 DATE: 1/19/2026

APPROVED BY:

DATE: MAY 2026

DESIGNED BY: MBMITCHELL

DRAWN BY: JMMUSSO

SURVEYED BY:

FB NO. XXXXXX

INTERIM REVIEW

Not intended for construction, bidding or permit purposes.

Engineer: HARRY W. ISENSEE III, P.E.

P.E. Serial No.: 144401

Date: MAY 2026

CITY OF HOUSTON

HOUSTON PUBLIC WORKS

SCOTT STREET NO. 1 LIFT STATION REHABILITATION

CIVIL

EXISTING YARD PIPING PLAN

WBS NUMBER	FOR CITY OF HOUSTON USE ONLY
R-000267-127A-4	
DRAWING SCALE	
AS NOTED	
CITY OF HOUSTON PM	
TAHA LOTIA	
DWG NO. 0-C-3	
SHEET NO. 11 OF 220	

K:\00050\00050-0099-01 Scott St. No. 1 Lift Station Rehabilitation - Phase II Design\2 Design Phase\CAD\CIVIL-EX.dwg

0 1 2 3 4 5

ORIGINAL SCALE IN INCHES FOR REDUCED PLANS

FLOODPLAIN INFORMATION:
THIS TRACT LIES WITHIN UNSHADED ZONE "X" OF THE FLOOD INSURANCE RATE MAP, COMMUNITY OF CITY OF HOUSTON, MAP No. 48201C0880M, PANEL 0880 OF 1150, SUFFIX "M" DATED JANUARY 6, 2017, FOR HARRIS COUNTY TEXAS AND INCORPORATED AREAS. UNSHADED ZONE "X" IS DEFINED AS AREAS DETERMINED TO BE OUTSIDE THE 0.2% ANNUAL CHANCE FLOODPLAIN.

0.2% ANNUAL CHANCE FLOOD ELEVATION = 39.7'

1% ANNUAL CHANCE FLOOD ELEVATION = 37.3'

NO.	DATE	REVISIONS	APP.

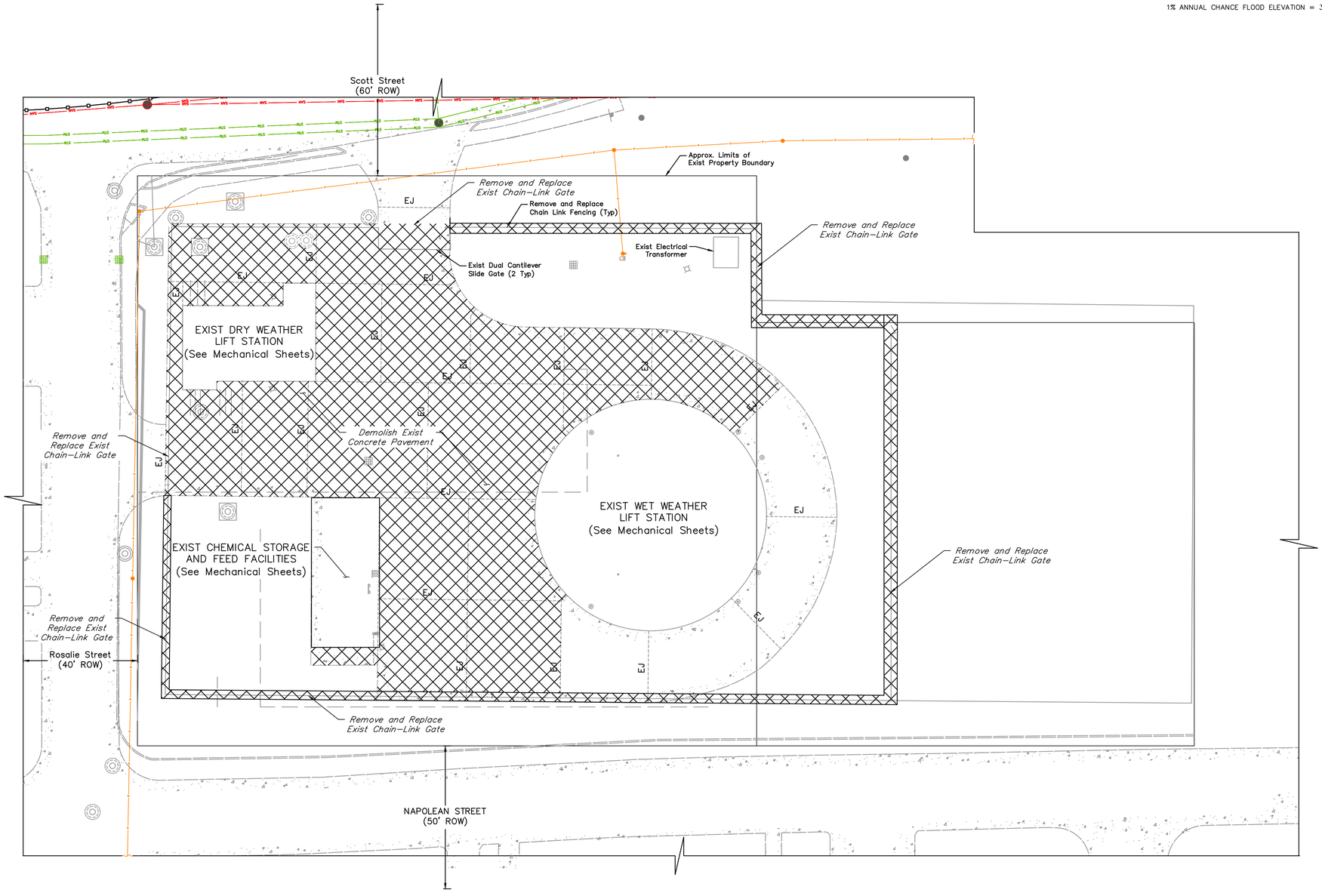

0 5 10 20 40 60

SCALE: 1" = 20'

LEGEND:

EJ ---------- Expansion Joint

Demolish

NOTES:

1. Contractor shall walk the site with a City representative prior to demolition to determine any items to be salvaged and returned by the City. Contractor shall not begin demolition on site without giving the City first right of refusal. Contractor shall deliver salvaged items to a location as determined by City of Houston Wastewater Ops.

2. The sound was produced by the erection, excavation, construction, or demolition of any building or structure, including the use of any necessary tools or equipment, conducted between the hours of 7 a.m. and 8 p.m., which activity did not produce a sound exceeding 85 dB (A) when measured from the property line of the residential property where the sound being received.

QUIDDITY
Texas Board of Professional Engineers and Land Surveyors Reg. No. F-23290
6330 West Loop South, Suite 150 • Bellaire, TX 77401 • 713.777.5337

JOB NO: 00050-0099-01 DATE: 1/19/2026

APPROVED BY:

DATE: MAY 2026

DESIGNED BY: MBMITCHELL

DRAWN BY: JMMUSSO

SURVEYED BY:

FB NO. XXXXXX

INTERIM REVIEW
Not intended for construction, bidding or permit purposes.
Engineer: HARRY W. ISENSEE III, P.E.
P.E. Serial No.: 144401
Date: MAY 2026

CITY OF HOUSTON
HOUSTON PUBLIC WORKS

SCOTT STREET NO. 1 LIFT STATION REHABILITATION

CIVIL

SITE DEMOLITION PLAN

WBS NUMBER
R-000267-127A-4
DRAWING SCALE
AS NOTED
CITY OF HOUSTON PM
TAHA LOTIA
DWG NO. 0-C-4
SHEET NO. 12 OF 220

FOR CITY OF HOUSTON USE ONLY

0 1 2 3 4 5

ORIGINAL SCALE IN INCHES FOR REDUCED PLANS

BENCHMARK:

(See Survey Sheet)

TEMPORARY BENCHMARK:

(See Survey Sheet)

ITEMS OF WORK

No.	DESCRIPTION
1	Demolish Exist 24" DI–RS (Force Main) and San Sew MH from Dry Weather Pump Station up to 4' from east property boundary
2	Demolish Exist 36" DI–RS (Force Main)
3	Demolish Exist 6" DI–DR (Force Main) from Wet Weather Pump Station structure to Dry Weather Pump Station
4	Demolish Exist 4" San Sew from Wet Weather Pump Station structure to receiving San Sew Manhole
5	Demolish Exist 1/2" PE–FES in 3" PVC–CCP from Exist Chemical and Feed Storage Facility structure to Exist Dry Weather Pump Station structure
6	Demoish Exist 4" DR from Exist Chemical and Feed Storage Facility structure to receiving San Sew Manhole
7	Demolish Exist 4" PVC–STM from Exist Wet Weather Pump Station structure to receiving Storm Sewer Inlet
8	Demolish Exist Storm Sewer Inlet and Exist 12" Storm Sewer.
9	Demolish Exist 1–1/2" PVC–PW from north property boundary to exist Wet Weather Pump Station structure
10	Demolish Exist 1–1/4" PVC–PW from Wet Weather Pump Station structure to Exist Chemical and Feed Storage Facility
11	Coordinate with Natural Gas Utility to plug and cap and demolish onsite natural gas inside the site boundary.

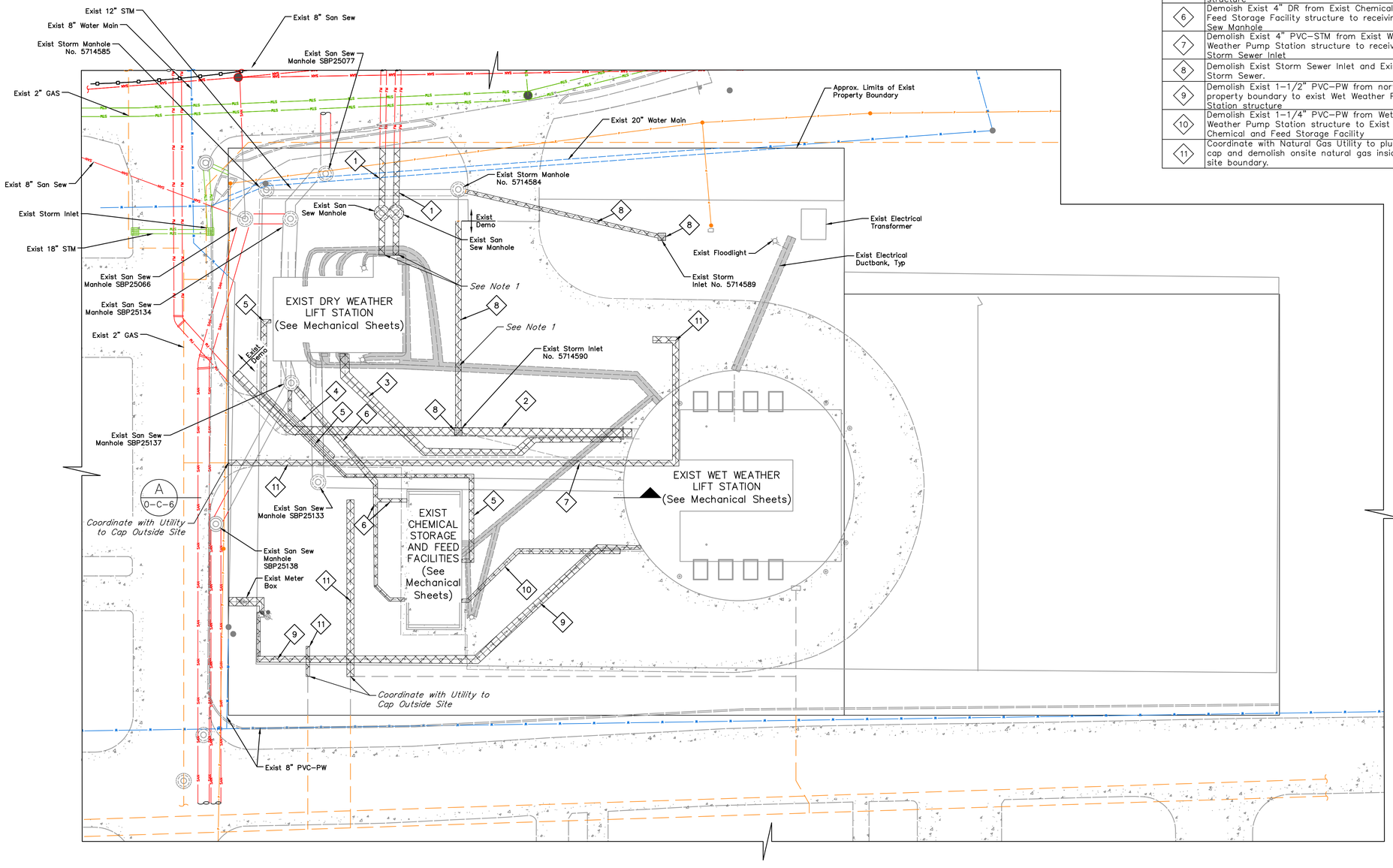

NO.	DATE	REVISIONS	APP.

0 5 10 20 40 60

SCALE: 1" = 20'

NOTES:

1. Locations of underground facilities are per record drawings. Contractor shall field verify line sizes, use, and location of underground facilities prior to removal. Engineer to approve of all deviations.
2. Existing underground Centerpoint facilities are per map request data. Contractor shall field verify the line sizes, use, and location prior to removal. Contractor shall coordinate with Centerpoint prior to removal of Centerpoint underground facilities.
3. Contractor shall walk the site with a City reprsentative prior to demolition to determine any items to be salvaged and returned by the City. Contractor shall not begin demolition on site without giving the City first right of refusal. Contractor shall deliver salvaged items to a location as determined by City of Houston Wastewater Ops.
4. The sound was produced by the erection, excavation, construction, or demolition of any building or structure, including the use of any necessary tools or equipment, conducted between the hours of 7 a.m. and 8 p.m., which activity did not produce a sound exceeding 85 dB (A) when measured from the property line of the residential property where the sound being received.

QUIDDITY

Texas Board of Professional Engineers and Land Surveyors Reg. No. F-23290
6330 West Loop South, Suite 150 • Bellaire, TX 77401 • 713.777.5337

JOB NO: 00050–0099–01 DATE: 1/19/2026

APPROVED BY:

DATE: MAY 2026

DESIGNED BY: MBMITCHELL

DRAWN BY: JMMUSSO

SURVEYED BY:

FB NO. XXXXXX

INTERIM REVIEW

Not intended for construction, bidding or permit purposes.

Engineer: HARRY W. ISENSEE III, P.E.

P.E. Serial No.: 144401

Date: MAY 2026

CITY OF HOUSTON

HOUSTON PUBLIC WORKS

SCOTT STREET NO. 1 LIFT STATION REHABILITATION

CIVIL

YARD PIPING DEMOLITION PLAN

WBS NUMBER	FOR CITY OF HOUSTON USE ONLY
R–000267–127A–4	
DRAWING SCALE	
AS NOTED	
CITY OF HOUSTON PM	
TAHA LOTIA	
DWG NO. 0–C–5	
SHEET NO. 13 OF 220	

K:\00050\00050-0099-01 Scott St. No. 1 Lift Station Rehabilitation - Phase II Design\2 Design Phase\CAD\CIVIL-EX.dwg

ORIGINAL SCALE IN INCHES FOR REDUCED PLANS

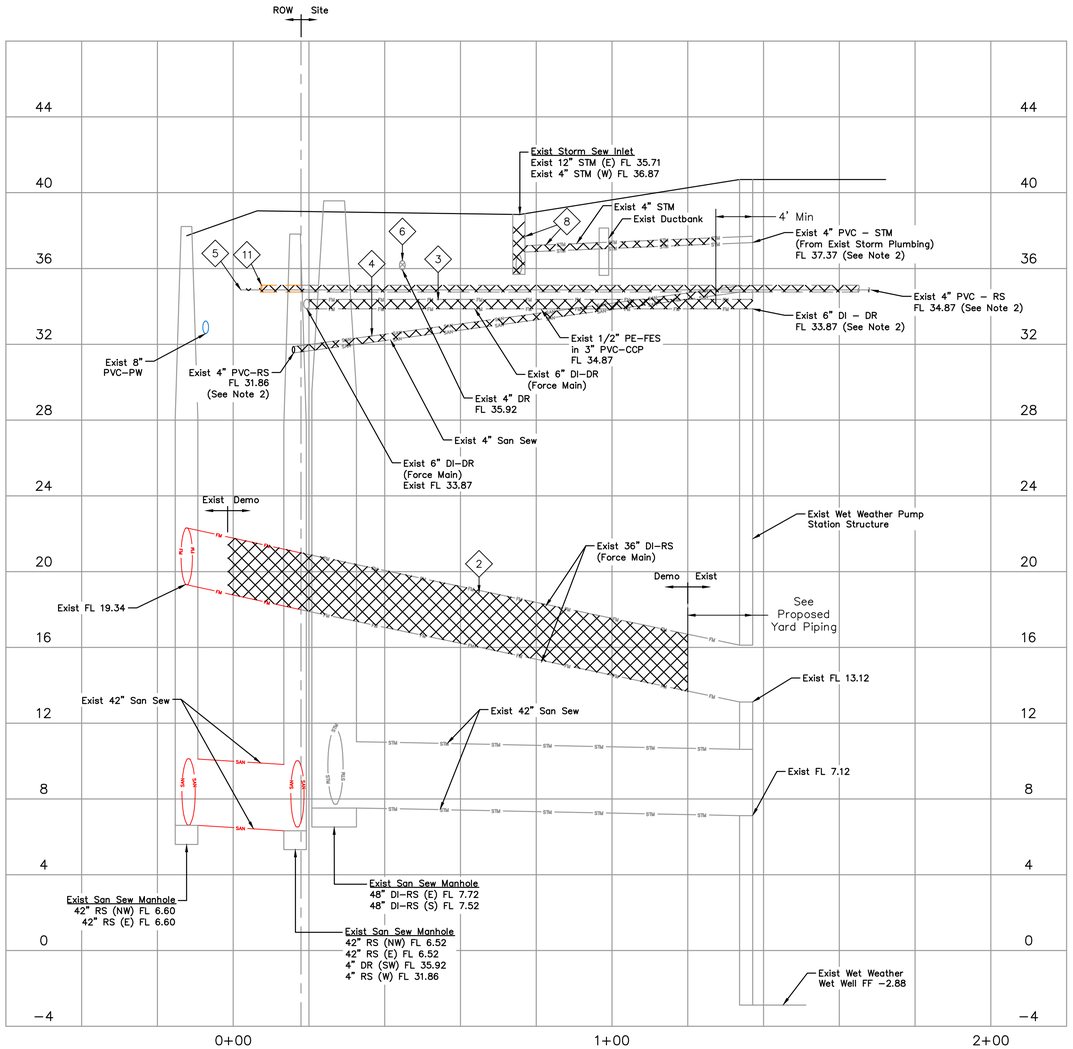

A
0-C-5

SECTION

SCALE: Horizontal 1" = 20'
SCALE: Vertical 1" = 4'

ITEMS OF WORK

No.	DESCRIPTION
1	Demolish Exist 24" DI–RS (Force Main) and San Sew MH from Dry Weather Pump Station up to 4' from east property boundary
2	Demolish Exist 36" DI–RS (Force Main)
3	Demolish Exist 6" DI–DR (Force Main) from Wet Weather Pump Station structure to Dry Weather Pump Station
4	Demolish Exist 4" San Sew from Wet Weather Pump Station structure to receiving San Sew Manhole
5	Demolish Exist 1/2" PE–FES in 3" PVC–CCP from Exist Chemical and Feed Storage Facility structure to Exist Dry Weather Pump Station structure
6	Demoish Exist 4" DR from Exist Chemical and Feed Storage Facility structure to receiving San Sew Manhole
7	Demolish Exist 4" PVC–STM from Exist Wet Weather Pump Station structure to receiving Storm Sewer Inlet
8	Demolish Exist Storm Sewer Inlet, Exist 12" Storm Sewer, and Exist Storm Sewer Manhole
9	Demolish Exist 1–1/2" PVC–PW from north property boundary to exist Wet Weather Pump Station structure
10	Demolish Exist 1–1/4" PVC–PW from Wet Weather Pump Station structure to Exist Chemical and Feed Storage Facility
11	Coordinate with Natural Gas Utility to plug and cap and demolish onsite natural gas inside the site boundary.

NO.	DATE	REVISIONS	APP.

NOTES:

1. Locations of underground facilities are per record drawings. Contractor shall field verify line sizes, use, and location of underground facilities prior to removal. Engineers to approve of all deviations.
2. Existing underground Centerpoint facilities are per map request data. Contractor shall field verify the line sizes, use, and location prior to removal. Contractor shall coordinate with Centerpoint prior to removal of Centerpoint underground facilities.
3. Contractor shall walk the site with a City representative prior to demolition to determineany items to be salvaged and returned by the City. Contractor shall not begin demolition on site without giving the City first right of refusal. Contractorshall deliver salvaged items to a location as determined by City of Houston Wastewater Ops.
4. The sound was produced by the erection, excavation, construction, or demolition of any building or structure, including the use of any necessary tools or equipment, conducted between the hours of 7 a.m and 8 p.m., which activity did not produce a sound exceeding 85 dB(A) when measured from the property line of the residential property where the sound is being received.

QUIDDITY
Texas Board of Professional Engineers and Land Surveyors Reg. No. F-23290
6330 West Loop South, Suite 150 • Bellaire, TX 77401 • 713.777.5337

JOB NO: 00050-0099-01 DATE: 1/19/2026

APPROVED BY:

DATE: MAY 2026

DESIGNED BY: MBMITCHELL

DRAWN BY: JMMUSSO

SURVEYED BY:

FB NO. XXXXXX

INTERIM REVIEW
Not intended for construction, bidding or permit purposes.
Engineer: HARRY W. ISENSEE III, P.E.
P.E. Serial No.: 144401
Date: MAY 2026

CITY OF HOUSTON
HOUSTON PUBLIC WORKS

SCOTT STREET NO. 1 LIFT STATION REHABILITATION

CIVIL

YARD PIPING DEMOLITION SECTION

WBS NUMBER	FOR CITY OF HOUSTON USE ONLY
R-000267-127A-4	
DRAWING SCALE	
AS NOTED	
CITY OF HOUSTON PM	
TAHA LOTIA	
DWG NO. 0-C-6	
SHEET NO. 14 OF 220	

K:\00050\00050-0099-01 Scott St. No. 1 Lift Station Rehabilitation - Phase II Design\2 Design Phase\CAD\CIVIL-EX.dwg

0 1 2 3 4 5

ORIGINAL SCALE IN INCHES FOR REDUCED PLANS

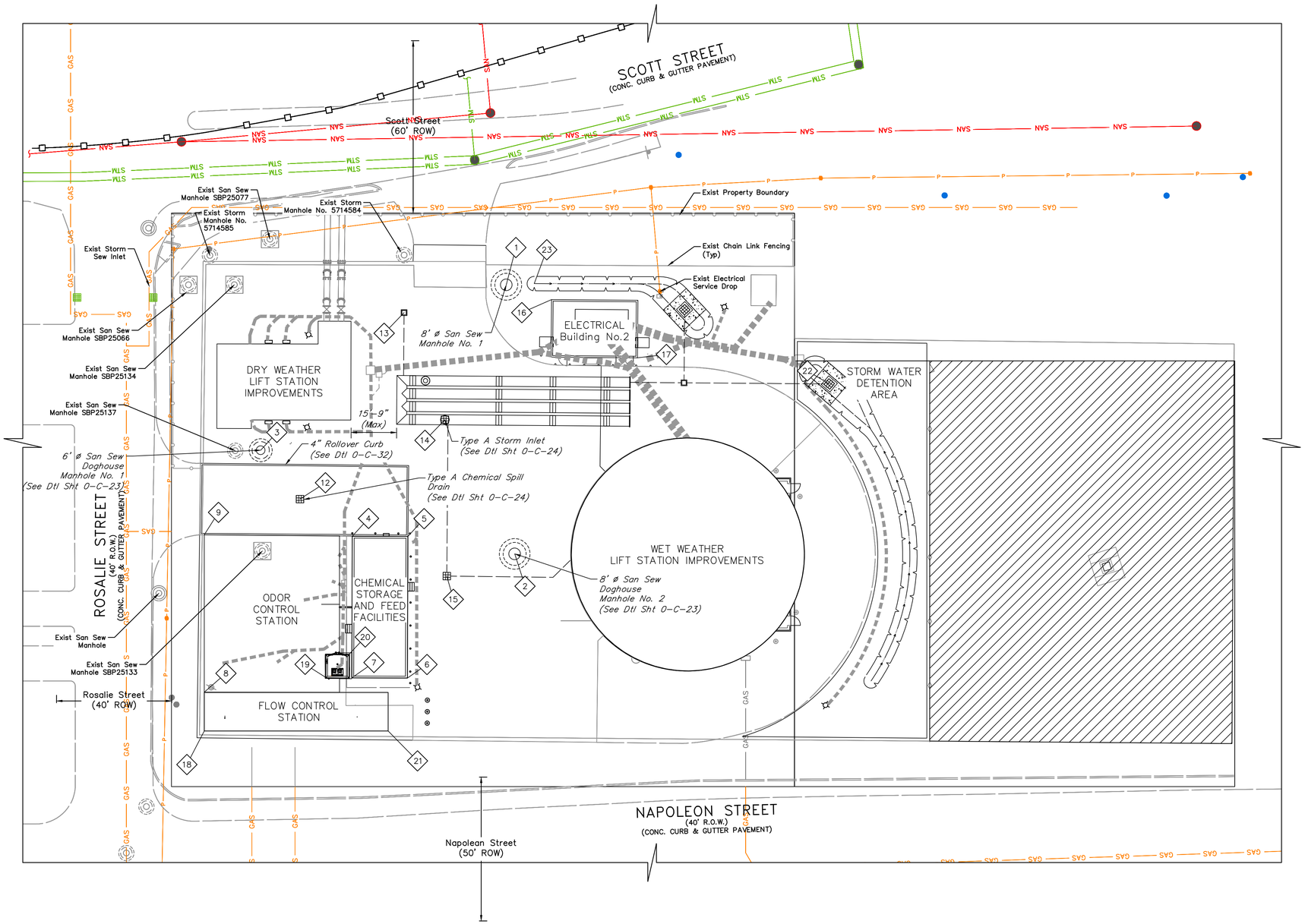

COORDINATES LOCATIONS TABLE

No.	NORTHING	EASTING
1	13830710.81	3126680.57
2	13830738.62	3126591.24
3	13830812.24	3126651.84
4	13830790.71	3126613.84
5	13830772.27	3126608.04
6	13830787.05	3126561.07
7	13830805.49	3126566.87
8	13830855.92	3126577.32
9	13830839.69	3126629.56
10	13830806.57	3126593.99
11	13830834.98	3126587.97
12	13830804.28	3126631.42
13	13830744.53	3126701.84
14	13830727.17	3126696.52
15	13830685.19	3126683.48
16	13830744.88	3126641.07
17	13830692.98	3126659.41
18	13830859.92	3126564.43
19	13830813.96	3126569.54
20	13830804.04	3126574.98
21	13830798.87	3126545.48
22	13830616.69	3126615.23
23	13830704.27	3126678.94

NO.	DATE	REVISIONS	APP.

0 5 10 20 40 60

SCALE: 1" = 20'

LEGEND:

CONSTRUCTION LAYDOWN AND STORAGE AREA

NOTES:

1. Site items of work can be found on sheets 0-C-4 through 0-C-6, 0-C-8 through 0-C-21, and as noted throughout planset.

QUIDDITY

Texas Board of Professional Engineers and Land Surveyors Reg. No. F-23290
6330 West Loop South, Suite 150 • Bellaire, TX 77401 • 713.777.5337

JOB NO: 00050-0099-01 DATE: 1/19/2026

APPROVED BY:

DATE: MAY 2026

DESIGNED BY: MBMITCHELL

DRAWN BY: JMMUSSO

SURVEYED BY:

FB NO. XXXXXX

INTERIM REVIEW
Not intended for construction, bidding or permit purposes.
Engineer: HARRY W. ISENSEE III, P.E.
P.E. Serial No.: 144401
Date: MAY 2026

CITY OF HOUSTON
HOUSTON PUBLIC WORKS

SCOTT STREET NO. 1 LIFT STATION REHABILITATION

CIVIL

PROPOSED SITE PLAN

WBS NUMBER
R-000267-127A-4

DRAWING SCALE
AS NOTED

CITY OF HOUSTON PM
TAHA LOTIA

DWG NO. 0-C-7

SHEET NO. 15 OF 220

FOR CITY OF HOUSTON USE ONLY

K:\00050\00050-0099-01 Scott St. No. 1 Lift Station Rehabilitation - Phase II Design\2 Design Phase\CAD\CIVIL-PR.dwg

ORIGINAL SCALE IN INCHES FOR REDUCED PLANS

NO.	DATE	REVISIONS	APP.

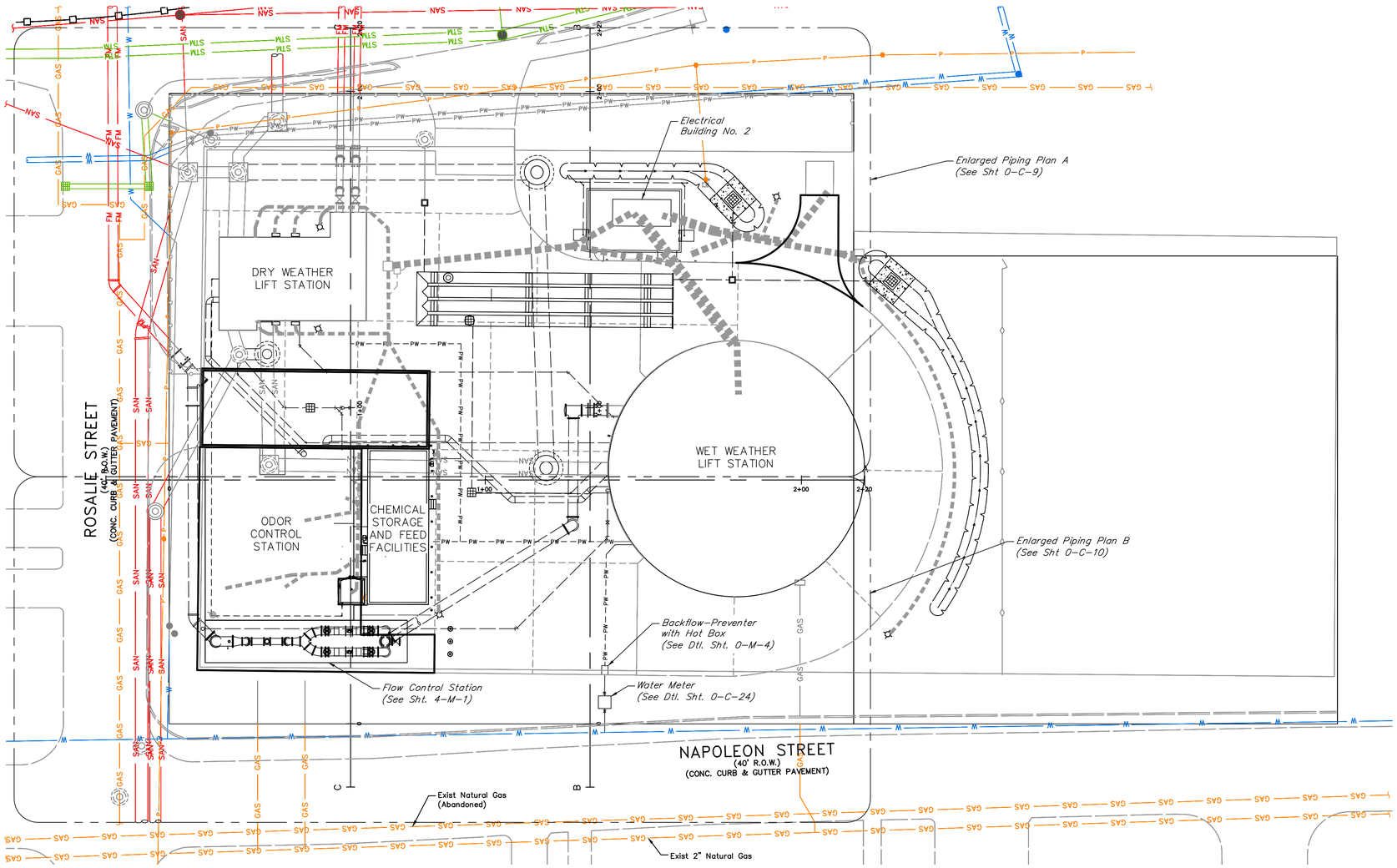

0 5 10 20 40 60

SCALE: 1" = 20'

QUIDDITY

Texas Board of Professional Engineers and Land Surveyors Reg. No. F-23290
6330 West Loop South, Suite 150 • Bellaire, TX 77401 • 713.777.5337

JOB NO: 00050-0099-01 DATE: 1/19/2026

APPROVED BY:

DATE: MAY 2026

DESIGNED BY: MBMITCHELL

DRAWN BY: JMMUSSO

SURVEYED BY:

FB NO. XXXXXX

INTERIM REVIEW

Not intended for construction, bidding or permit purposes.

Engineer: HARRY W. ISENSEE III, P.E.

P.E. Serial No.: 144401

Date: MAY 2026

CITY OF HOUSTON
HOUSTON PUBLIC WORKS

SCOTT STREET NO. 1 LIFT STATION REHABILITATION

CIVIL

PROPOSED YARD PIPING PLAN

WBS NUMBER
R-000267-127A-4
DRAWING SCALE
AS NOTED
CITY OF HOUSTON PM
TAHA LOTIA
DWG NO. 0-C-8
SHEET NO. 16 OF 220

FOR CITY OF HOUSTON USE ONLY

K:\00050\00050-0099-01 Scott St. No. 1 Lift Station Rehabilitation - Phase II Design\2 Design Phase\CAD\CIVIL-PIR.dwg

ORIGINAL SCALE IN INCHES FOR REDUCED PLANS

0 1 2 3 4 5

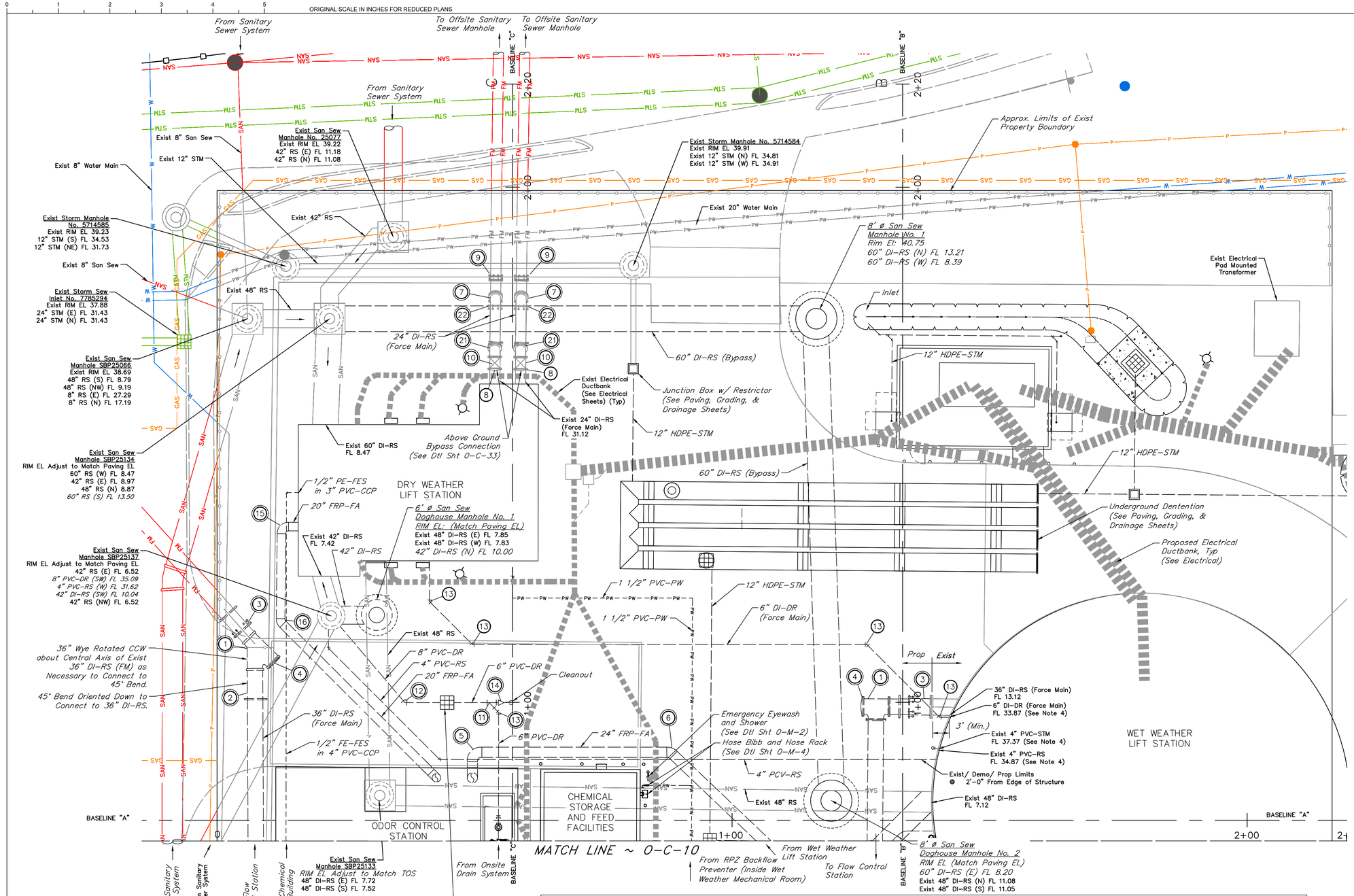

NO.	DATE	REVISIONS	APP.

0 5 10 20 30

SCALE: 1" = 10'

NOTES:

1. Locations of underground facilities are per record drawings. Contractor shall field verify line sizes, use, and location of underground facilities prior to removal. Engineer to approve of all deviations.
2. Existing underground Centerpoint facilities are per map request data. Contractor shall field verify the line sizes, use, and location prior to removal. Contractor shall coordinate with Centerpoint prior to removal of Centerpoint underground facilities.
3. Waterline joints shall be a minimum of 9'–0" from centerline of sanitary crossings.
4. The designated existing pipe shall extend a minimum of 2'–0" from the edge of the structure. Contractor shall provide and install restrained couplings to transition and connect to proposed piping.
5. Contractor shall stencil directional arrows and process line identification on all pipes at no greater than 10–foot interval.
6. Apply protective coating to all exposed pipes, valves, fittings, and flanges.

VALVES, FITTINGS, AND ACCESSORIES SCHEDULE

No.	DESCRIPTION	No.	DESCRIPTION	No.	DESCRIPTION	No.	DESCRIPTION
(1)	36"x36"x36" Tee Bend, MJ	(6)	24" 45° Bend, PE	(12)	8" 45° Bend, PO	(18)	4" 45° Bend, PO
(2)	36" 45° Bend, MJ	(7)	24" Wye, FJ	(13)	6" 45° Bend, PO	(19)	6" 45° Bend, MJ
(3)	36" Sleeve Coupling	(8)	24" Blind Flange, FJ	(14)	8" x 6" Concentric Reducer, PO	(20)	6" Wye, MJ
(4)	36" Plug	(9)	24" Flange Coupling Adapter	(15)	20" 90° Bend, PE	(21)	24" 45° Bend, FJ
(5)	24" 90° Bend, PE	(10)	24" Plug Valve, FJ	(16)	20" 45° Bend, PE	(22)	24" Restrained Sleeve Coupling
◯	Denotes the use of a restrained, push–on connection	(11)	8" x 8" x 6" Lateral Wye, PO	(17)	6" x 6" x 4" Lateral Wye, PO		

QUIDDITY
Texas Board of Professional Engineers and Land Surveyors Reg. No. F-23290
6330 West Loop South, Suite 150 • Bellaire, TX 77401 • 713.777.5337

JOB NO: 00050–0099–01 DATE: 1/19/2026

APPROVED BY:

DATE: MAY 2026

DESIGNED BY: MBMITCHELL

DRAWN BY: JMMUSSO

SURVEYED BY:

FB NO. XXXXXX

INTERIM REVIEW
Not intended for construction, bidding or permit purposes.
Engineer: HARRY W. ISENSEE III, P.E.
P.E. Serial No.: 144401
Date: MAY 2026

CITY OF HOUSTON
HOUSTON PUBLIC WORKS

SCOTT STREET NO. 1 LIFT STATION REHABILITATION

CIVIL

PROPOSED YARD PIPING ENLARGED PLAN A

WBS NUMBER	FOR CITY OF HOUSTON USE ONLY
R–000267–127A–4	
DRAWING SCALE	
AS NOTED	
CITY OF HOUSTON PM	
TAHA LOTIA	
DWG NO. 0–C–9	
SHEET NO. 17 OF 220	

K:\00050\00050-0099-01 Scott St. No. 1 Lift Station Rehabilitation - Phase II Design\2 Design Phase\CAD\CIVIL-PR.dwg

0 1 2 3 4 5

ORIGINAL SCALE IN INCHES FOR REDUCED PLANS

NO.	DATE	REVISIONS	APP.

VALVES, FITTINGS, AND ACCESSORIES SCHEDULE

No.	DESCRIPTION
1	36" 45° Bend, MJ
2	4" x 4" x 4" Lateral Wye, PO
3	4" 45° Bend, PO
4	6" x 4" Concentric Reducer, PO
5	24" 45° Bend, PE
6	6" x 6" x 6" Lateral Wye, PO
7	6" 45° Bend, PO
8	8" 45° Bend, MJ
9	8" 90° Bend, MJ
10	8" Eccentric Plug Valve w/ Stem Extensions & Operating Nut, MJ
11	36" 90° Bend, MJ
◯	Denotes the use of a restrained, push-on connection

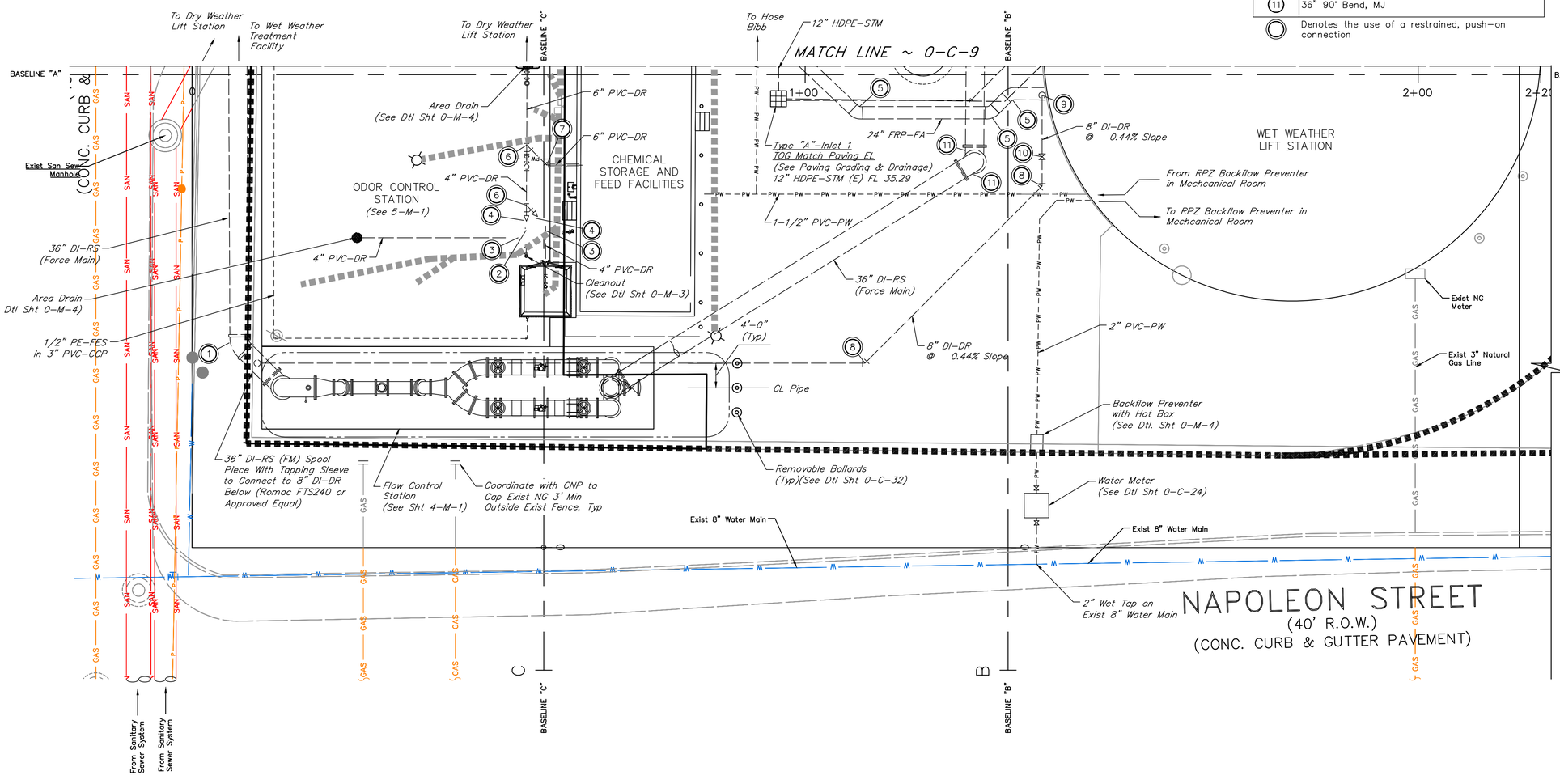

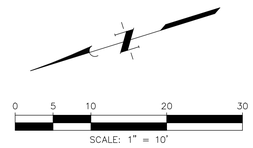

NOTES:

1. All Pipe and Fittings shall be hot-dip galvanized steel, unless otherwise directed by the Engineer.
2. A Tapping Saddle may be used as approved by the Engineer.
3. All components shall be hot-dip galvanized. Apply galvanizing paint to all welds, threads and areas scraped or damaged during construction.
4. Contractor shall stencil directional arrows and process line identification on all pipes at no greater than 10-Foot interval.
5. Apply protective coating to all exposed pipes, valves, fittings, and flanges.

QUIDDITY
Texas Board of Professional Engineers and Land Surveyors Reg. No. F-23290
6330 West Loop South, Suite 150 • Bellaire, TX 77401 • 713.777.5337

JOB NO: 00050-0099-01 DATE: 1/19/2026

APPROVED BY:

DATE: MAY 2026

DESIGNED BY: MBMITCHELL

DRAWN BY: JMMUSSO

SURVEYED BY:

FB NO. XXXXX

INTERIM REVIEW
Not intended for construction, bidding or permit purposes.
Engineer: HARRY W. ISENSEE III, P.E.
P.E. Serial No.: 144401
Date: MAY 2026

CITY OF HOUSTON
HOUSTON PUBLIC WORKS

SCOTT STREET NO. 1 LIFT STATION REHABILITATION

CIVIL

PROPOSED YARD PIPING ENLARGED PLAN B

WBS NUMBER	FOR CITY OF HOUSTON USE ONLY
R-000267-127A-4	
DRAWING SCALE	
AS NOTED	
CITY OF HOUSTON PM	
TAHA LOTIA	
DWG NO. 0-C-10	
SHEET NO. 18 OF 220	

K:\00050\00050-0099-01 Scott St. No. 1 Lift Station Rehabilitation - Phase II Design\2 Design Phase\CAD\CIVIL-PR.dwg

ORIGINAL SCALE IN INCHES FOR REDUCED PLANS

NO.	DATE	REVISIONS	APP.

NOTES:

1. Locations of underground facilities are per record drawings. Contractor shall field verify line sizes, use, and location of underground facilities prior to removal. Engineer to approve of all deviations.
2. The designated existing pipe shall extend a minimum of 2'–0" from the edge of the structure. Contractor shall provide and install restrained couplings to transition and connect to proposed piping.
3. Contractor shall coordinate flowlines of pipe and fittings based on the existing FL of 36" DI–RS (FM) at the tie–in location and required orientation of pipe and fittings to make connection. Contractor shall field verify the existing 36" DI–RS pipe elevation and location at the proposed tie–in location and report findings to Engineer prior to submitting shop drawings.

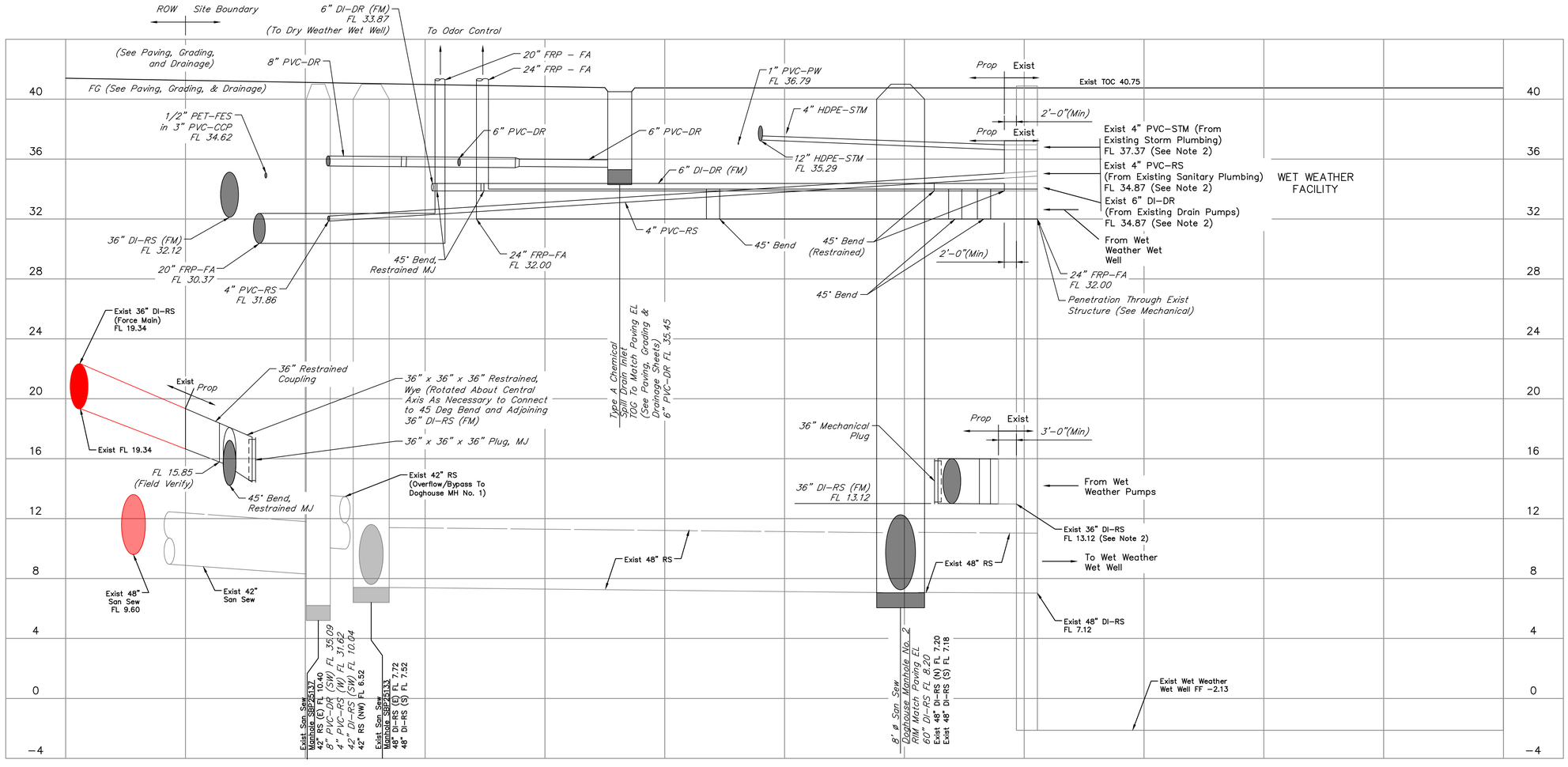

BASELINE A

SCALE: Horizontal 1" = 10'
SCALE: Vertical 1" = 4'

QUIDDITY
Texas Board of Professional Engineers and Land Surveyors Reg. No. F-23290
6330 West Loop South, Suite 150 • Bellaire, TX 77401 • 713.777.5337

JOB NO: 00050–0099–01 DATE: 1/19/2026

APPROVED BY:
DATE: MAY 2026
DESIGNED BY: MBMITCHELL
DRAWN BY: SSOMMERS
SURVEYED BY:
FB NO. XXXXXX

INTERIM REVIEW
Not intended for construction, bidding or permit purposes.
Engineer: HARRY W. ISENSEE III, P.E.
P.E. Serial No.: 144401
Date: MAY 2026

CITY OF HOUSTON
HOUSTON PUBLIC WORKS

SCOTT STREET NO. 1 LIFT STATION REHABILITATION

CIVIL

PROPOSED YARD PIPING BASELINE A

WBS NUMBER	FOR CITY OF HOUSTON USE ONLY
R–000267–127A–4	
DRAWING SCALE	
AS NOTED	
CITY OF HOUSTON PM	
TAHA LOTIA	
DWG NO. 0–C–11	
SHEET NO. 19 OF 220	

K:\00050\00050-0099-01 Scott St. No. 1 Lift Station Rehabilitation - Phase II Design\2 Design Phase\CAD\CIVIL-PR.dwg

ORIGINAL SCALE IN INCHES FOR REDUCED PLANS

NO.	DATE	REVISIONS	APP.

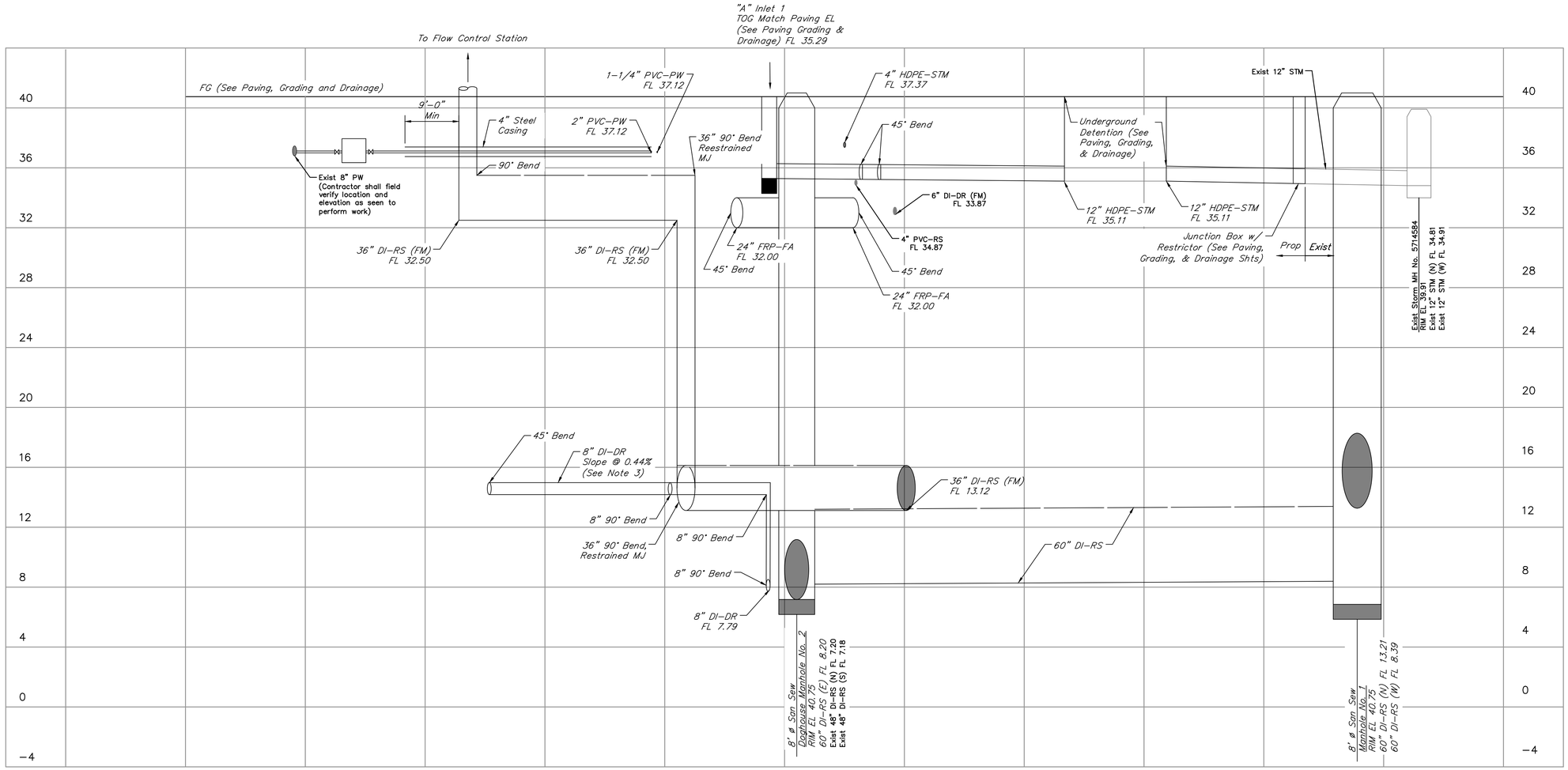

BASELINE B

SCALE: Horizontal 1" = 10'
SCALE: Vertical 1" = 4'

NOTES:

1. Locations of underground facilities are per record drawings. Contractor shall field verify line sizes, use, and location of underground facilities prior to removal. Engineer to approve of all deviations.
2. Electrical ductbanks shall maintain a minimum horizontal distance of 3'-0" between proposed pipes.
3. Contractor shall coordinate flowlines of pipe and fittings based on the existing FL of 36" DI-RS (FM) at the tie-in location and required orientation of pipe and fittings to make connection. Contractor shall field verify the existing 36" DI-RS pipe elevation and location at the proposed tie-in location and report findings to Engineer prior to submitting shop drawings.

QUIDDITY
Texas Board of Professional Engineers and Land Surveyors Reg. No. F-23290
6330 West Loop South, Suite 150 • Bellaire, TX 77401 • 713.777.5337

JOB NO: 00050-0099-01 DATE: 1/19/2026

APPROVED BY:

DATE: MAY 2026

DESIGNED BY: MBMITCHELL

DRAWN BY: SSOMMERS

SURVEYED BY:

FB NO. XXXXXX

INTERIM REVIEW
Not intended for construction, bidding or permit purposes.
Engineer: HARRY W. ISENSEE III, P.E.
P.E. Serial No.: 144401
Date: MAY 2026

CITY OF HOUSTON
HOUSTON PUBLIC WORKS

SCOTT STREET NO. 1 LIFT STATION REHABILITATION

CIVIL

PROPOSED YARD PIPING BASELINE B

WBS NUMBER
R-000267-127A-4
DRAWING SCALE
AS NOTED
CITY OF HOUSTON PM
TAHA LOTIA
DWG NO. 0-C-12
SHEET NO. 20 OF 220

FOR CITY OF HOUSTON USE ONLY

K:\00050\00050-0099-01 Scott St. No. 1 Lift Station Rehabilitation - Phase II Design\2 Design Phase\CAD\CIVIL-PR.dwg

ORIGINAL SCALE IN INCHES FOR REDUCED PLANS

NO.	DATE	REVISIONS	APP.

NOTES:

1. Locations of underground facilities are per record drawings. Contractor shall field verify line sizes, use, and location of underground facilities prior to removal. Engineer to approve of all deviations.
2. The designated existing pipe shall extend a minimum of 2'-0" from the edge of the structure. Contractor shall provide and install restrained couplings to transition and connect to proposed piping.
3. Contractor shall coordinate flowlines of pipe and fittings based on the existing FL of 36" DI-RS (FM) at the tie-in location and required orientationof pipe and fittings to make connection. Contractor shall field verify the existing 36" DI-RS pipe elevation and location at the proposed tie-in location and report findings to Engineer prior to submitting shop drawings.

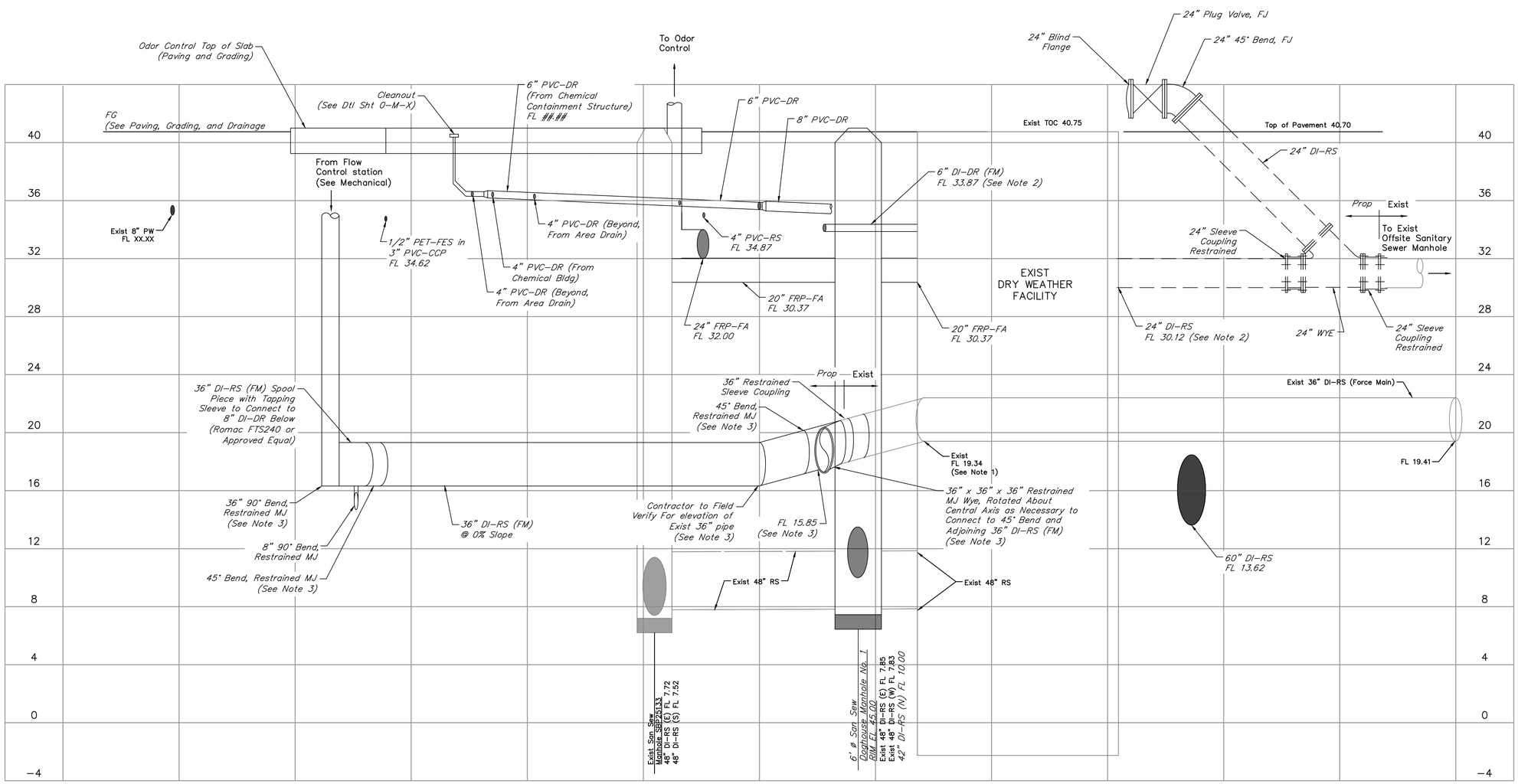

BASELINE C

SCALE: Horizontal 1" = 10'
SCALE: Vertical 1" = 4'

K:\00050\00050-0099-01 Scott St. No. 1 Lift Station Rehabilitation - Phase II Design\2 Design Phase\CAD\CIVIL-PR.dwg

QUIDDITY
Texas Board of Professional Engineers and Land Surveyors Reg. No. F-23290
6330 West Loop South, Suite 150 • Bellaire, TX 77401 • 713.777.5337

JOB NO: 00050-0099-01 DATE: 1/19/2026

APPROVED BY:
DATE: MAY 2026
DESIGNED BY: MBMITCHELL
DRAWN BY: SSOMMERS
SURVEYED BY:
FB NO. XXXXXX

INTERIM REVIEW
Not intended for construction, bidding or permit purposes.
Engineer: HARRY W. ISENSEE III, P.E.
P.E. Serial No.: 144401
Date: MAY 2026

CITY OF HOUSTON
HOUSTON PUBLIC WORKS

SCOTT STREET NO. 1 LIFT STATION REHABILITATION

CIVIL

PROPOSED YARD PIPING BASELINE C

WBS NUMBER	FOR CITY OF HOUSTON USE ONLY
R-000267-127A-4	
DRAWING SCALE	
AS NOTED	
CITY OF HOUSTON PM	
TAHA LOTIA	
DWG NO. O-C-13	
SHEET NO. 21 OF 220	

ORIGINAL SCALE IN INCHES FOR REDUCED PLANS

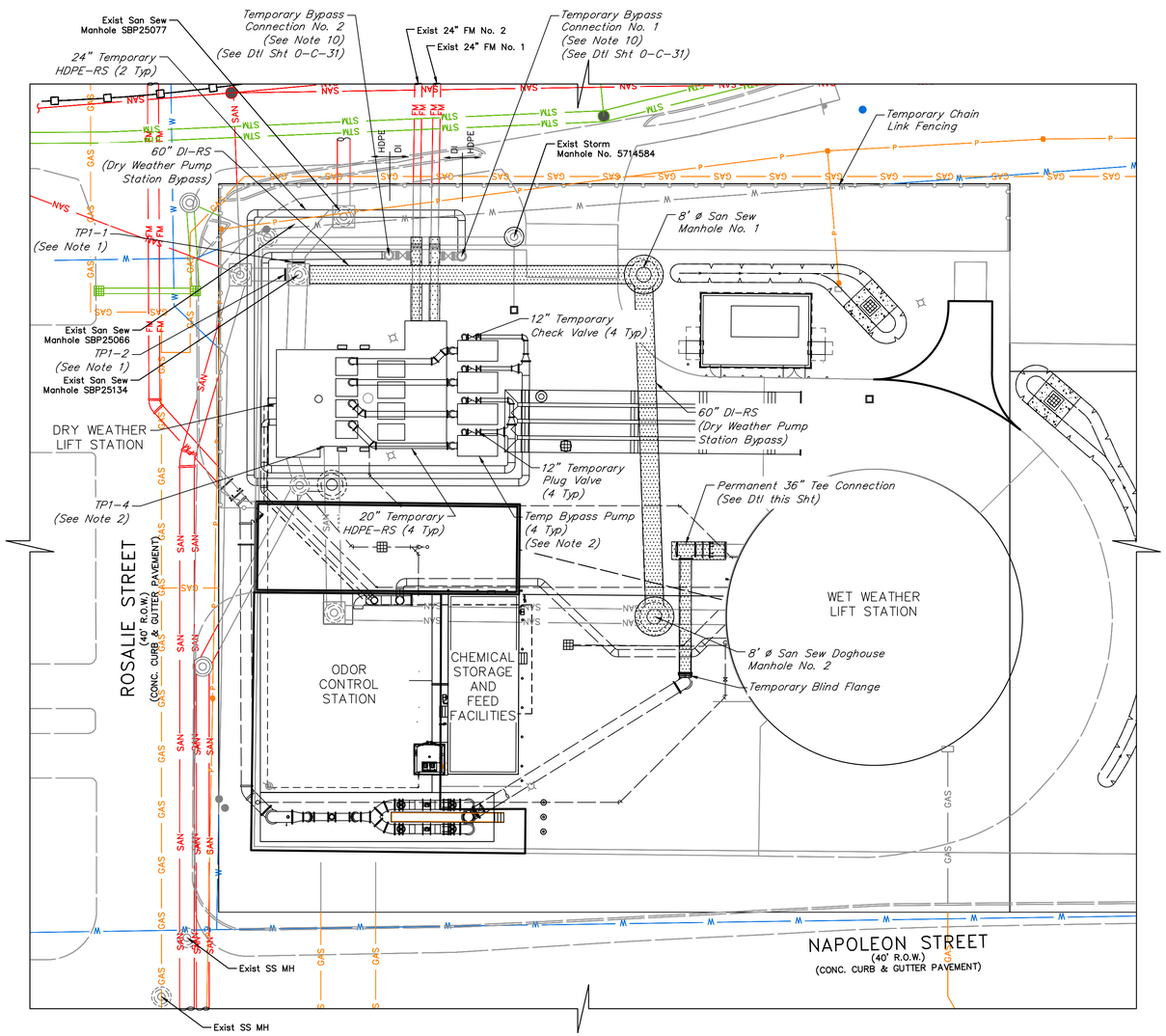

PHASE 1:

OBJECTIVE:	Install Permanent Bypass Connection Nos. 1 & 2 and set up and operate phase 1 bypass pump system to install 60" DI-RS, San Sew MH No. 1 and San Sew Doghouse MH No. 2. Phase 1 Bypass shall be performed and completed during dry weather flow.
1	Contractor shall coordinate with CIP Project Manager and WWOPS to isolate exist 24" FM No. 1 and temporarily route all dry weather pump station flow through exist 24" FM No. 2 to install Temporary Bypass Connection No. 1 and temporary 24" MJ Plug, and to demolish existing sanitary sewer manhole and 24" FM section between dry weather lift station structure and Temporary bypass connection.
2	Contractor shall coordinate with CIP Project Manager and WWOPS to isolate exist 24" FM No. 2 and temporary route all dry weather pump station flow through exist 24" FM No. 1 to install temporary Bypass Connection No. 2 and temporary 24" mechanical plug, and to demolish existing sanitary sewer manhole and 24" FM section between dry weather lift station structure and temporary bypass connection.
3	Contractor shall set up and put bypass pump system into service. Influent raw sewage shall flow into the exist Dry Weather Lift Station wet well. Contractor shall coordinate with Operator to remove existing Dry Weather Lift Station pumps and controls from service. Bypass pump system shall suction lift from wet well and pump flow into and through the existing force mains via Termporary Bypass Connection Nos. 1 & 2.
4	Perform all work necessary to install proposed 60" DI-RS, San Sew MH No. 1 and San Sew Doghouse MH No. 2.
5	Contractor shall construct proposed Permanent 36" Tee Connection and install temporary mechanical plug a minimum 10' west of San Sew Doghouse MH No. 2.
6	Contractor shall demolish exist Storm Inet No. 5714589 and exist 12" RCP-STM up to Exist Storm MH No. 5714584 as necessary to complete installation of proposed 60" DI-RS and San Sewe MH No. 1. Contractor shall maintain site drainage throughout construction so as not to negatively impact adjacent landowners.
7	Install temporary power and controls to existing chemical feed facility. De-energize and demolish existing ductbank to existing lift station and existing chemical feed facility upon completion of permanent bypass connections and upon start up of Bypass Pump System.

BYPASS NOTES:

1. Contractor shall install temporary pneumatic plugs TP1-1 and TP1-2, and TP1-3 as necessary to make proposed 60" DI-RS connection to Exist San Sew MH SBP25134. Contractor shall take all measures to limit duration of temporary plug operation. Contractor shall monitor water surface upstream of temporary plugs TP1-1 and TP1-2. Contractor shall provide and install additional bypass pumps as required to pump from Exist San Sew MH SBP25066 and SBP25077 to Dry Weather Wet Well as required and as directed by the Engineer. Include cost in base bid.
2. Contractor shall install temporary pneumatic plug TP1-4 as necessary to isolate flow to Wet Weather Facility to install proposed 60" DI-RS, San Sew MH No. 1, and, San Sew Doghouse MH No. 2.
3. For the duration of bypass phase 1, water surface in Dry weather Wet Well and upstream sanitary sewer manholes shall not exceed 22.0' at any time during bypass operation.
4. Contractor shall assume all responsibility for providing adequate system monitoring including cellular autodialer, floats and controls, bypass set-up, operation, and spills (no separate pay). Bypass pumping shall include delivery, set-up, and removal for the duration of the required bypass. The bypass system shall provide a total flow of 15,278 gpm with 4 pumps (3 duty, 1 spare) at Duty Point 1A and Duty Point 1B (Specification 01652).
5. Contractor shall secure and maintain all bypass pumping equipment at all times.
6. Contractor shall be responsible for leaks an cleanup related to bypass system at no additional cost to Owner. Contractor shall alert the Owner of any leaks or spills immediately.
7. Contractor shall provide and install all the plugs, valves, fittings, blocks, restraints, supports, pumps, controls, monitoring, piping, and labor required for controlling and diverting necessary for the work and preventing interruption of service, surcharging the system and/or overflowing the system.
8. All temporary piping shall be PVC or fusion welded HDPE, or flanged composite pipe with steel reinforcement (Midwest Hose & Specialty or approved equal).
9. Bypass shall remain in place until work completed under Phase 1 has been inspected and approved for temporary construction service.
10. Contractor shall coordinate with the CIP Project Manager and WWOPS prior to putting the Dry Weather Lift Station out of service for bypass pumping.
11. Contractor shall provide and install additional bypass pump system to convey wet weather flow for duration that overflow to wet weather facility is out of service as required by Engineer. Include in base bid. This work is to be performed at low flow.
12. Exist manhole location upstream of San Sew MH SBP25137 shown per record drawings. Contractor shall field verify location of Exist MH upstream of San Sew MH SBP25137 prior to commencing Bypass Phase 2 and report findings to Engineer unless directed otherwise. Contractor shall monitor water surface elevation.
13. Contractor shall coordinate with Operator to adjust the Wet Weather pump calls above Dry Weather pump system pump calls.
14. Lift Station shall be shut down for a maximum of 4 hours during non-peak flow or as approved by WWOPS.
15. Permanent 36" Tee shall be a restrained mechanical joint connection. Refer to Sht. 0-C-9.

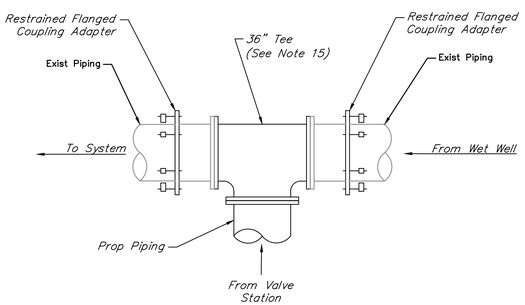

PERMANENT 36" TEE DETAIL
SCALE - 1/4"=1'

NO.	DATE	REVISIONS	APP.

0 5 10 20 40 60
SCALE: 1" = 20'

LEGEND:
- To Be Constructed
- Constructed
- TP#-# Temporary Pneumatic Plug
  - Plug No.
  - Phase No.

QUIDDITY
Texas Board of Professional Engineers and Land Surveyors Reg. No. F-23290
6330 West Loop South, Suite 150 • Bellaire, TX 77401 • 713.777.5337

JOB NO: 00050-0099-01 DATE: 1/19/2026

APPROVED BY:
DATE: MAY 2026
DESIGNED BY: MBMITCHELL
DRAWN BY: JMMUSSO
SURVEYED BY:
FB NO. XXXXXX

INTERIM REVIEW
Not intended for construction, bidding or permit purposes.
Engineer: HARRY W. ISENSEE III, P.E.
P.E. Serial No.: 144401
Date: MAY 2026

CITY OF HOUSTON
HOUSTON PUBLIC WORKS

SCOTT STREET NO. 1 LIFT STATION REHABILITATION
CIVIL
CONSTRUCTION SEQUENCING AND PHASE 1 BYPASS

WBS NUMBER	FOR CITY OF HOUSTON USE ONLY
R-000267-127A-4	
DRAWING SCALE	
AS NOTED	
CITY OF HOUSTON PM	
TAHA LOTIA	
DWG NO. 0-C-14	
SHEET NO. 22 OF 220	

K:\00050\00050-0099-01 Scott St. No. 1 Lift Station Rehabilitation - Phase II Design\2 Design Phase\CAD\CIVIL-PR.dwg

ORIGINAL SCALE IN INCHES FOR REDUCED PLANS

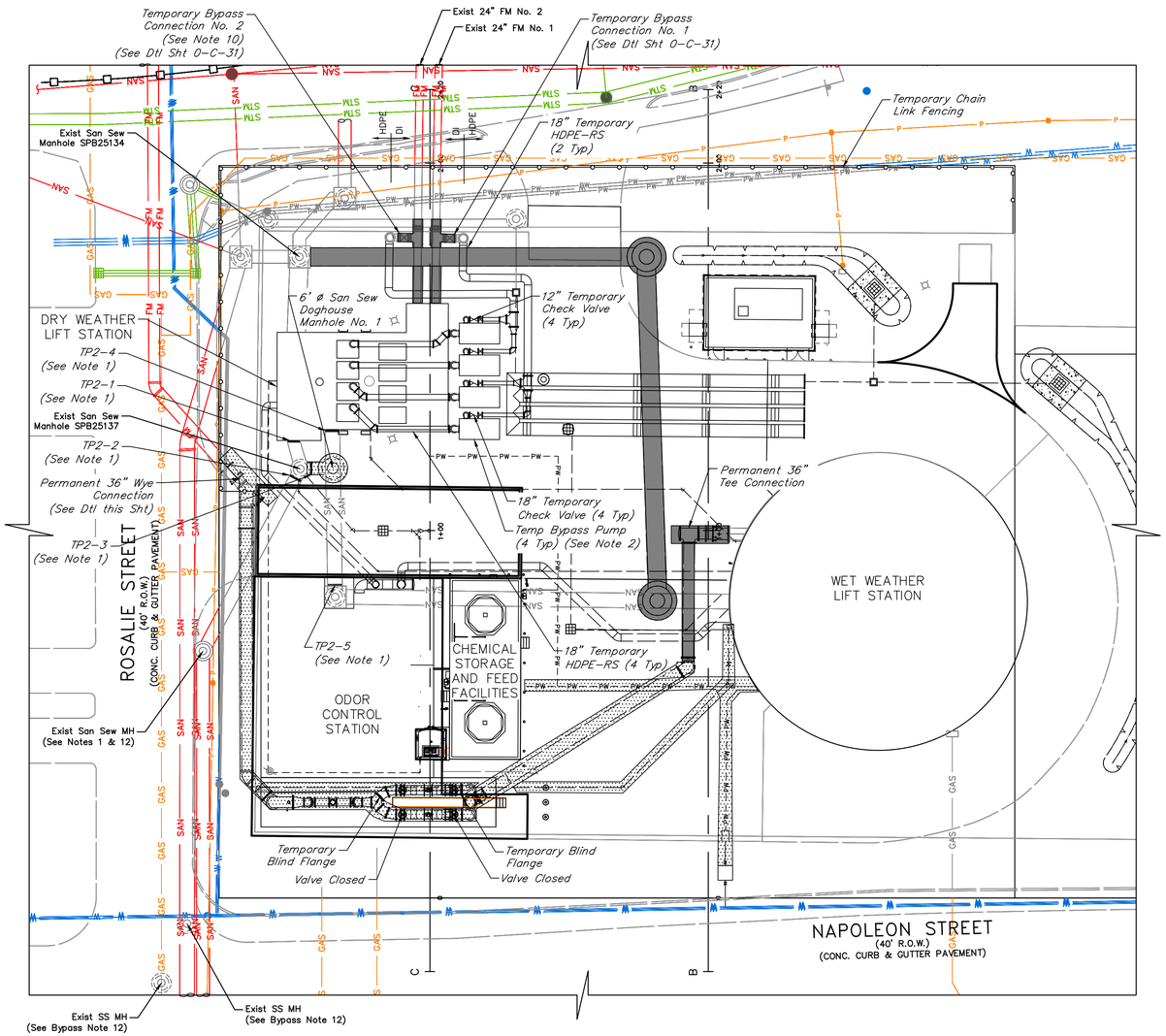

PHASE 2:

OJECTIVE:	Set up and operate Phase 2 Bypass Pump System. Construct proposed San Sew Doghouse Manhole No. 1 and 42" DI-RS Overflow. Complete Permanent 36" Tee Connection, construct Permanent 36" Permanent Wye Connection, and 8" drain line from 36" tap up to Phase 1 constructed 36" FM shall be performed and completed during dry weather flow and through exterior wall of wet weather facility.
1	Contractor shall set up and operate Phase 2 Bypass Pump System. Influent raw sewage shall flow into the exist Dry Weather Lift Station wet well. Contractor shall coordinate with Operator to remove existing Dry Weather Lift Station pumps and controls from service. Bypass pump system shall suction lift from wet well and pump flow into and through the existing force mains via Temporary Bypass Connection Nos. 1 & 2.
2	Install TP2-1 & TP2-2 as necessary to connect proposed 42" DI-RS at exist San Sew MH SBP25137 and construct Doghouse MH No. 1 Phase 2, Objective 2 work shall be performed within the lowest consecutive 8-hour dry weather flow period. Flow through plug may be used as alternate to TP2-1 and TP2-2.
3	Install TP2-3 & TP2-4, and TP2-5 and remove TP2-1 and TP2-2 as necessary to construct Doghouse MH No. 1 and restore sanitary sewer flow to Dry Weather Lift Station via existing 42" San Sew.
4	Construct proposed potable water, including permanent connection to and from the Wet Weather Facility. Install temporary connection to exist chemical feed facility.
5	Contractor shall complete construction of Permanent 36" Tee Connection by removing connection to existing 36" and installing mechanical plug. Contractor shall construct the remaining segment of 36" DI-RS from permanent 36" Tee Connection to Flow Control Valve Station, Flow Control Valve Station, Flow Control Valve and 36" DI-RS from Flow Control Valve Station to 36" wye connection. Flow control valve station header 1 must be constructed and the isolation valves must be operational. A temporary spool piece shall be installed in place of flow control valve until all wet weather facility improvements have been completed.

BYPASS NOTES:

1. Contractor shall install temporary pneumatic plugs as necessary to make proposed connection to Exist San Sew MH. Contractor shall take all measures to limit duration of temporary plug operation. Contractor shall monitor water surface upstream plugs at upstream manhole. Contractor shall provide and install additional bypass pumps as required to pump from Exist San Sew MH SPB25137 to Dry Weather Wet Well as required and as directed by the Engineer. Include cost in base bid.
2. For the duration of bypass phase 2, water surface in Dry Weather Wet Well and upstream sanitary sewer manholes shall not exceed 22.0' at any time during bypass operation.
3. Contractor shall assume all responsibility for providing adequate system monitoring including cellular autodialer, floats and controls, bypass set-up, operation, and spills (no separate pay). Bypass pumping shall include delivery, set-up, and removal for the duration of the required bypass. The bypass system shall provide a total flow of 15,278 gpm with 4 pumps (3 duty, and 1 spare) at Duty Point 2A and Duty Point 2B (Specification 01652).
4. Contractor shall secure and maintain all bypass pumping equipment at all times.
5. Contractor shall be responsible for leaks an cleanup related to bypass system at no additional cost to Owner. Contractor shall alert the Owner of any leaks or spills immediately.
6. Contractor shall provide and install all the plugs, valves, fittings, blocks, restraints, supports, pumps, controls, monitoring, piping, and labor required for controlling and diverting necessary for the work and preventing interruption of service, surcharging the system and/or overflowing the system.
7. All temporary piping shall be PVC or fusion welded HDPE or flanged composite pipe (Midwest Hose & Specialty or approved equal).
8. Bypass shall remain in place until work completed under Phase 2 has been inspected and approved for temporary construction service.
9. Contractor shall coordinate with CIP Project Manager and WWOPS prior to shutting down the Dry Weather Lift Station for bypass pumping.
10. Contractor shall provide and install additional bypass pump system to convey wet weather flow for duration that overflow to wet weather facility is out of service as required by Engineer. Include in base bid.
11. Exist manhole location upstream of San Sew MH SBP25137 shown per record drawings. Contractor shall field verify location of Exist MH upstream of San Sew MH SBP25137 prior to commencing Bypass Phase 2 and report findings to Engineer unless directed otherwise. Contractor shall monitor water surface elevation.
12. Contractor shall coordinate with Operator to adjust the Wet Weather pump calls above Dry weather pump system pump calls.
13. Permanent 36" Wye shall be a restrained mechanical joint connection. Refer to Sht. 0-C-9.

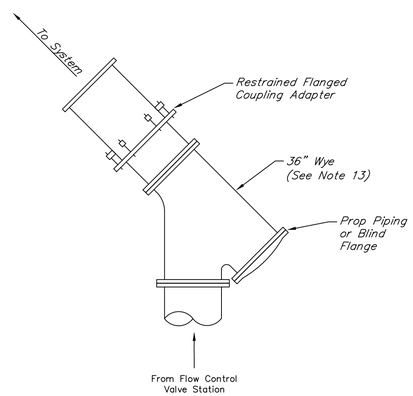

PERMANENT 36" WYE DETAIL
SCALE - 1/4"=1'

NO.	DATE	REVISIONS	APP.



0 5 10 20 40 60
SCALE: 1" = 20'

LEGEND:

- To Be Constructed
- Constructed
- TP#-# Temporary Pneumatic Plug
  - Plug No.
  - Phase No.

QUIDDITY
Texas Board of Professional Engineers and Land Surveyors Reg. No. F-23290
6330 West Loop South, Suite 150 • Bellaire, TX 77401 • 713.777.5337

JOB NO: 00050-0099-01 DATE: 1/19/2026

APPROVED BY:
DATE: MAY 2026
DESIGNED BY: MBMITCHELL
DRAWN BY: JMMUSSO
SURVEYED BY:
FB NO. XXXXXX

INTERIM REVIEW
Not intended for construction, bidding or permit purposes.
Engineer: HARRY W. ISENSEE III, P.E.
P.E. Serial No.: 144401
Date: MAY 2026

CITY OF HOUSTON
HOUSTON PUBLIC WORKS

SCOTT STREET NO. 1 LIFT STATION REHABILITATION

CIVIL

CONSTRUCTION SEQUENCING AND PHASE 2 BYPASS

WBS NUMBER	FOR CITY OF HOUSTON USE ONLY
R-000267-127A-4	
DRAWING SCALE	
AS NOTED	
CITY OF HOUSTON PM	
TAHA LOTIA	
DWG NO. 0-C-15	
SHEET NO. 23 OF 220	

K:\00050\00050-0099-01 Scott St. No. 1 Lift Station Rehabilitation - Phase II Design\2 Design Phase\CAD\CIVIL-PR.dwg

ORIGINAL SCALE IN INCHES FOR REDUCED PLANS

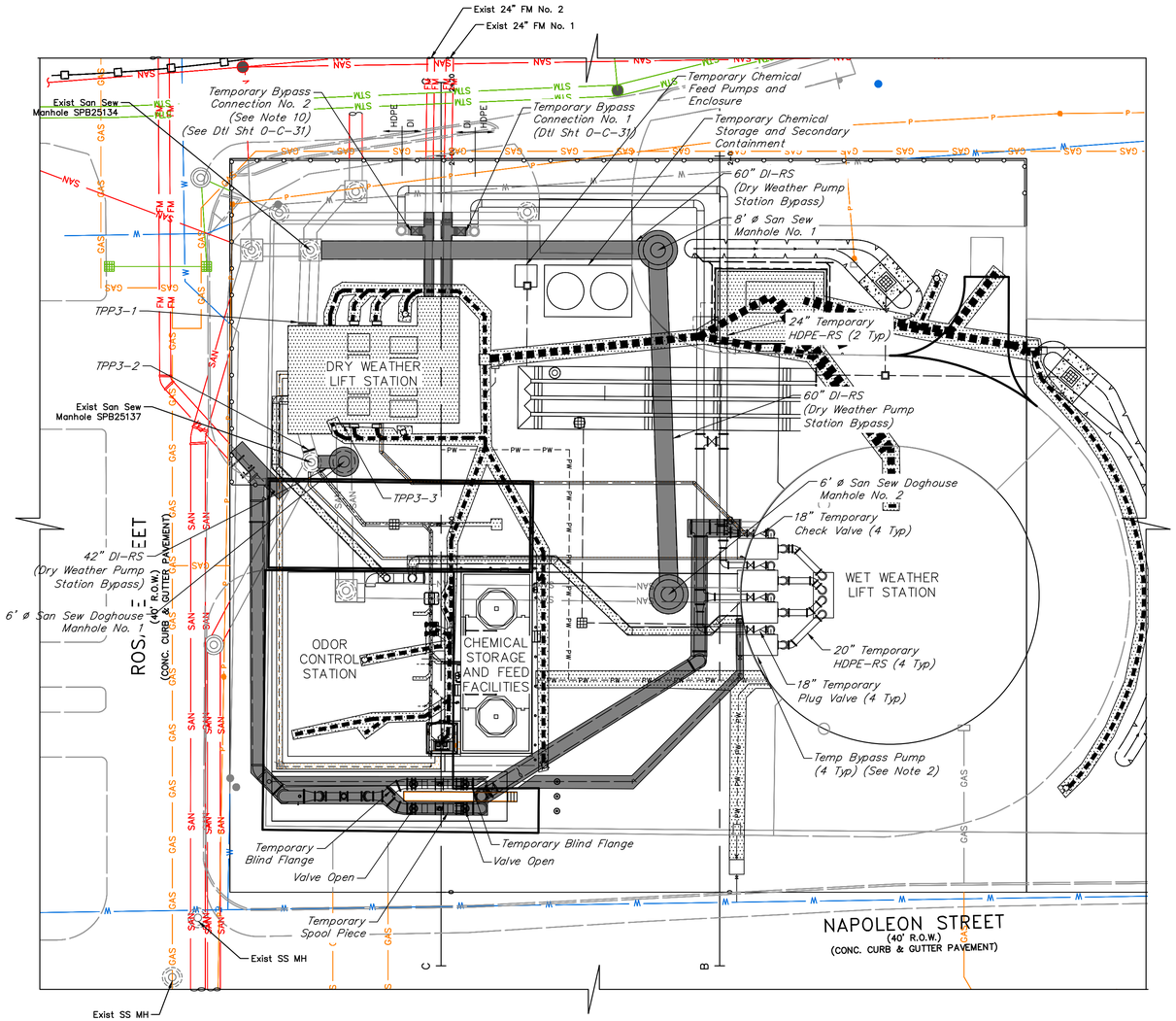

PHASE 3:

OJECTIVE:	Set up and operate Phase 3 Bypass Pump System. Set up and operate Temporary Chemical Storage and Chemical Feed System. Construct Dry Weather Lift Station Improvements. Construct proposed Chemical Storage and Feed Facility Replacement. Construct Odor Control Station. Construct Electrical Building No. 2.
1	Contractor shall set up and operate Phase 3 Bypass Pump System. Contractor shall install and maintain temporary plugs to isolate the Dry Weather Lift Station from influent raw sewage. Influent raw sewage shall be diverted to the Wet Weather Wet Well via the 60" DI-RS and 42" Di-RS bypass lines installed in Phases 1 & 2. Contractor shall coordinate with Operator to adjust Wet Weather Pump settings. Contractor shall coordinate with Operator to lock out Wet Weather Drain Pump Nos. 1 & 2 from service for the duration that Dry Weather Lift Station is out of service. 6" drain lines in the Wet Weather Lift Station shall have exist isolation valves turned to the closed position prior to demolition of the existing 6" DI-DR (FM) line in the yard. Bypass pump system shall suction lift from Wet Weather Wet Well and pump flow into and through the existing force mains via Temporary Bypass Connection Nos. 1 & 2.
2	Contractor shall provide, install, operate, and maintain temporary chemical storage tanks and temporary chemical feed equipment. Minimum required temporary chemical storage capacity shall be 18,750 gallons. Chemical storage tanks shall have secondary containment instrumentation to detect leak. Temporary chemical metering pumps and controls shall be provided as described in Specification Section 11161. Contractor shall provide, install, and maintain temporary chemical discharge piping to convey chemical from temporary chemical feed system to wet weather wet well. Contractor shall provide temporary power for duration of temporary chemical system operation and until proposed chemical facilities demonstration period has concluded and the facilities are approved for temporary construction service. Contractor shall make temporary chemical storage tanks accessible to the Operator for chemical delivery at all times. Chemical shall be supplied by the Owner. Contractor shall monitor the chemical level and coordinate with the Operator for chemical deliveries.
3	Transfer Wet Weather Lift Station service to proposed 36" DI-RS Force Main route through Flow Control Station, header 1. A temporary spool piece shall be installed in place of flow control valve until all wet weather facility improvements have been completed.
4	Contruct proposed Chemical Storage and Feed Facility Replacement.
5	Construct proposed Odor Control Station
6	Contsruct 20" FRP-AIR from Dry Weather Lift Station to Odor Control Station; 24" FRP-AIR from within 10' of Wet Weather structure to Odor Control Station; 6" DI-DR (FM) from Wet Weather Lift Station to Dry Weather Lift Station; 4" DI-DR from Wet Weather Lift Station to Exist San Sew MH No. SBP25137; drain piping and inlets from Chemical Containment/Odor Control/Chemical Delivery Lane to Exist San Sew MH No. SBP25137.
7	Construct Electrical Building No. 2 and electrical ductbank to/from Electrical Building No. 2

BYPASS NOTES:

1. Contractor shall install temporary pneumatic plug TPP3-1, TPP3-2 and TPP3-3 as necessary to isolate the Dry Weather Lift Station Wet Well from service and direct all influent raw sewage to the Wet Weather Wet Well.
2. For duration of Bypass Phase 3, water surface elevation in the Wet Weather Wet Well shall not exceed 22.0' at any time.
3. Contractor shall assume all responsibility for providing adequate system monitoring including cellular autodialer, floats and controls, bypass set-up, operation, and spills (no separate pay). Bypass pumping shall include delivery, set-up, means and methods, and removal for the duration of the required bypass. The bypass system shall provide a total flow of 15,278 gpm with 4 pumps (3 duty, 1 spare), at Duty Point 3A and Duty Point 3B (Specification 01652)..
4. Contractor shall secure and maintain bypass pumping equipment at all times.
5. Contractor shall be responsible for leaks and cleanup related to bypass system at no additional cost to Owner. Contractor shall alert Owner of any leaks or spills immediately.
6. Contractor shall provide and install all plugs, valves, fittings, blocks, restraints, supports, pumps, controls, monitoring, piping, and labor required for controlling and diverting flow as necessary to perform work and preventing interruption of service, surcharging the system and/or overflowing the system.
7. All temporary piping shall be PVC or fusion welded HDPE, or flanged composite pipe with steel reinforcement (Midwest Hose & Specialty or approved equal).
8. Bypass shall remain in place until work completed under Phase 3 has been inspected and approved for temporary construction service.
9. Contractor shall coordinate with the Operator and Engineer prior to removing the Dry Weather Lift Station for service for bypass pumping.
10. Contractor shall coordinate with the Operator and Engineer prior to operate Wet Weather Lift Station during a wet weather event.
11. Operator shall dewater the dry weather lift station down to the existing all pumps off elevation (~5.5' above FF). Contractor shall remove all remaining bulk liquid, grit, solid, and semi-solid materials and dispose at a TCEQ permitted facility.

NO.	DATE	REVISIONS	APP.

0 5 10 20 40 60

SCALE: 1" = 20'

LEGEND:

- To Be Constructed
- Constructed
- TP#-# Temporary Pneumatic Plug
  - Plug No.
  - Phase No.

QUIDDITY

Texas Board of Professional Engineers and Land Surveyors Reg. No. F-23290
6330 West Loop South, Suite 150 • Bellaire, TX 77401 • 713.777.5337

JOB NO: 00050-0099-01 DATE: 1/19/2026

APPROVED BY:

DATE: MAY 2026

DESIGNED BY: MBMITCHELL

DRAWN BY: JMMUSSO

SURVEYED BY:

FB NO. XXXXXX

INTERIM REVIEW
Not intended for construction, bidding or permit purposes.
Engineer: HARRY W. ISENSEE III, P.E.
P.E. Serial No.: 144401
Date: MAY 2026

CITY OF HOUSTON
HOUSTON PUBLIC WORKS

SCOTT STREET NO. 1 LIFT STATION REHABILITATION

CIVIL

CONSTRUCTION SEQUENCING AND PHASE 3 BYPASS

WBS NUMBER	FOR CITY OF HOUSTON USE ONLY
R-000267-127A-4	
DRAWING SCALE	
AS NOTED	
CITY OF HOUSTON PM	
TAHA LOTIA	
DWG NO. 0-C-16	
SHEET NO. 24 OF 220	

K:\00050\00050-0099-01 Scott St. No. 1 Lift Station Rehabilitation - Phase II Design\2 Design Phase\CAD\CIVIL-PR.dwg

ORIGINAL SCALE IN INCHES FOR REDUCED PLANS

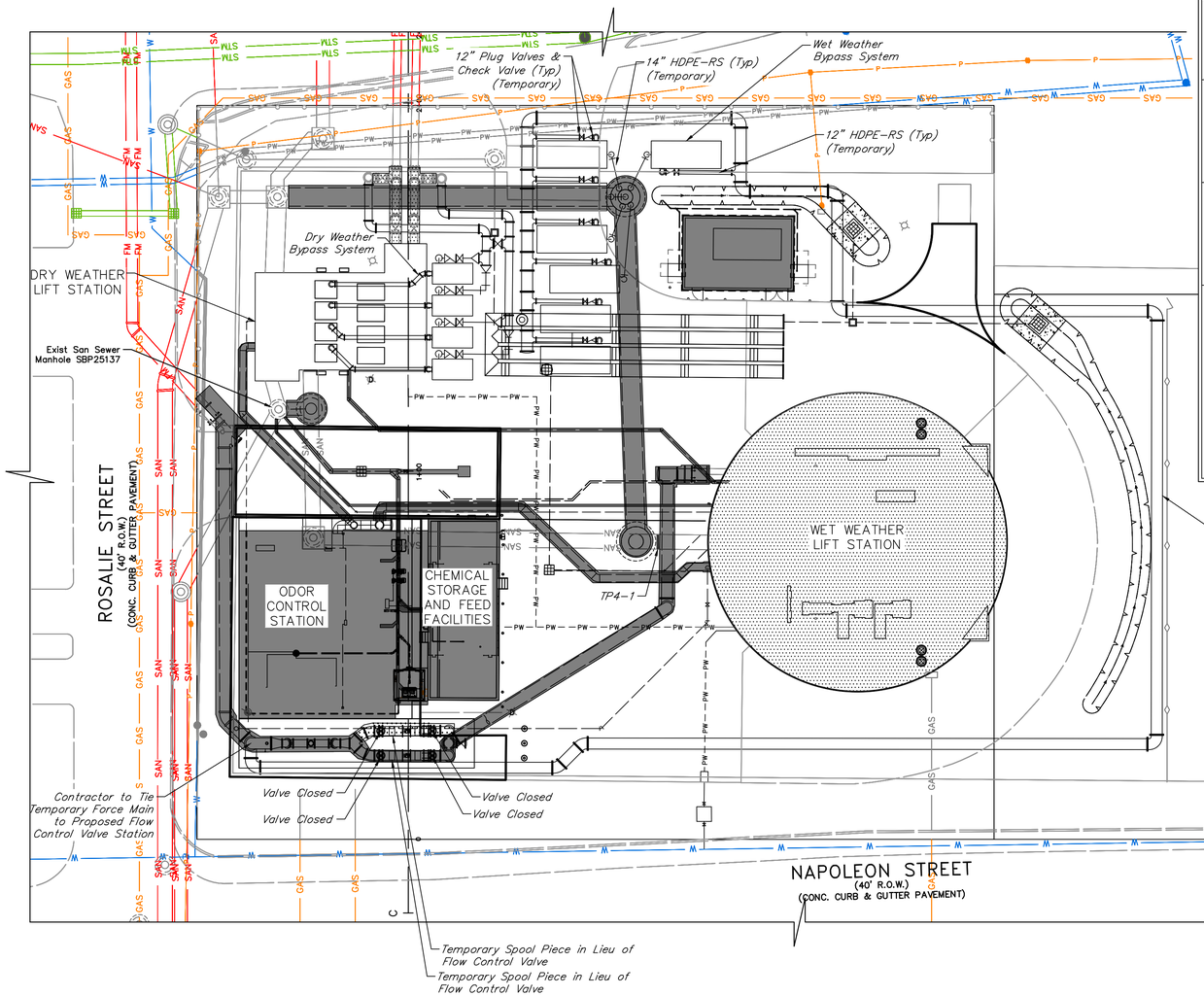

PHASE 4

OBJECTIVE	Contractor shall Set-up Bypass Systems and Perform Construction at the Odor Control System, and Wet Weather Facility.
1	Contractor shall Set-up Bypass System for Wet Weather Facility, See Notes this Sheet.
2	Contractor shall Set-Up Wet Weather Bypass System. Dry Weather Phase 4 Bypass System shall match Dry Weather Phase 2 Bypass System.
3	Prior to Placing Bypass System Online Contractor shall install Blind Flanges on Tees.
4	Contractor to Perform Rehabilitation work at the Wet Weather Facility. Contractor shall provide Temporary power to Dry Weather Pump Station while work at the Wet Weather Station is being completed.
5	Contractor shall provide temporary power and equipment to wet weather facility as necessary to complete the work. (i.e. lighting, ventilation, tools, etc)
6	Contractor shall provide temporary power to the chemical storage and feed facility.
7	Odor Control System shall not be put into operation until all wet weather facility improvements are complete and the wet weather facility has been started up and demonstration period as been completed and the system approved for service.
8	Flow control station header 2 shall be constructed. Spool pieces shall be temporarily installed in place of flow control valves and flow control valves shall not be installed until all wet weather facility improvements are complete and are ready for start up testing and demonstration.
9	Complete construction of all Electrical. Complete construction of all underground piping, electrical ductbank, and underground storm systems. Complete construction of all site work, paving, grading, and drainage, and site restoration.
10	Upon completion of successful startup and demonstration of dry weather and wet weather lift stations, and as approved by COH and Engineer, Contractor shall remove temporary force main bypass connections and shall install permanent force main bypass connections. Contractor shall coordinate with COH to isolate 24" FM No. 1 and temporarily route all flow through exist 24" FM No. 2 to install Permanent Bypass Connection No. 1. Once Permanent Bypass Connection No. 1 is installed, Contractor shall coordinate with COH to isolate 24" FM No. 2 and temporarily route all flow through 24" FM No. 1 to install Permanent Bypass Connection No. 2.

WET WEATHER BYPASS NOTES:

1. Contractor shall install temporary pneumatic plug TPP4-1 as necessary to isolate the Wet Weather Lift Station Wet Well from service. Wet Weather Bypass pumps shall pull suction lift from San Sew MH No.1.
2. Contractor shall assume all responsibility for providing adequate system monitoring including cellular autodialer, floats and controls, bypass set-up, operation, and spills (no separate pay). Bypass pumping shall include delivery, set-up, means of power, and removal for the duration of the required bypass. The bypass system shall provide a total flow of 34,722 gpm with 8 pumps (7 duty, 1 spare), at 4,960 gpm per pump at 85' TDH.
3. Water surface elevation in the bypass manhole shall not exceed 30.25 feet at any time during wet weather flow event while the wet weather facility is out of service.
4. Contractor shall coordinate with the operator and install floats inside the bypass manhole at elevations necessary to maintain an operational system. During bypass, the contractor shall cover the manhole with a wooden lid.
5. Contractor shall secure and maintain all bypass pumping equipment at all times.
6. Contractor shall be responsible for leaks and cleanup related to bypass system at no additional cost to Owner. Contractor shall alert the Owner of any leaks or spills immediately.
7. Contractor shall provide and install all plugs, valves, fittings, blocks, restraints, supports, pumps, controls, monitoring, piping, and labor required for controlling and diverting necessary for the work and preventing interruption of service, surcharging the system and/or overflowing the system.
8. All temporary piping shall be PVC or fusion welded HDPE.
9. Bypass shall remain in place until the demonstration period has been completed.
10. Contractor shall coordinate with the Operator and Engineer prior to removing the wet weather lift station out of service for bypass pumping.
11. Contractor shall field verify the piping diameter at the bypass manhole prior to providing and installing temporary plugs.
12. Contractor is responsible for removing the manhole ring (if necessary) to allow proper installation and operation of the bypass plan. Contractor shall re-install remove manhole ring and repair the manhole to like new condition, complete with grouting, upon completion of bypass operation.

DRY WEATHER BYPASS NOTES:

1. For duration of Bypass Phase 4, water surface elevation in Dry Weather Wet Well shall not exceed 22.0' at any time during dry weather flow.
2. Contractor shall assume all responsibility for providing adequate system monitoring including cellular autodialer, floats and controls, bypass set-up, operation, and spills (no separate pay). Bypass pumping shall include delivery, set-up, means and methods, and removal for the duration of the required bypass. The bypass system shall provide a total flow of 15,278 gpm with 4 pumps (3 duty, 1 spare), at Duty Point 4A and Duty Point 4B (Specification 01652).
3. Contractor shall secure all bypass pumping equipment at all times.
4. Contractor shall be responsible for leaks and cleanup related to bypass system at no additional cost to Owner. Contractor shall alert the Owner of any leaks or spills immediately.
5. Contractor shall provide and install all plugs, valves, fittings, blocks, restraints, supports, pumps, controls, monitoring, piping, and labor required for controlling and diverting necessary for the work and preventing interruption of service, surcharging the system and/or overflowing the system. A minimum of one pump and one spare shall be.
6. All temporary piping shall be PVC or fusion welded HDPE.
7. Bypass shall remain in place until the demonstration period has been completed.
8. Contractor shall coordinate with the Operator and Engineer prior to shutting down the lift station for bypass pumping.
9. Contractor shall field verify the piping diameter at bypass manhole prior to providing and installing the temporary plugs.

NO.	DATE	REVISIONS	APP.

0 5 10 20 40 60

SCALE: 1" = 20'

LEGEND:

- To Be Constructed
- Constructed
- TP#-# Temporary Pneumatic Plug
  - Plug No.
  - Phase No.

QUIDDITY
Texas Board of Professional Engineers and Land Surveyors Reg. No. F-23290
6330 West Loop South, Suite 150 • Bellaire, TX 77401 • 713.777.5337

JOB NO: 00050-0099-01 DATE: 1/19/2026

APPROVED BY:

DATE: MAY 2026

DESIGNED BY: MBMITCHELL

DRAWN BY: JMMUSSO

SURVEYED BY:

FB NO. XXXXXX

INTERIM REVIEW
Not intended for construction, bidding or permit purposes.
Engineer: HARRY W. ISENSEE III, P.E.
P.E. Serial No.: 144401
Date: MAY 2026

CITY OF HOUSTON
HOUSTON PUBLIC WORKS

SCOTT STREET NO. 1 LIFT STATION REHABILITATION

CIVIL

CONSTRUCTION SEQUENCING AND PHASE 4 BYPASS

WBS NUMBER	FOR CITY OF HOUSTON USE ONLY
R-000267-127A-4	
DRAWING SCALE	
AS NOTED	
CITY OF HOUSTON PM	
TAHA LOTIA	
DWG NO.	0-C-17
SHEET NO.	25 OF 220

K:\00050\00050-0099-01 Scott St. No. 1 Lift Station Rehabilitation - Phase II Design\2 Design Phase\CAD\CIVIL-PR.dwg

0 1 2 3 4 5

ORIGINAL SCALE IN INCHES FOR REDUCED PLANS

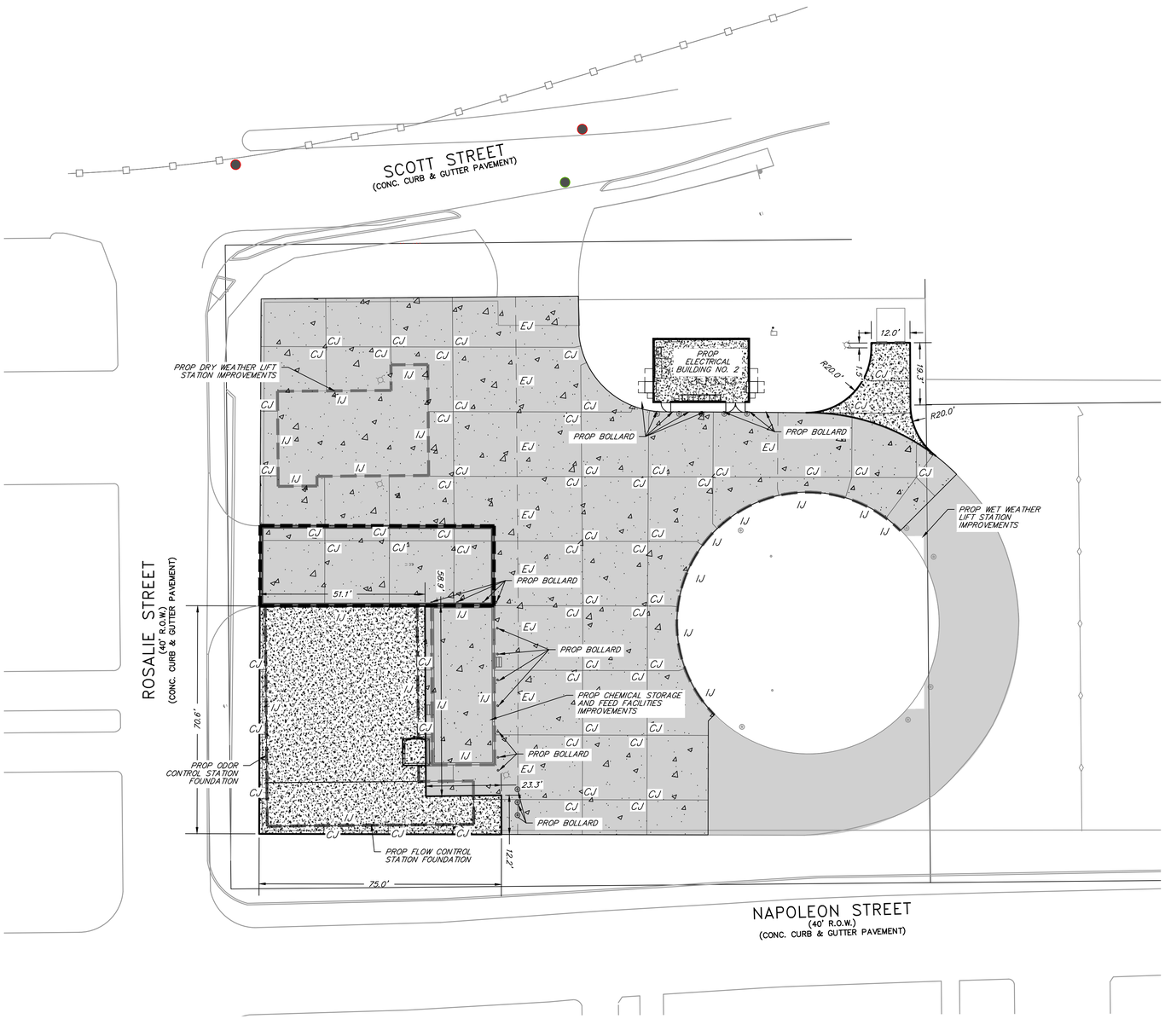

LEGEND:

EXISTING	PROPOSED	
		EDGE OF PAVEMENT
		DRAINAGE SWALE
		TOP OF BANK
		PROPERTY LINE
		PIPELINE
		EASEMENT
		FENCE
		EXISTING PAVEMENT TO REMAIN
		PROPOSED CONCRETE MAINTENANCE (TO BE REMOVED AND REPLACED)
		PROPOSED 9" REINFORCED CONCRETE
		3" ROLLOVER CURB (SEE DETAIL ON SHEET 0-C-32)
	CJ	SAW-CUT CONTROL JOINT (SEE DETAIL ON SHEETS 0-C-29 & 0-C-34)
	EJ	EXPANSION JOINT (SEE DETAIL ON SHEETS 0-C-29 & 0-C-34)
	IJ	ISOLATION JOINT (SEE DETAIL ON SHEETS 0-C-29 & 0-C-34)

NOTES:

1. CONTRACTOR TO REFER TO GEOTECHNICAL ENGINEERING REPORT NO. G118-25 PREPARED BY AVILES ENGINEERING CORPORATION FOR RECOMMENDATIONS.
2. PAVEMENT ELEVATIONS CAN BE FOUND ON SHEET 0-C-21 OF THIS PLAN SET.
3. CONTRACTOR TO FORMALLY SUBMIT A JOINT LAYOUT PLAN TO ENGINEER OF RECORD IN ACCORDANCE WITH DETAIL SHOWN ON SHEET 0-C-34 FOR APPROVAL PRIOR TO COMMENCEMENT OF WORK.
4. NO PAVING WORK IN THE RIGHT-OF-WAY.

NO.	DATE	REVISIONS	APP.

0 5 10 20 40 60

SCALE: 1" = 20'

BENCH MARK
A BRASS DISC STAMPED "RM 070215" LOCATED AT THE END OF YAUPON HOLLY LANE AT ITS INTERSECTION WITH EASTERN REDBUD LANE, ON TOP OF A "B-B" INLET AT THE NORTHWEST CORNER OF THE INTERSECTION.
ELEVATION = 64.76 FEET NAVD 88 (2001 ADJUSTMENT)

T.B.M. "A"
A CHISELED SQUARE ON THE BULL NOSE OF THE ESPLANADE LOCATED ON WEST LAKE HOUSTON PARKWAY APPROXIMATELY 970 FEET NORTH OF THE CENTERLINE INTERSECTION OF SUMMER LAKE RANCH DRIVE AND WEST LAKE HOUSTON PARKWAY.
ELEVATION = 55.34 FEET NAVD 88 (2001 ADJUSTMENT)

T.B.M. "B"
A CHISELED SQUARE ON TOP OF A "B-B" INLET AT THE SOUTHWEST CORNER OF THE INTERSECTION OF SUMMER LAKE RANCH DRIVE AND WEST LAKE HOUSTON PARKWAY.
ELEVATION = 53.67 FEET NAVD 88 (2001 ADJUSTMENT)

100-YEAR FLOOD PLAIN
ACCORDING TO MAP No. 48201C0510L OF THE FEDERAL EMERGENCY MANAGEMENT AGENCY'S (FEMA) FLOOD INSURANCE RATE MAP (FIRM) FOR HARRIS COUNTY, TEXAS AND INCORPORATED AREAS, DATED JUNE 18, 2007, THE SUBJECT TRACT IS SITUATED WITHIN UNSHADED ZONE "X"; DEFINED AS AREAS DETERMINED TO BE OUTSIDE THE 0.2% ANNUAL CHANCE FLOODPLAIN (500-YEAR FLOOD).

NOTICE:
FOR YOUR SAFETY, YOU ARE REQUIRED BY TEXAS LAW TO CALL 811 AT LEAST 48 HOURS BEFORE YOU DIG SO THAT UNDERGROUND LINES CAN BE MARKED. THIS SIGNATURE DOES NOT FULFILL YOUR OBLIGATION TO CALL 811

VERIFICATION OF PRIVATE UTILITY LINES

Date:

CenterPoint Energy natural gas utilities shown.
(Gas services lines are not shown). This signature not to be used for conflict verification.
Signature Valid for six months.

Date:

CenterPoint Energy / UNDERGROUND Electrical Facilities Verification ONLY.
(This Signature verifies existing underground facilities - not to be used for conflict verification.)
Signature Valid for six months.

Date:

Approved for AT&T Texas / SWBT underground conduit facilities only.
Signature valid for one year.

QUIDDITY
Texas Board of Professional Engineers and Land Surveyors Reg. No. F-23290
6330 West Loop South, Suite 150 • Bellaire, TX 77401 • 713.777.5337

JOB NO: 00050-0099-01 DATE: 1/19/2026

APPROVED BY:

DATE: MAY 2026

DESIGNED BY: JK

DRAWN BY: JLG

SURVEYED BY:

FB NO. XXXXXX

INTERIM REVIEW
Not intended for construction, bidding or permit purposes.
Engineer: LAUREN J. MUDD, P.E.
P.E. Serial No.: 153971
Date: MAY 2026

CITY OF HOUSTON
HOUSTON PUBLIC WORKS

SCOTT STREET NO. 1 LIFT STATION REHABILITATION
CIVIL

SITE PAVING & DIMENSION PLAN

WBS NUMBER	FOR CITY OF HOUSTON USE ONLY
R-000267-127A-4	
DRAWING SCALE	
AS NOTED	
CITY OF HOUSTON PM	
TAHA LOTIA	
DWG NO. 0-C-18	
SHEET NO. 26 OF 220	

K:\00050\00050-0099-01 Scott St. No. 1 Lift Station Rehabilitation - Phase II Design\2 Design Phase\CAD\SITE\Plans\00050-0099-01 CIVIL SHEETS.dwg

ORIGINAL SCALE IN INCHES FOR REDUCED PLANS

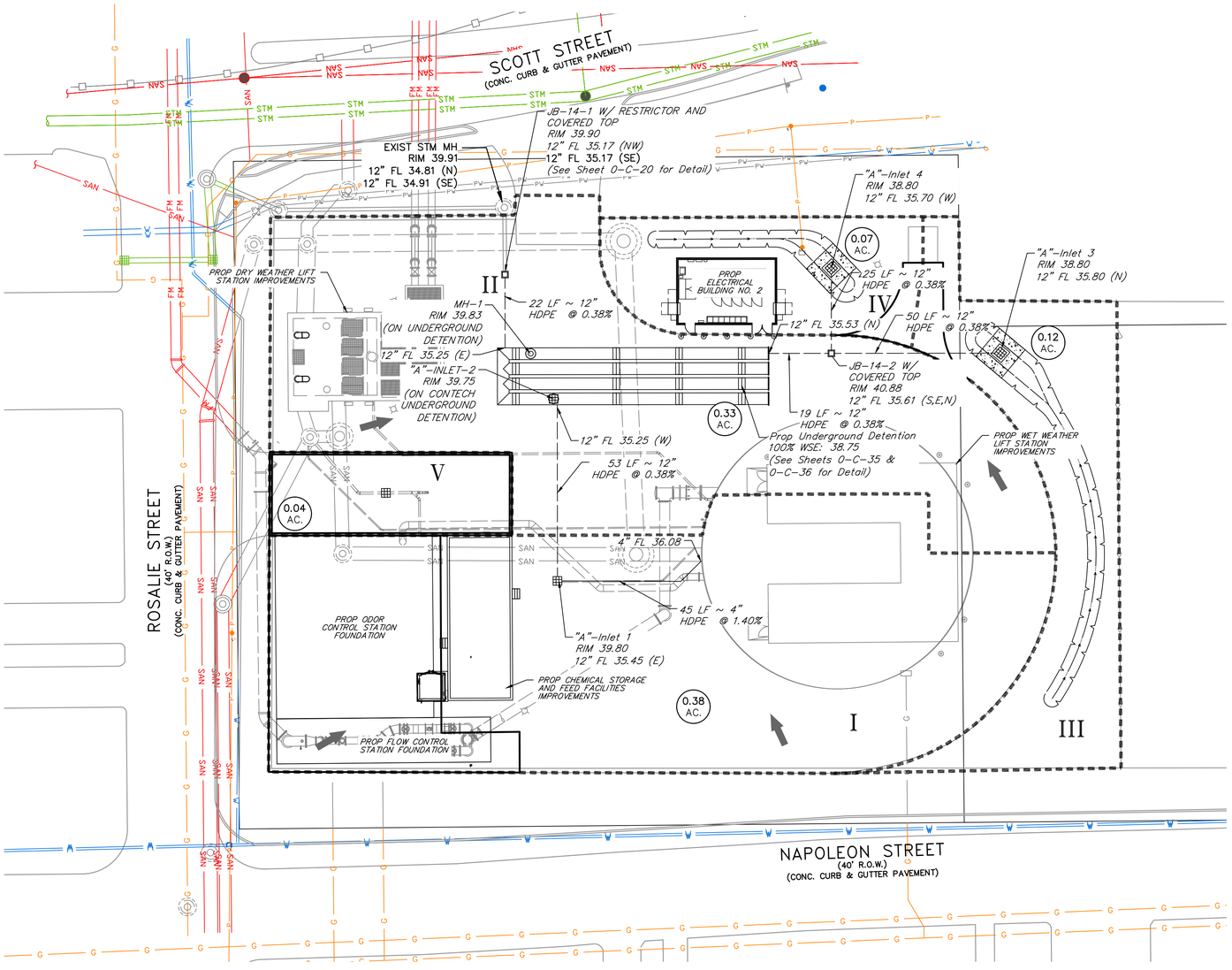

LEGEND:

EXISTING / PROPOSED

- EDGE OF PAVEMENT
- DRAINAGE SWALE
- TOP OF BANK
- PROPERTY LINE
- PIPELINE
- EASEMENT
- FENCE
- INLET 1.82 AC. — DRAINAGE AREA IN ACRES
- STORM SEWER 8.83 / 12.99 — CUMULATIVE (100 YR) RUNOFF IN C.F.S.
- DRAINAGE AREA BOUNDARY
- VII — DRAINAGE AREA NUMBER
- EXTREME EVENT ONSITE SHEET FLOW
- EXTREME EVENT OFFSITE SHEET FLOW

NOTES:

1. THE ATLAS 14 500-YEAR BASE FLOOD ELEVATION IS 37.50' PER FEMA FIS REPORT NO. 48201CV004C EFFECTIVE MAY 2, 2019.
2. MINIMUM FINISHED FLOOR FOR SCOTT STREET NO. 1 LIFT STATION REHABILITATION IS 40.50'.

DETENTION SUMMARY

Impervious Cover Calculation			Detention Calculation		
Area of Property [ac.]	Area of **Existing** Impervious Cover [ac.]	Area of **Proposed** Impervious Cover [ac.]	COH Detention Rate [ac-ft/ac]	Required Detention Storage [ac-ft]	Provided Detention Storage [ac-ft]
0.95	0.66	0.114	0.8	0.092 (4004 CF)	0.094 (4096 CF)

NOTES:

1. THE EXISTING FENCE ON SITE WILL SERVE AS THE PROJECT BOUNDARY.
2. THE EXISTING IMPERVIOUS COVER IS TO BE REMOVED AND REPLACED FOR MAINTENANCE PURPOSES ONLY.
3. NO EXISTING IMPERVIOUS COVER IS TO BE REMOVED FOR THIS PROJECT.

NO.	DATE	REVISIONS	APP.

0 5 10 20 40 60

SCALE: 1" = 20'

BENCH MARK
A BRASS DISC STAMPED "RM 070215" LOCATED AT THE END OF YAUPON HOLLY LANE AT ITS INTERSECTION WITH EASTERN REDBUD LANE, ON TOP OF A "B-B" INLET AT THE NORTHWEST CORNER OF THE INTERSECTION.
ELEVATION = 64.76 FEET NAVD 88 (2001 ADJUSTMENT)

T.B.M. "A"
A CHISELED SQUARE ON THE BULL NOSE OF THE ESPLANADE LOCATED ON WEST LAKE HOUSTON PARKWAY APPROXIMATELY 970 FEET NORTH OF THE CENTERLINE INTERSECTION OF SUMMER LAKE RANCH DRIVE AND WEST LAKE HOUSTON PARKWAY.
ELEVATION = 55.34 FEET NAVD 88 (2001 ADJUSTMENT)

T.B.M. "B"
A CHISELED SQUARE ON TOP OF A "B-B" INLET AT THE SOUTHWEST CORNER OF THE INTERSECTION OF SUMMER LAKE RANCH DRIVE AND WEST LAKE HOUSTON PARKWAY.
ELEVATION = 53.67 FEET NAVD 88 (2001 ADJUSTMENT)

100-YEAR FLOOD PLAIN
ACCORDING TO MAP No. 48201C0510L OF THE FEDERAL EMERGENCY MANAGEMENT AGENCY'S (FEMA) FLOOD INSURANCE RATE MAP (FIRM) FOR HARRIS COUNTY, TEXAS AND INCORPORATED AREAS, DATED JUNE 18, 2007, THE SUBJECT TRACT IS SITUATED WITHIN UNSHADED ZONE "X"; DEFINED AS AREAS DETERMINED TO BE OUTSIDE THE 0.2% ANNUAL CHANCE FLOODPLAIN (500-YEAR FLOOD).

NOTICE:
FOR YOUR SAFETY, YOU ARE REQUIRED BY TEXAS LAW TO CALL 811 AT LEAST 48 HOURS BEFORE YOU DIG SO THAT UNDERGROUND LINES CAN BE MARKED. THIS SIGNATURE DOES NOT FULFILL YOUR OBLIGATION TO CALL 811

VERIFICATION OF PRIVATE UTILITY LINES

Date:

CenterPoint Energy natural gas utilities shown.
(Gas services lines are not shown). This signature not to be used for conflict verification.
Signature Valid for six months.

Date:

CenterPoint Energy / UNDERGROUND Electrical Facilities Verification ONLY.
(This Signature verifies existing underground facilities - not to be used for conflict verification.)
Signature Valid for six months.

Date:

Approved for AT&T Texas / SWBT underground conduit facilities only.
Signature valid for one year.

Date:

QUIDDITY
Texas Board of Professional Engineers and Land Surveyors Reg. No. F-23290
6330 West Loop South, Suite 150 • Bellaire, TX 77401 • 713.777.5337

JOB NO: 00050-0099-01 DATE: 1/19/2026

APPROVED BY:
DATE: MAY 2026
DESIGNED BY: JK
DRAWN BY: JLG
SURVEYED BY:
FB NO. XXXXXX

INTERIM REVIEW
Not intended for construction, bidding or permit purposes.
Engineer: LAUREN J. MUDD, P.E.
P.E. Serial No.: 153971
Date: MAY 2026

CITY OF HOUSTON
HOUSTON PUBLIC WORKS

SCOTT STREET NO. 1 LIFT STATION REHABILITATION

CIVIL

SITE DRAINAGE PLAN

WBS NUMBER	FOR CITY OF HOUSTON USE ONLY
R-000267-127A-4	
DRAWING SCALE	
AS NOTED	
CITY OF HOUSTON PM	
TAHA LOTIA	
DWG NO. 0-C-19	
SHEET NO. 27 OF 220	

K:\00050\00050-0099-01 Scott St. No. 1 Lift Station Rehabilitation - Phase II Design\2 Design Phase\CAD\SITE\Plans\00050-0099-01 CIVIL SHEETS.dwg

0 1 2 3 4 5 ORIGINAL SCALE IN INCHES FOR REDUCED PLANS

NO.	DATE	REVISIONS	APP.

											2 YR	100 YR												2 YR							100 YEAR						
						Intensity (in/hr)																														
						2 yr		100 yr																												
Manhole From	Manhole To	Contributing Area (Acres)	Total Area (Acres)	Runoff Coefficient C	Sum of C*A	b	48.35	b	60.66	2 yr	100 yr		Time of Concentration (mins)	Pipe Length (ft)	Pipe Diameter or Rise (in) ORIGINAL	Box Span (in)	Slope (%)	Mannings "n"	Design Capacity (cfs)	Design Velocity (ft/sec)	Fall (feet)	Manhole Drop (feet)	Flowline Elevation Upstream (feet)	Flowline Elevation Downstream (feet)	Actual Velocity (ft/sec)	Hydraulic Gradient (%)	Change in Head (feet)	Elevation of Hyd. Grad. Upstream (feet)	Elevation of Hyd. Grad. Downstream (feet)	Top of Grate	HGL ABOVE / BELOW TOP OF BANK	Actual Velocity (ft/sec)	Hydraulic Gradient (%)	Change in Head (feet)	Elevation of Hyd. Grad. Upstream (feet)	Elevation of Hyd. Grad. Downstream (feet)	Top of Grate	HGL ABOVE/ BELOW TOP OF BANK
						d	9.07	d	4.44																											
						e	0.7244	e	0.5797																											
Scott St. Lift Station No. 1 Rehab																																				
"A"-Inlet 1	Underground Detention	0.38	0.38	0.80	0.3		3.88		8.81	1.18	2.68		23.43	53	12		0.38	0.012	2.38	3.03	0.20		35.45	35.25	1.50	0.09	0.05	36.45	36.25	39.80	-3.35	3.41	0.48	0.26	37.80	37.54	39.80	-2.00
													0.29																								
"A"-Inlet 3*	JB-14-2	0.12	0.12	0.23	0.0		4.02		9.11	0.11	0.25		21.88	50	12		0.38	0.012	2.38	3.03	0.19		35.80	35.61	0.14	0.00	0.00	36.80	36.61	38.80	-2.00	0.32	0.00	0.00	37.55	37.54	38.80	-1.25
													0.28																								
"A"-Inlet 4*	JB-14-2	0.07	0.07	0.37	0.0		4.08		9.24	0.11	0.24		21.25	25	12		0.38	0.012	2.38	3.03	0.10		35.70	35.61	0.13	0.00	0.00	36.70	36.61	38.80	-2.10	0.30	0.00	0.00	37.55	37.54	38.80	-1.25
													0.14																								
JB-14-2	Underground Detention	0.00	0.19	0.28	0.1		4.83		10.86	0.26	0.58		15.00	19	12		0.38	0.012	2.38	3.03	0.07		35.61	35.53	0.33	0.00	0.00	36.61	36.25	40.88	-4.28	0.74	0.02	0.00	37.54	37.54	40.88	-3.34
													0.10																								
Underground Detention	JB-14-1 w/ Restrictor	0.33	0.83	0.69	0.6		3.86		8.76	2.21	5.02		23.72	22	12		0.38	0.012	2.38	3.03	0.08		35.25	35.17	2.82	0.33	0.07	36.25	36.17	39.75	-3.50	6.40	1.69	0.37	37.54	37.17	39.75	-2.21
													0.12																								

*: Indicates calculated "c" value from impervious area ratio using equation outlined in COH DM 9.2.01.B3.(2)

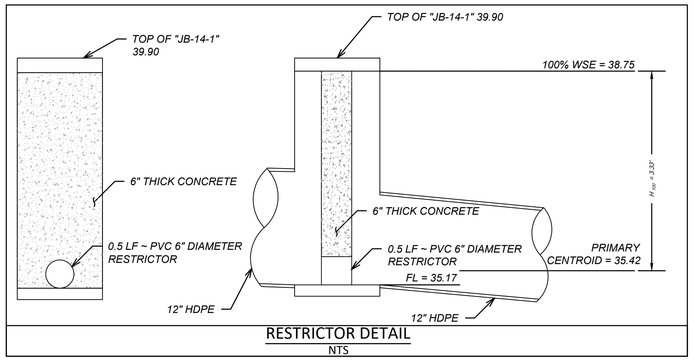

RESTRICTOR DETAIL
NTS

Scott Street No. 1 Lift Station Rehab
Service Area ***0.95 ac***

Low Level

25% Basin Depth Elevation = 36.13 ft

H25% =36.13-35.42 = 0.70 ft

Q25%(allowable) Primary = (Per HCED UPIN No. 19101MF14P01) = 0.48 cfs

$D_{(req.)\ Primary} = Q_{25}^{0.5} / (2.25h^{0.25})$ = 0.33 ft = 4.01 in

Use minimum required 6" Diameter Primary Restrictor.

Q25% = CA(2G)^0.5(H25)^0.5 = (0.8)(0.2)(2*32.2)^0.5(0.7)^0.5 = 1.06 cfs

High Level

H100%(Primary) = 38.75 - 35.42 = 3.33 ft

Q100%(allowable) = 0.95 (2.0 cfs/Ac) = 1.90 cfs

Q100%(P) = CA(2G)^0.5(H100%(Primary))^0.5 = (0.8)(0.2)(2*32.2)^0.5(3.33)^0.5 = 2.30 cfs

Q100%(Secondary Allowable) = Q100%(Allowable) - Q100%(Primary) = 1.9 - 2.3 = -0.40 cfs

Secondary Restrictor Not Required

Q(total) = 2.30 cfs

RESTRICTOR NOTE:
THE SERVICE AREA USED FOR SIZING THE PROPOSED RESTRICTOR IS BASED ON THE AREA LOCATED WITHIN THE SITE FENCE LIMITS.

NOTICE:
FOR YOUR SAFETY, YOU ARE REQUIRED BY TEXAS LAW TO CALL 811 AT LEAST 48 HOURS BEFORE YOU DIG SO THAT UNDERGROUND LINES CAN BE MARKED. THIS SIGNATURE DOES NOT FULFILL YOUR OBLIGATION TO CALL 811

VERIFICATION OF PRIVATE UTILITY LINES

Date:

CenterPoint Energy natural gas utilities shown.
(Gas services lines are not shown). This signature not to be used for conflict verification.

Signature Valid for six months.

Date:

CenterPoint Energy / UNDERGROUND Electrical Facilities Verification ONLY.
(This Signature verifies existing underground facilities - not to be used for conflict verification.)

Signature Valid for six months.

Date:

Approved for AT&T Texas / SWBT underground conduit facilities only.
Signature valid for one year.

QUIDDITY
Texas Board of Professional Engineers and Land Surveyors Reg. No. F-23290
6330 West Loop South, Suite 150 • Bellaire, TX 77401 • 713.777.5337

JOB NO: 00050-0099-01 DATE: 1/19/2026

APPROVED BY:

DATE: MAY 2026

DESIGNED BY: JK

DRAWN BY: JLG

SURVEYED BY:

FB NO. XXXXXX

INTERIM REVIEW
Not intended for construction, bidding or permit purposes.
Engineer: LAUREN J. MUDD, P.E.
P.E. Serial No.: 153971
Date: MAY 2026

CITY OF HOUSTON
HOUSTON PUBLIC WORKS

SCOTT STREET NO. 1
LIFT STATION REHABILITATION
CIVIL

SITE DRAINAGE CALCULATIONS

WBS NUMBER	FOR CITY OF HOUSTON USE ONLY
R-000267-127A-4	
DRAWING SCALE	
AS NOTED	
CITY OF HOUSTON PM	
TAHA LOTIA	
DWG NO. **0-C-20**	
SHEET NO. 28 OF 220	

K:\00050\00050-0099-01 Scott St. No. 1 Lift Station Rehabilitation - Phase II Design\2 Design Phase\CAD\SITE\Plans\00050-0099-01 CIVIL SHEETS.dwg

0 1 2 3 4 5 ORIGINAL SCALE IN INCHES FOR REDUCED PLANS

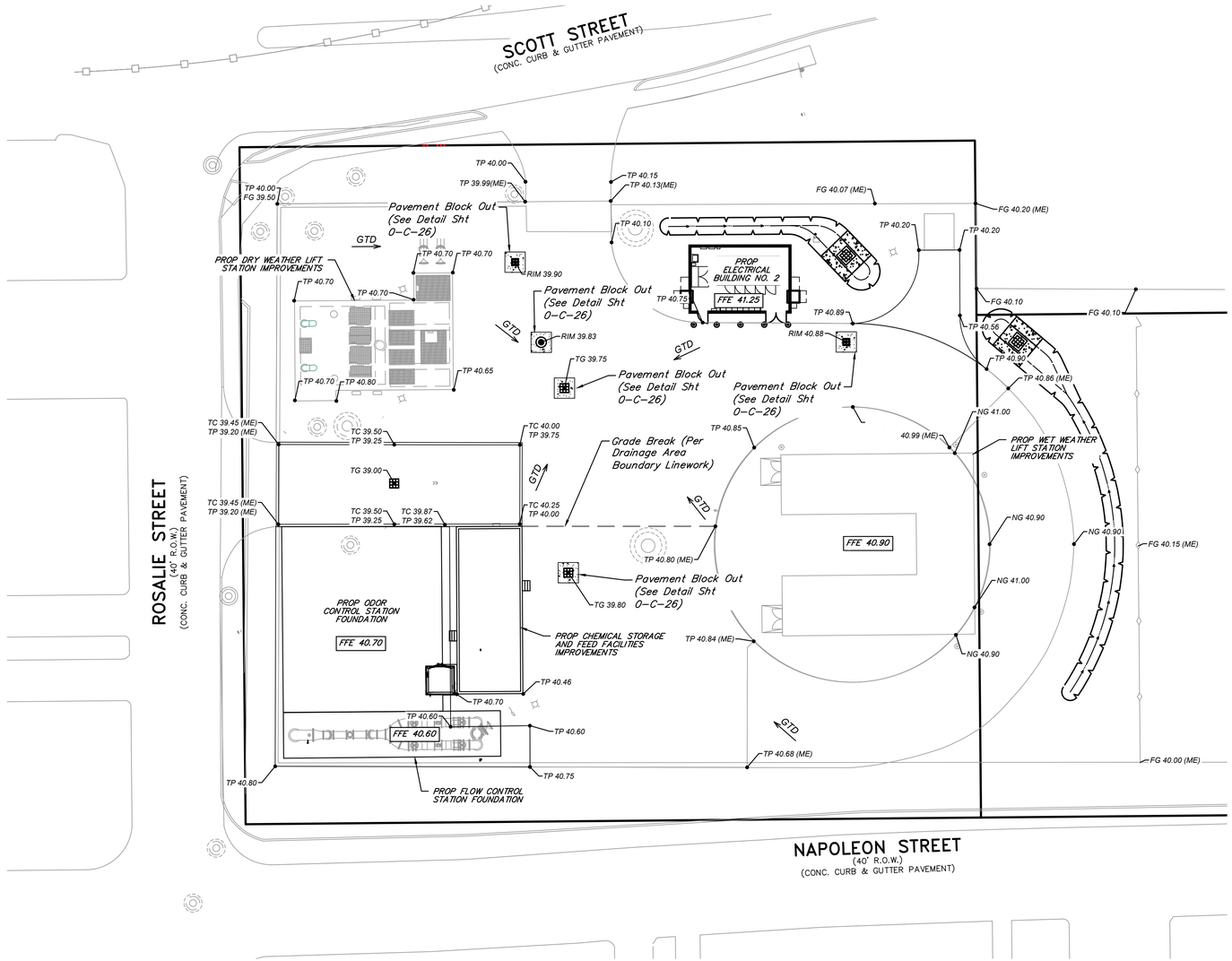

LEGEND

	PROPOSED TOP OF BANK
	STORM SEWER w/ "E" INLET
	SWALE CENTERLINE
ME	MATCH EXISTING
TP 250.50	PROPOSED TOP OF PAVEMENT ELEVATION
TC 250.50	PROPOSED TOP OF CURB ELEVATION
FG 250.50	PROPOSED FINISHED GRADE ELEVATION
FL 250.50	PROPOSED FLOWLINE ELEVATION
NG 250.50	EXISTING NATURAL GROUND ELEVATION
FFE XX.XX	PROPOSED FINISHED FLOOR ELEVATION
	PROPERTY LINE
	PROPOSED FENCE
GTD	GRADE TO DRAIN

NOTES:

1. THE ATLAS 14 500-YEAR BASE FLOOD ELEVATION IS 37.50' PER FEMA FIS REPORT NO. 48201CV004C EFFECTIVE MAY 2, 2019.
2. MINIMUM FINISHED FLOOR FOR SCOTT STREET NO. 1 LIFT STATION REHABILITATION IS 40.50'.

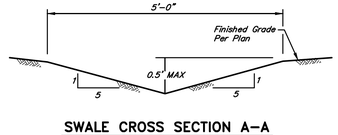

SWALE CROSS SECTION A-A
NOT TO SCALE

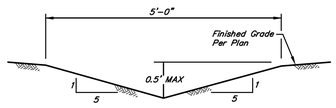

SWALE CROSS SECTION B-B
NOT TO SCALE

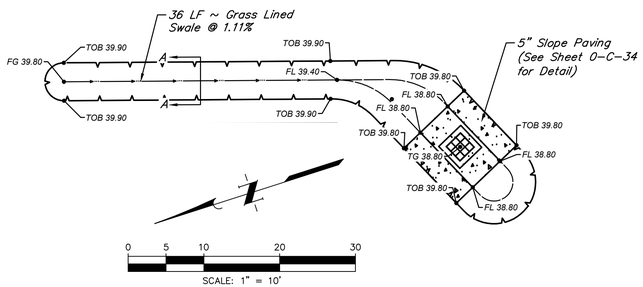

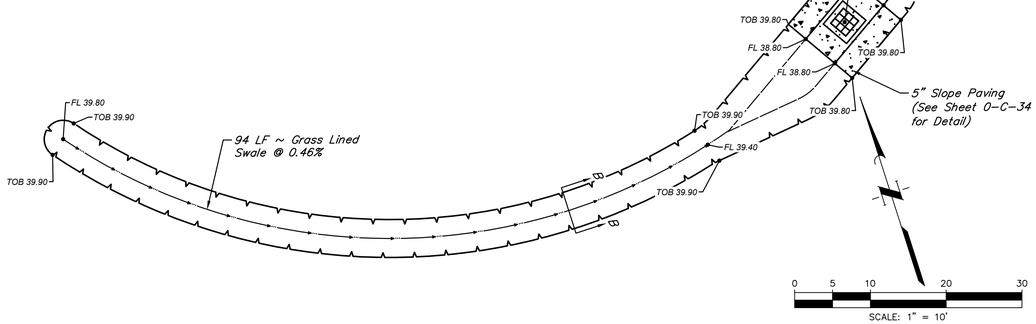

NO.	DATE	REVISIONS	APP.

0 5 10 20 40 60
SCALE: 1" = 20'

BENCH MARK
A BRASS DISC STAMPED "RM 070215" LOCATED AT THE END OF YAUPON HOLLY LANE AT ITS INTERSECTION WITH EASTERN REDBUD LANE, ON TOP OF A "B-B" INLET AT THE NORTHWEST CORNER OF THE INTERSECTION.
ELEVATION = 64.76 FEET NAVD 88 (2001 ADJUSTMENT)

T.B.M. "A"
A CHISELED SQUARE ON THE BULL NOSE OF THE ESPLANADE LOCATED ON WEST LAKE HOUSTON PARKWAY APPROXIMATELY 970 FEET NORTH OF THE CENTERLINE INTERSECTION OF SUMMER LAKE RANCH DRIVE AND WEST LAKE HOUSTON PARKWAY.
ELEVATION = 55.34 FEET NAVD 88 (2001 ADJUSTMENT)

T.B.M. "B"
A CHISELED SQUARE ON TOP OF A "B-B" INLET AT THE SOUTHWEST CORNER OF THE INTERSECTION OF SUMMER LAKE RANCH DRIVE AND WEST LAKE HOUSTON PARKWAY.
ELEVATION = 53.67 FEET NAVD 88 (2001 ADJUSTMENT)

100-YEAR FLOOD PLAIN
ACCORDING TO MAP No. 48201C0510L OF THE FEDERAL EMERGENCY MANAGEMENT AGENCY'S (FEMA) FLOOD INSURANCE RATE MAP (FIRM) FOR HARRIS COUNTY, TEXAS AND INCORPORATED AREAS, DATED JUNE 18, 2007, THE SUBJECT TRACT IS SITUATED WITHIN UNSHADED ZONE "X"; DEFINED AS AREAS DETERMINED TO BE OUTSIDE THE 0.2% ANNUAL CHANCE FLOODPLAIN (500-YEAR FLOOD).

NOTICE:
FOR YOUR SAFETY, YOU ARE REQUIRED BY TEXAS LAW TO CALL 811 AT LEAST 48 HOURS BEFORE YOU DIG SO THAT UNDERGROUND LINES CAN BE MARKED. THIS SIGNATURE DOES NOT FULFILL YOUR OBLIGATION TO CALL 811

VERIFICATION OF PRIVATE UTILITY LINES

Date:
CenterPoint Energy natural gas utilities shown.
(Gas services lines are not shown). This signature not to be used for conflict verification.
Signature Valid for six months.

Date:
CenterPoint Energy / UNDERGROUND Electrical Facilities Verification ONLY.
(This Signature verifies existing underground facilities - not to be used for conflict verification.)
Signature Valid for six months.

Date:
Approved for AT&T Texas / SWBT underground conduit facilities only.
Signature valid for one year.

QUIDDITY
Texas Board of Professional Engineers and Land Surveyors Reg. No. F-23290
6330 West Loop South, Suite 150 • Bellaire, TX 77401 • 713.777.5337

JOB NO: 00050-0099-01 DATE: 1/19/2026

APPROVED BY:
DATE: MAY 2026
DESIGNED BY: JK
DRAWN BY: JLG
SURVEYED BY:
FB NO. XXXXXX

INTERIM REVIEW
Not intended for construction, bidding or permit purposes.
Engineer: LAUREN J. MUDD, P.E.
P.E. Serial No.: 153971
Date: MAY 2026

CITY OF HOUSTON
HOUSTON PUBLIC WORKS

SCOTT STREET NO. 1 LIFT STATION REHABILITATION
CIVIL

SITE GRADING PLAN

WBS NUMBER	FOR CITY OF HOUSTON USE ONLY
R-000267-127A-4	
DRAWING SCALE	
AS NOTED	
CITY OF HOUSTON PM	
TAHA LOTIA	
DWG NO. **0-C-21**	
SHEET NO. 29 OF 220	

K:\00050\00050-0099-01 Scott St. No. 1 Lift Station Rehabilitation - Phase II Design\2 Design Phase\CAD\SITE\Plans\00050-0099-01 CIVIL SHEETS.dwg

0 1 2 3 4 5 ORIGINAL SCALE IN INCHES FOR REDUCED PLANS

NO.	DATE	REVISIONS	APP.

DocuSign Envelope ID: CB71C116-B716-4899-A5EE-0D2F2CC55AF6

DISCLAIMER:
THE USE OF THIS STANDARD IS GOVERNED BY THE TEXAS ENGINEERING PRACTICE ACT. THE DESIGN REQUIREMENTS ON THIS STANDARD DO NOT PURPORT TO ADDRESS ALL OF THE SAFETY CONCERNS ASSOCIATED WITH THEIR USE. IT IS THE RESPONSIBILITY OF THE DESIGN ENGINEER ADOPTING THIS STANDARD DRAWING FOR USE ON A SPECIFIC PROJECT TO DETERMINE THE APPLICABILITY OF ANY INFORMATION CONTAINED HEREIN AND TO CONDUCT AT THE JOB SITE SAFETY AND HEALTH PROGRAMS AND SUPERVISION OF ALL OPERATIONS. FURTHERMORE, THE DESIGN ENGINEER ADOPTING THIS STANDARD DRAWING FOR USE ON A SPECIFIC PROJECT ASSUMES RESPONSIBILITY FOR INCORRECT DESIGNS RESULTING FROM ITS USE. THE CITY OF HOUSTON MAKES NO REPRESENTATIONS OR WARRANTY OF ANY KIND WHATSOEVER WITH RESPECT TO THE ACCURACY OR SUITABILITY OF THIS STANDARD DRAWING FOR ANY PURPOSES WHATSOEVER. THE CITY OF HOUSTON ASSUMES NO RESPONSIBILITY FOR INCORRECT RESULTS OR DAMAGES RESULTING FROM ITS USE.

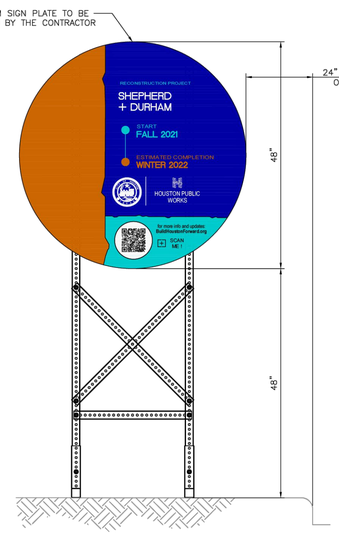

FRONT VIEW

PROJECT SIGN – 48"

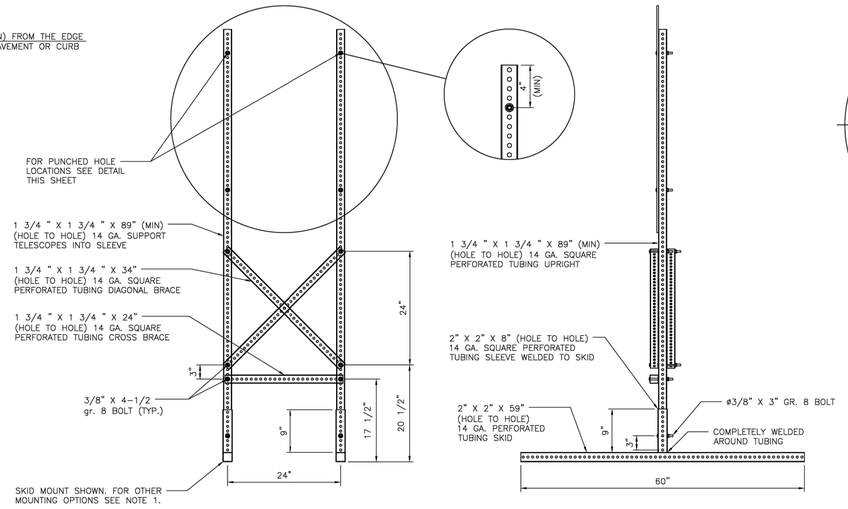

FRONT VIEW

SIDE VIEW

SKID MOUNTED SUPPORTS FOR 48" PROJECT SIGN

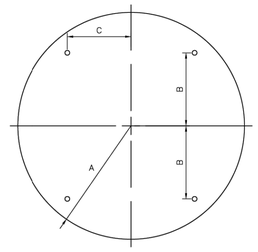

CIRCLE

A	B	C	T
24"	15"	12"	0.080"

48" SIGN PLATE HOLE DETAIL

NOTES:

1. ALLOWABLE POST INSTALLATION METHODS ARE: CONCRETE FOOTING, SURFACE MOUNTING, SKID MOUNTING AND PILE DRIVEN POSTS.
2. FOR POST INSTALLATION WITH CONCRETE FOOTING, REFER TO DETAIL 01554-01.
3. FOR SURFACE MOUNTED POST INSTALLATION, REFER TO DETAIL 01554-02.
4. FOR SKID MOUNTING REQUIREMENTS REFER TO SPECIFICATION 01582.
5. PILE DRIVEN POSTS MUST BE DRIVEN TO A MINIMUM DEPTH OF 4-FEET INTO EXISTING GROUND.
6. LAYOUT, TEXT SIZE, AND OVERALL DESIGN OF THE SIGN WILL BE THE RESPONSIBILITY OF THE BUILD HOUSTON COORDINATOR.
7. ALL SIGN POSTS, SIGN TUBING, AND SIGN FASTENERS SHALL BE GALVANIZED STEEL PER SPECIFICATION 01582.

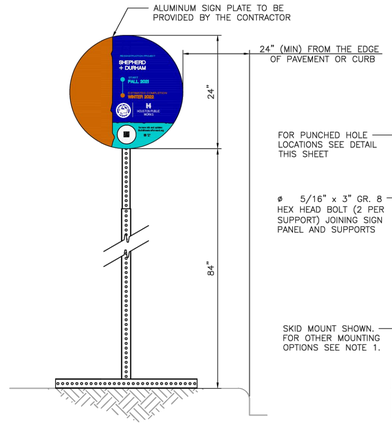

FRONT VIEW

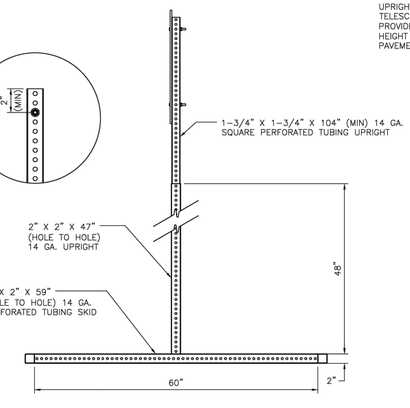

SIDE VIEW

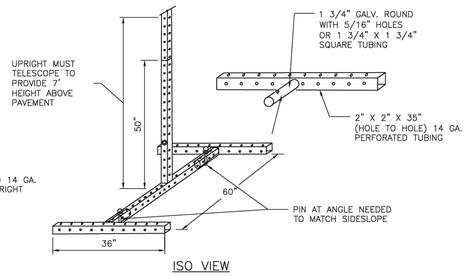

ISO VIEW

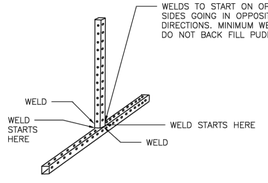

ISO VIEW

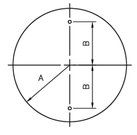

A	B	C
12"	8"	0.080"

24" SIGN PLATE HOLE DETAIL

SKID MOUNTED SUPPORTS FOR 24" PROJECT SIGN

APPROVED BY:	APPROVED BY:
DocuSigned by: Suhail Kanuvar	DocuSigned by: Carl Haddock
CITY ENGINEER	DIRECTOR OF HOUSTON PUBLIC WORKS
EFF DATE: NOV-27-2023	DWG NO: 01582-01

CITY OF HOUSTON
HOUSTON PUBLIC WORKS STANDARD

CONSTRUCTION SIGN BUILD HOUSTON FORWARD

DRAWING SCALE
NOT TO SCALE

FOR CITY OF HOUSTON USE ONLY

QUIDDITY
Texas Board of Professional Engineers and Land Surveyors Reg. No. F-23290
6330 West Loop South, Suite 150 • Bellaire, TX 77401 • 713.777.5337

JOB NO: 00050-0099-01 DATE: 1/19/2026

APPROVED BY:

DATE: MAY 2026

DESIGNED BY: MBMITCHELL

DRAWN BY: JMMUSSO

SURVEYED BY:

FB NO. XXXXX

INTERIM REVIEW
Not intended for construction, bidding or permit purposes.
Engineer: HARRY W. ISENSEE III, P.E.
P.E. Serial No.: 144401
Date: MAY 2026

CITY OF HOUSTON
HOUSTON PUBLIC WORKS

SCOTT STREET NO. 1
LIFT STATION REHABILITATION
CIVIL

CIVIL DETAILS
SHEET 1 OF 16

WBS NUMBER	FOR CITY OF HOUSTON USE ONLY
R-000267-127A-4	
DRAWING SCALE	
AS NOTED	
CITY OF HOUSTON PM	
TAHA LOTIA	
DWG NO. 0-C-22	
SHEET NO. 30 OF 220	

0 1 2 3 4 5

ORIGINAL SCALE IN INCHES FOR REDUCED PLANS

NO.	DATE	REVISIONS	APP.

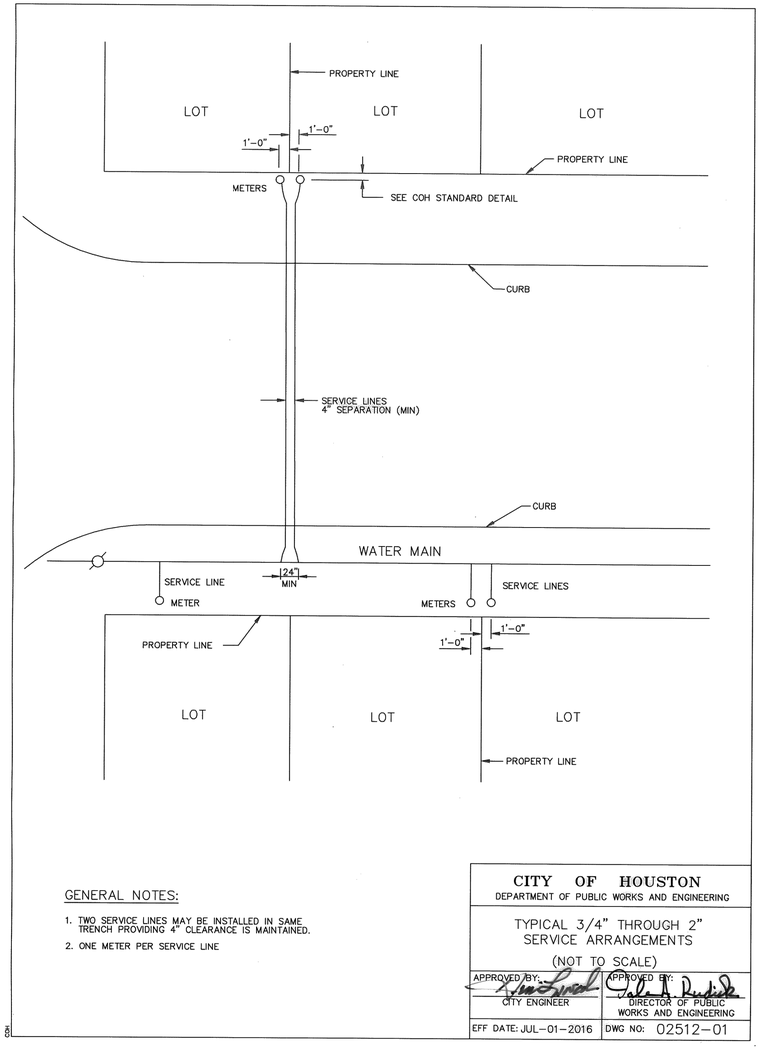

GENERAL NOTES:

1. TWO SERVICE LINES MAY BE INSTALLED IN SAME TRENCH PROVIDING 4" CLEARANCE IS MAINTAINED.
2. ONE METER PER SERVICE LINE

CITY OF HOUSTON DEPARTMENT OF PUBLIC WORKS AND ENGINEERING	
TYPICAL 3/4" THROUGH 2" SERVICE ARRANGEMENTS (NOT TO SCALE)	
APPROVED BY: CITY ENGINEER	APPROVED BY: DIRECTOR OF PUBLIC WORKS AND ENGINEERING
EFF DATE: JUL-01-2016	DWG NO: 02512-01

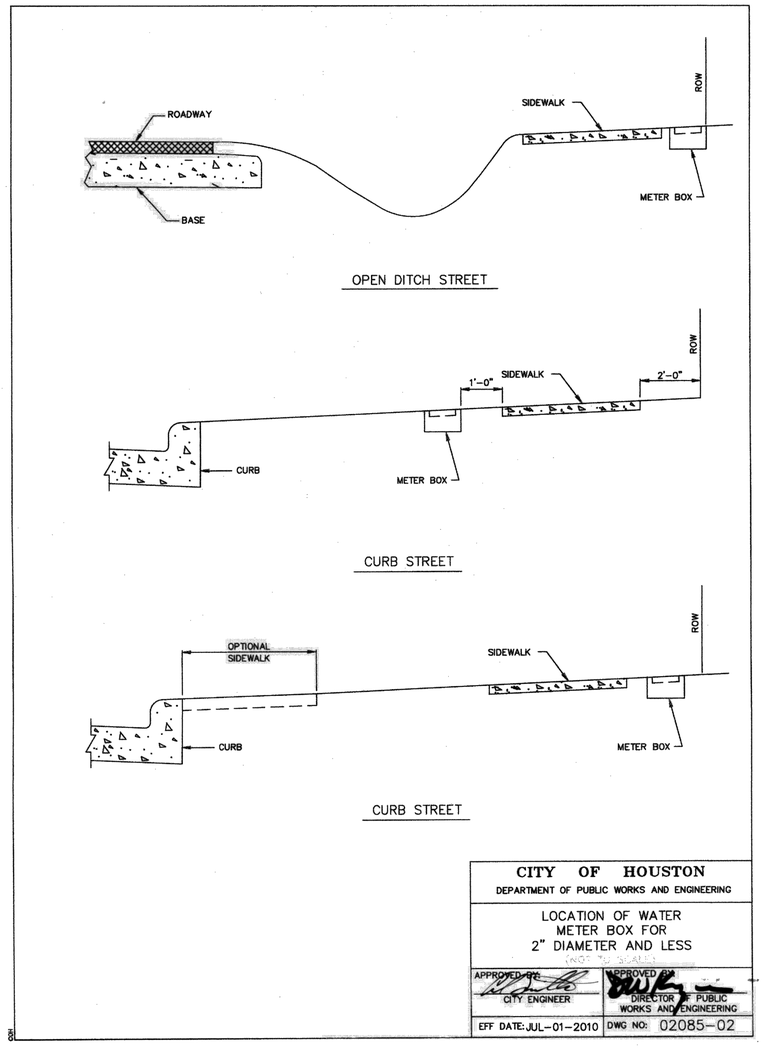

OPEN DITCH STREET

CURB STREET

CURB STREET

CITY OF HOUSTON DEPARTMENT OF PUBLIC WORKS AND ENGINEERING	
LOCATION OF WATER METER BOX FOR 2" DIAMETER AND LESS (NOT TO SCALE)	
APPROVED BY: CITY ENGINEER	APPROVED BY: DIRECTOR OF PUBLIC WORKS AND ENGINEERING
EFF DATE: JUL-01-2010	DWG NO: 02085-02

QUIDDITY

Texas Board of Professional Engineers and Land Surveyors Reg. No. F-23290
6330 West Loop South, Suite 150 • Bellaire, TX 77401 • 713.777.5337

JOB NO: 00050-0099-01 DATE: 1/19/2026

APPROVED BY:

DATE: MAY 2026

DESIGNED BY: MBMITCHELL

DRAWN BY: JMMUSSO

SURVEYED BY:

FB NO. XXXXXX

INTERIM REVIEW
Not intended for construction, bidding or permit purposes.
Engineer: HARRY W. ISENSEE III, P.E.
P.E. Serial No.: 144401
Date: MAY 2026

CITY OF HOUSTON
HOUSTON PUBLIC WORKS

SCOTT STREET NO. 1
LIFT STATION REHABILITATION
CIVIL

CIVIL DETAILS
SHEET 2 OF 16

WBS NUMBER	FOR CITY OF HOUSTON USE ONLY
R-000267-127A-4	
DRAWING SCALE	
AS NOTED	
CITY OF HOUSTON PM	
TAHA LOTIA	
DWG NO. O-C-23	
SHEET NO. 31 OF 220	

K:\00050\00050-0099-01 Scott St. No. 1 Lift Station Rehabilitation - Phase II Design\2 Design Phase\CAD\MISCD-2.dwg

ORIGINAL SCALE IN INCHES FOR REDUCED PLANS

NO.	DATE	REVISIONS	APP.

NOTES:

1 1/2" METER SET IS SAME AS 2" EXCEPT WHEEL VALVE IS NOT REQUIRED.

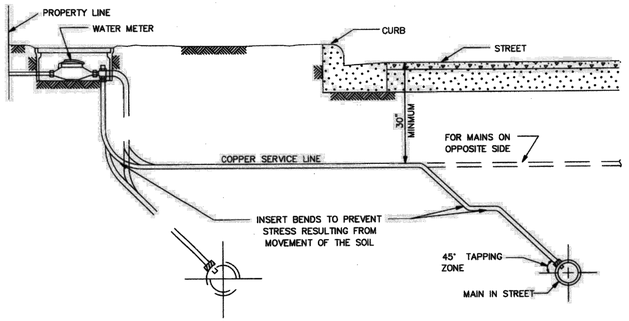

TYPICAL SECTION SERVICE LINE

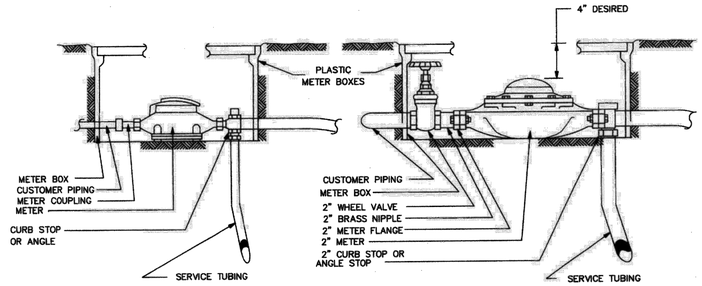

5/8", 3/4" AND 1" METER SET

2" METER SET

CITY OF HOUSTON DEPARTMENT OF PUBLIC WORKS AND ENGINEERING	
TYPICAL METER SETTINGS (NOT TO SCALE)	
APPROVED BY: CITY ENGINEER	APPROVED BY: DIRECTOR OF PUBLIC WORKS AND ENGINEERING
EFF DATE: JULY-01-2010	DWG NO: 02526-01

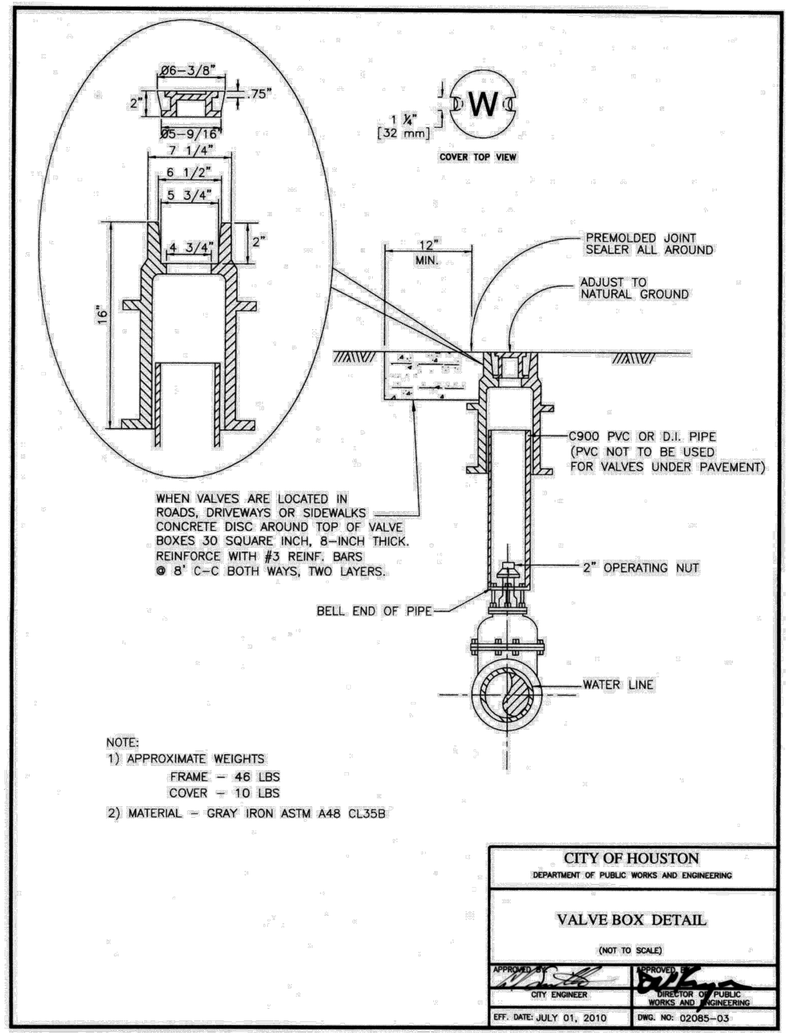

NOTE:
1) APPROXIMATE WEIGHTS
FRAME – 46 LBS
COVER – 10 LBS
2) MATERIAL – GRAY IRON ASTM A48 CL35B

CITY OF HOUSTON DEPARTMENT OF PUBLIC WORKS AND ENGINEERING	
VALVE BOX DETAIL (NOT TO SCALE)	
APPROVED BY: CITY ENGINEER	APPROVED BY: DIRECTOR OF PUBLIC WORKS AND ENGINEERING
EFF. DATE: JULY 01, 2010	DWG. NO: 02085-03

QUIDDITY
Texas Board of Professional Engineers and Land Surveyors Reg. No. F-23290
6330 West Loop South, Suite 150 • Bellaire, TX 77401 • 713.777.5337

JOB NO: 00050-0099-01 DATE: 1/19/2026

APPROVED BY:

DATE: MAY 2026

DESIGNED BY: MBMITCHELL

DRAWN BY: JMMUSSO

SURVEYED BY:

FB NO. XXXXXX

INTERIM REVIEW
Not intended for construction, bidding or permit purposes.
Engineer: HARRY W. ISENSEE III, P.E.
P.E. Serial No.: 144401
Date: MAY 2026

CITY OF HOUSTON
HOUSTON PUBLIC WORKS

SCOTT STREET NO. 1 LIFT STATION REHABILITATION

CIVIL

CIVIL DETAILS SHEET 3 OF 16

WBS NUMBER	FOR CITY OF HOUSTON USE ONLY
R-000267-127A-4	
DRAWING SCALE	
AS NOTED	
CITY OF HOUSTON PM	
TAHA LOTIA	
DWG NO. O-C-24	
SHEET NO. 32 OF 220	

K:\00050\00050-0099-01 Scott St. No. 1 Lift Station Rehabilitation - Phase II Design\2 Design Phase\CAD\MISCD-2.dwg

ORIGINAL SCALE IN INCHES FOR REDUCED PLANS

NO.	DATE	REVISIONS	APP.

PIPE TAPPING SCHEDULE

WATER MAIN TYPE AND DIAMETER	SERVICE SIZE			
	3/4"	1"	1 1/2"	2"
4" CAST IRON OR DUCTILE IRON	DSS, WBSS	DSS, WBSS	DSS, WBSS	DSS, WBSS
4" ASBESTOS (EXISTING) CEMENT	WBSS	WBSS	DSS, WBSS	DSS, WBSS
4" PVC (AWWA C900)	DSS, WBSS	DSS, WBSS	DSS, WBSS	DSS, WBSS
6" AND 8" CAST IRON OR DUCTILE IRON	DSS, WBSS	DSS, WBSS	DSS, WBSS	DSS, WBSS
6" AND 8" ASBESTOS (EXISTING) CEMENT	DSS, WBSS	DSS, WBSS	DSS, WBSS	DSS, WBSS
6" AND 8" CAST IRON OR DUCTILE IRON	DSS, WBSS	DSS, WBSS	DSS, WBSS	DSS, WBSS
6" AND 8" PVC (AWWA C900)	DSS, WBSS	DSS, WBSS	DSS, WBSS	DSS, WBSS
12" CAST IRON OR DUCTILE IRON	DSS, WBSS	DSS, WBSS	DSS, WBSS	DSS, WBSS
12" ASBESTOS (EXISTING) CEMENT	DSS, WBSS	DSS, WBSS	DSS, WBSS	DSS, WBSS
12" PVC (AWWA C900)	DSS, WBSS	DSS, WBSS	DSS, WBSS	DSS, WBSS
16" AND UP CAST IRON OR DUCTILE IRON	DWBSS	DWBSS	DWBSS	DWBSS
16" AND UP ASBESTOS (EXISTING) CEMENT	DWBSS	DWBSS	DWBSS	DWBSS
16" AND UP PVC (AWWA C900)	DWBSS	DWBSS	DWBSS	DWBSS

DSS – DUAL STRAP SADDLES
WBSS – WIDE BAND STRAP SADDLES
DWBSS – DUAL WIDE BAND STRAP SADDLES

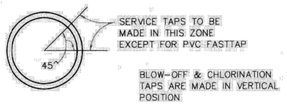

SERVICE TAPS TO BE MADE IN THIS ZONE EXCEPT FOR PVC FASTTAP

BLOW-OFF & CHLORINATION TAPS ARE MADE IN VERTICAL POSITION.



WIDE BAND SINGLE SADDLE OR DUAL SADDLES

CITY OF HOUSTON
DEPARTMENT OF PUBLIC WORKS AND ENGINEERING

SERVICE TAPS

(NOT TO SCALE)

APPROVED: CITY ENGINEER — APPROVED: DIRECTOR OF PUBLIC WORKS AND ENGINEERING

EFF DATE: JUL-01-2010 — DWG NO: 02512-02

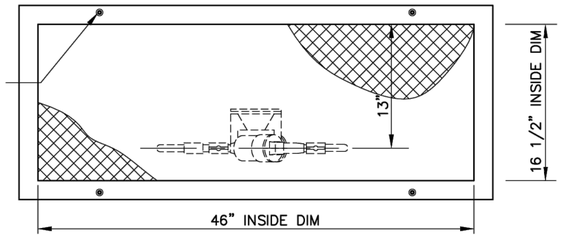

PLAN VIEW

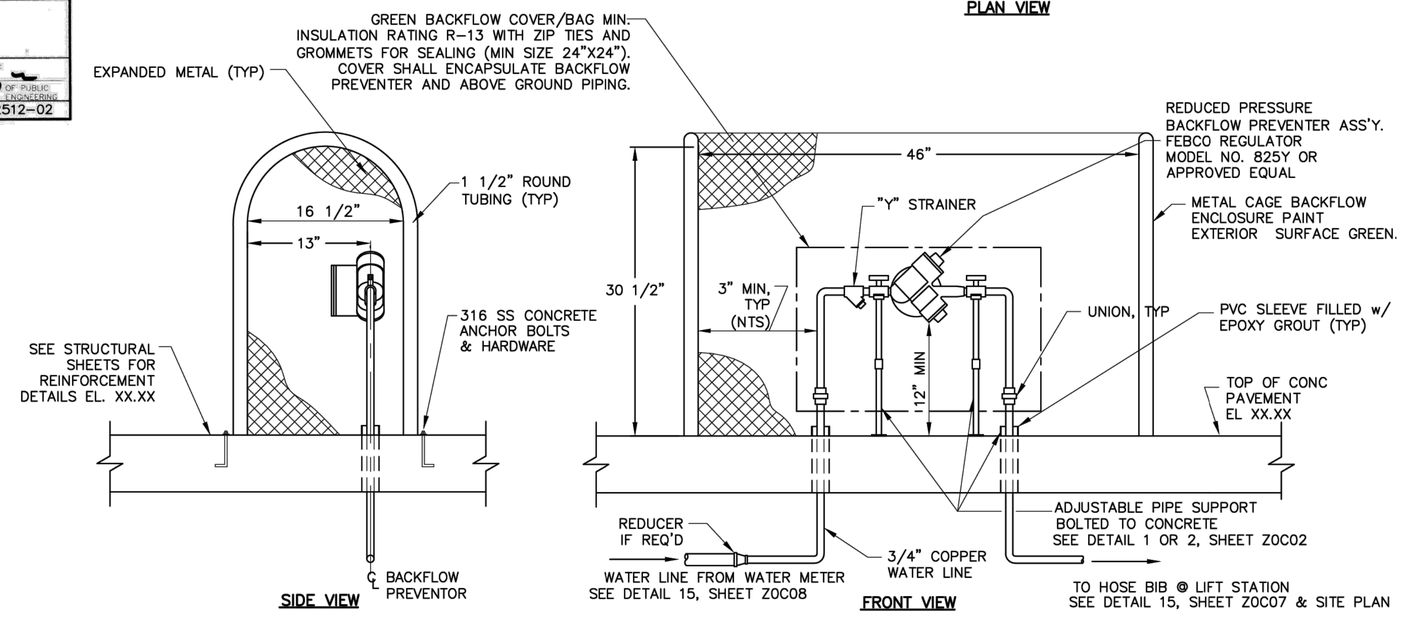

OPEN CAGE REDUCED PRESSURE BACKFLOW PREVENTER INSTALLATION

DETAIL 2 / Z0C10

QUIDDITY
Texas Board of Professional Engineers and Land Surveyors Reg. No. F-23290
6330 West Loop South, Suite 150 • Bellaire, TX 77401 • 713.777.5337

JOB NO: 00050-0099-01 DATE: 1/19/2026

APPROVED BY:

DATE: MAY 2026

DESIGNED BY: MBMITCHELL

DRAWN BY: JMMUSSO

SURVEYED BY:

FB NO. XXXXXX

INTERIM REVIEW
Not intended for construction, bidding or permit purposes.
Engineer: HARRY W. ISENSEE III, P.E.
P.E. Serial No.: 144401
Date: MAY 2026

CITY OF HOUSTON
HOUSTON PUBLIC WORKS

SCOTT STREET NO. 1
LIFT STATION REHABILITATION
CIVIL

CIVIL DETAILS
SHEET 4 OF 16

WBS NUMBER	FOR CITY OF HOUSTON USE ONLY
R-000267-127A-4	
DRAWING SCALE	
AS NOTED	
CITY OF HOUSTON PM	
TAHA LOTIA	
DWG NO. O-C-25	
SHEET NO. 33 OF 220	

K:\00050\00050-0099-01 Scott St. No. 1 Lift Station Rehabilitation - Phase II Design\2 Design Phase\CAD\MISC\D-2.dwg

ORIGINAL SCALE IN INCHES FOR REDUCED PLANS

NO.	DATE	REVISIONS	APP.

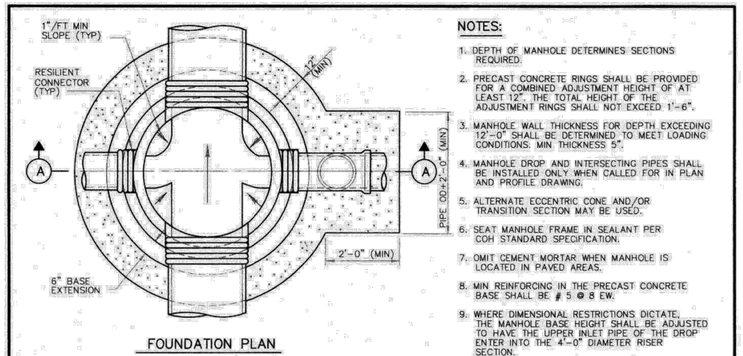

FOUNDATION PLAN

NOTES:

1. DEPTH OF MANHOLE DETERMINES SECTIONS REQUIRED.
2. PRECAST CONCRETE RINGS SHALL BE PROVIDED FOR A COMBINED ADJUSTMENT HEIGHT OF AT LEAST 12". THE TOTAL HEIGHT OF THE ADJUSTMENT RINGS SHALL NOT EXCEED 1'-6".
3. MANHOLE WALL THICKNESS FOR DEPTH EXCEEDING 12'-0" SHALL BE DETERMINED TO MEET LOADING CONDITIONS. MIN. THICKNESS 5".
4. MANHOLE DROP AND INTERSECTING PIPES SHALL BE INSTALLED ONLY WHEN CALLED FOR IN PLAN AND PROFILE DRAWING.
5. ALTERNATE ECCENTRIC CONE AND/OR TRANSITION SECTION MAY BE USED.
6. SEAT MANHOLE FRAME IN SEALANT PER COH STANDARD SPECIFICATION.
7. OMIT CEMENT MORTAR WHEN MANHOLE IS LOCATED IN PAVED AREAS.
8. MIN REINFORCING IN THE PRECAST CONCRETE BASE SHALL BE # 5 @ 8 EW.
9. WHERE DIMENSIONAL RESTRICTIONS DICTATE, THE MANHOLE BASE HEIGHT SHALL BE ADJUSTED TO HAVE THE UPPER INLET PIPE OF THE DROP ENTER INTO THE 4'-0" DIAMETER RISER SECTION.

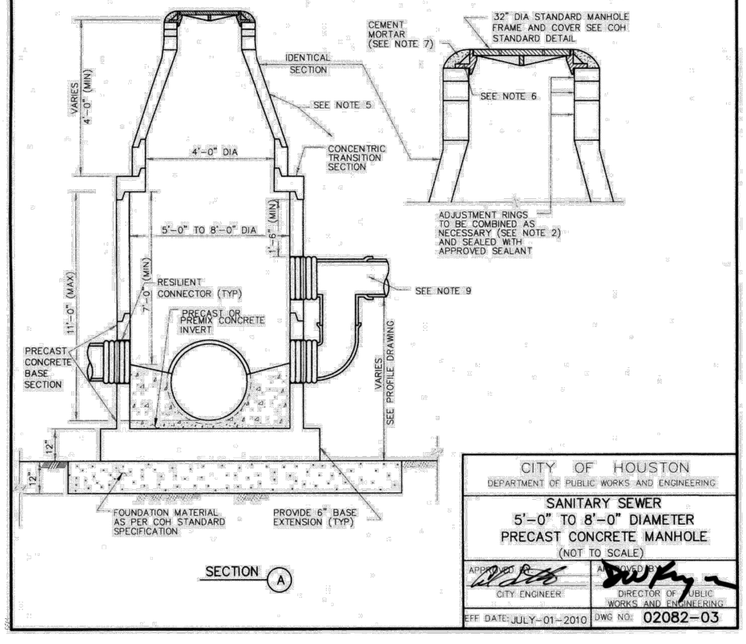

SECTION (A)

CITY OF HOUSTON
DEPARTMENT OF PUBLIC WORKS AND ENGINEERING

SANITARY SEWER
5'-0" TO 8'-0" DIAMETER
PRECAST CONCRETE MANHOLE
(NOT TO SCALE)

APPROVED BY: CITY ENGINEER	APPROVED BY: DIRECTOR OF PUBLIC WORKS AND ENGINEERING
EFF DATE: JULY-01-2010	DWG NO: 02082-03

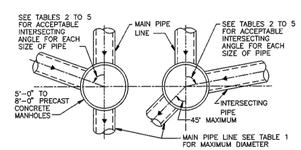

FOR MAIN PIPES FROM STRAIGHT THROUGH TO 45° DEFLECTION

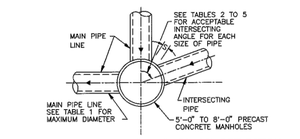

FOR MAIN PIPE WITH 45° TO 90° DEFLECTION

TABLE 1
MAXIMUM MAIN PIPE DIAMETER (I.D) IN INCHES

MANHOLE DIAMETER (FT)	STRAIGHT THROUGH TO 45° DEFLECTION	WITH 90° DEFLECTION	TABLE TO BE USED
5	36	27	2
6	42	33	3
7	48	36	4
8	60	42	5

TABLE 2
MINIMUM ANGLE AND INTERSECTING PIPE ID SIZES FOR 5'-0" DIA MANHOLE

INTERSECTING PIPE ID SIZES (INCHES)	MINIMUM INTERSECTING ANGLE IN DEGREES FOR VARIOUS MAIN PIPE ID SIZES IN INCHES											
	8"	10"	12"	15"	18"	21"	24"	27"	30"	33"	36"	
8	49	50	54	58	61	66	69	73	77	82	86	
10		53	57	61	64	68	71	76	79	84	88	
12			61	65	68	72	75	80	83	88	--	
15				68	71	75	79	83	87	--	--	
18					75	79	82	87	90	--	--	
21						83	86	90	--	--	--	
24							90	--	--	--	--	
27								--	--	--	--	
30									--	--	--	
33										--	--	
36											--	

* NOT APPLICABLE (INTERSECTING PIPE GREATER THAN MAIN PIPE)

NOTES ON USE OF STANDARD DETAIL 02082-03

TABLE 3
MINIMUM ANGLE AND INTERSECTING PIPE ID SIZES FOR 6'-0" DIA MANHOLE

INTERSECTING PIPE ID SIZES (INCHES)	MINIMUM INTERSECTING ANGLE IN DEGREES FOR VARIOUS MAIN PIPE ID SIZES IN INCHES											
	8"	10"	12"	15"	18"	21"	24"	27"	30"	33"	36"	42"
8	40	42	45	49	51	54	57	61	63	67	70	78
10		44	47	50	53	56	59	62	65	69	72	79
12			50	54	56	60	62	66	68	72	75	83
15				57	59	62	65	69	71	75	78	85
18					62	65	68	71	74	78	81	88
21						68	71	74	77	81	84	--
24							74	77	80	84	87	--
27								83	85	89	--	--
30									--	--	--	--
33										--	--	--
36											--	--
42												--

TABLE 4
MINIMUM ANGLE AND INTERSECTING PIPE ID SIZES FOR 7'-0" DIA MANHOLE

INTERSECTING PIPE ID SIZES (INCHES)	MINIMUM INTERSECTING ANGLE IN DEGREES FOR VARIOUS MAIN PIPE ID SIZES IN INCHES												
	8"	10"	12"	15"	18"	21"	24"	27"	30"	33"	36"	42"	48"
8	35	36	39	42	44	47	49	52	54	57	59	65	71
10		38	40	43	45	48	50	53	55	59	61	67	73
12			43	46	48	51	53	56	58	61	64	70	76
15				48	50	53	55	58	61	64	66	72	78
18					58	56	58	61	63	66	69	74	81
21						60	63	66	68	69	71	77	83
24						63	66	68	71	74	79	86	
27							70	72	76	78	84	90	
30								78	81	83	89	--	
33									86	88	--	--	
36										--	--	--	
42											--	--	
48												--	

TABLE 5
MINIMUM ANGLE AND INTERSECTING PIPE ID SIZES FOR 8'-0" DIA MANHOLE

INTERSECTING PIPE ID SIZES (INCHES)	MINIMUM INTERSECTING ANGLE IN DEGREES FOR VARIOUS MAIN PIPE ID SIZES IN INCHES													
	8"	10"	12"	15"	18"	21"	24"	27"	30"	33"	36"	42"	48"	54"	60"
8	30	32	34	36	38	41	43	45	47	50	52	56	61	67	74
10		33	35	38	40	42	44	46	48	51	53	58	63	68	77
12			38	40	42	44	46	49	51	53	55	60	65	71	79
15				42	44	47	48	51	53	56	58	62	67	73	81
18					46	49	51	53	55	58	56	64	70	75	83
21						51	53	55	57	60	62	67	72	77	85
24							55	57	59	62	64	69	74	79	89
27								61	63	66	68	73	78	83	--
30									67	70	72	77	82	87	--
33										74	76	81	86	--	--
36											81	86	--	--	--
42												--	--	--	--
48													--	--	--
54														--	--
60															--

NOTES TO SPECIFIER:

1. "-" INDICATES THAT A SPECIAL DESIGN OR THE NEXT LARGER MANHOLE SIZE SHALL BE USED.
2. TABLES 2 TO 5 ARE BASED ON A MIN SEPARATION DISTANCE "S" OF 15.5" OR INTERSECTION PIPE OD/2, WHICHEVER IS GREATER, BETWEEN MAIN AND INTERSECTING PIPES ALONG THE MANHOLE INSIDE WALL ARC.
3. PIPE WALL THICKNESS USED IN TABLES 2 TO 5 ARE BASED ON RCP. THE DESIGN ENGINEER MAY CALCULATE TO SEE IF THINNER WALL PIPES CAN MEET THE SEPARATION CRITERIA FOR ANGLES SMALLER THAN THE TABLES ALLOW.
4. LIMITATIONS TO BASE HEIGHT ARE BASED ON RESISTING BUOYANT UPLIFT FORCES BASED ON WATER AT GROUND SURFACE AND A SAFETY FACTOR OF 1.20.
5. A SPECIAL DESIGN IS REQUIRED IF MANHOLE ID IS GREATER THAN 8 FT.

CITY OF HOUSTON
DEPARTMENT OF PUBLIC WORKS AND ENGINEERING
ENGINEERING, CONSTRUCTION AND REAL ESTATE GROUP

SANITARY SEWER
5'-0" TO 8'-0" DIAMETER
PRECAST CONCRETE MANHOLE NOTES
(NOT TO SCALE)

APPROVED BY: CITY ENGINEER	APPROVED BY: DIRECTOR OF PUBLIC WORKS AND ENGINEERING
EFF DATE: OCT-01-2002	DWG NO: 02082N-03

QUIDDITY
Texas Board of Professional Engineers and Land Surveyors Reg. No. F-23290
6330 West Loop South, Suite 150 • Bellaire, TX 77401 • 713.777.5337

JOB NO: 00050-0099-01 DATE: 1/19/2026

APPROVED BY:

DATE: MAY 2026

DESIGNED BY: MBMITCHELL

DRAWN BY: JMMUSSO

SURVEYED BY:

FB NO. XXXXXX

INTERIM REVIEW
Not intended for construction, bidding or permit purposes.
Engineer: HARRY W. ISENSEE III, P.E.
P.E. Serial No.: 144401
Date: MAY 2026

CITY OF HOUSTON
HOUSTON PUBLIC WORKS

SCOTT STREET NO. 1
LIFT STATION REHABILITATION
CIVIL

CIVIL DETAILS
SHEET 5 OF 16

WBS NUMBER	FOR CITY OF HOUSTON USE ONLY
R-000267-127A-4	
DRAWING SCALE	
AS NOTED	
CITY OF HOUSTON PM	
TAHA LOTIA	
DWG NO. O-C-26	
SHEET NO. 34 OF 220	

K:\00050\00050-0099-01 Scott St. No. 1 Lift Station Rehabilitation - Phase II Design\2 Design Phase\CAD\MISCD-2.dwg

ORIGINAL SCALE IN INCHES FOR REDUCED PLANS

NO.	DATE	REVISIONS	APP.

TYPE 1
OPEN PICK HOLE

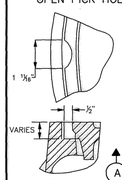

NOTE:
23 1/2" MANHOLE COVER CAN BE USED ONLY FOR REPLACEMENT OF EXISTING MANHOLE COVER.

PLAN

23 1/2" MANHOLE COVER WITH FRAME

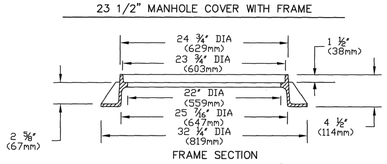

FRAME SECTION

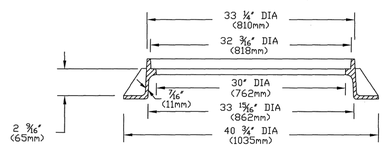

SECTION (A)

32" MANHOLE COVER WITH FRAME

1) NOTE: APPROXIMATE WEIGHTS.
FRAME- 170 LBS 77 kg
COVER- 270 LBS 123 kg
UNIT- 440 LBS 200 kg
2) MATERIAL- GRAY IRON ASTM A48 CL35B
3) CASTING TO MEET M306 PROOF LOAD SPECIFICATION
4) MODEL V-14240 ASY OR APPROVED EQUAL

CITY OF HOUSTON
DEPARTMENT OF PUBLIC WORKS AND ENGINEERING

SANITARY SEWER AND WATER MANHOLE FRAME AND COVER

(NOT TO SCALE)

APPROVED BY: CITY ENGINEER
APPROVED BY: DIRECTOR OF PUBLIC WORKS AND ENGINEERING
EFF DATE: JUL-01-2016
DWG NO: 02090-01

HALF SECTION UNDER PAVEMENT

HALF SECTION UNDER NATURAL GROUND

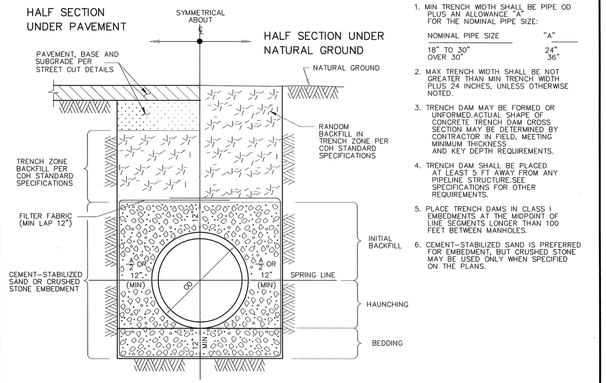

TYPICAL CROSS-SECTION

NOTES:

1. MIN TRENCH WIDTH SHALL BE PIPE OD PLUS AN ALLOWANCE "A" FOR THE NOMINAL PIPE SIZE:

NOMINAL PIPE SIZE	"A"
18" TO 30"	24"
OVER 30"	36"

2. MAX TRENCH WIDTH SHALL BE NOT GREATER THAN MIN TRENCH WIDTH PLUS 24 INCHES, UNLESS OTHERWISE NOTED.
3. TRENCH DAM MAY BE FORMED OR UNFORMED.ACTUAL SHAPE OF CONCRETE TRENCH DAM CROSS SECTION MAY BE DETERMINED BY CONTRACTOR IN FIELD, MEETING MINIMUM THICKNESS AND KEY DEPTH REQUIREMENTS.
4. TRENCH DAM SHALL BE PLACED AT LEAST 5 FT AWAY FROM ANY PIPELINE STRUCTURE.SEE SPECIFICATIONS FOR OTHER REQUIREMENTS.
5. PLACE TRENCH DAMS IN CLASS I EMBEDMENTS AT THE MIDPOINT OF LINE SEGMENTS LONGER THAN 100 FEET BETWEEN MANHOLES.
6. CEMENT-STABILIZED SAND IS PREFERRED FOR EMBEDMENT, BUT CRUSHED STONE MAY BE USED ONLY WHEN SPECIFIED ON THE PLANS.

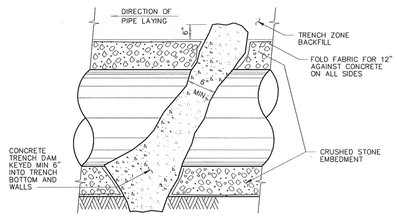

LONGITUDINAL SECTION ALONG PIPE ℄
AT EMBEDMENT TRENCH DAM

CITY OF HOUSTON
DEPARTMENT OF PUBLIC WORKS AND ENGINEERING

SANITARY SEWER EMBEDMENT AND TRENCH ZONE BACKFILL FOR DRY OR WET STABLE TRENCH

(NOT TO SCALE)

APPROVED BY: CITY ENGINEER
APPROVED BY: DIRECTOR OF PUBLIC WORKS AND ENGINEERING
EFF DATE: JUL-01-2016
DWG NO: 02317-01

QUIDDITY
Texas Board of Professional Engineers and Land Surveyors Reg. No. F-23290
6330 West Loop South, Suite 150 • Bellaire, TX 77401 • 713.777.5337

JOB NO: 00050-0099-01 DATE: 1/19/2026

APPROVED BY:
DATE: MAY 2026
DESIGNED BY: MBMITCHELL
DRAWN BY: JMMUSSO
SURVEYED BY:
FB NO. XXXXXX

INTERIM REVIEW
Not intended for construction, bidding or permit purposes.
Engineer: HARRY W. ISENSEE III, P.E.
P.E. Serial No.: 144401
Date: MAY 2026

CITY OF HOUSTON
HOUSTON PUBLIC WORKS

SCOTT STREET NO. 1 LIFT STATION REHABILITATION
CIVIL

CIVIL DETAILS SHEET 6 OF 16

WBS NUMBER	FOR CITY OF HOUSTON USE ONLY
R-000267-127A-4	
DRAWING SCALE	
AS NOTED	
CITY OF HOUSTON PM	
TAHA LOTIA	
DWG NO. O-C-27	
SHEET NO. 35 OF 220	

K:\00050\00050-0099-01 Scott St. No. 1 Lift Station Rehabilitation - Phase II Design\2 Design Phase\CAD\MISCD-2.dwg

ORIGINAL SCALE IN INCHES FOR REDUCED PLANS

NO.	DATE	REVISIONS	APP.

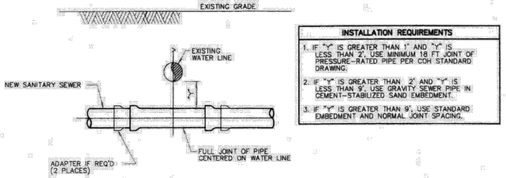

INSTALLATION REQUIREMENTS

1. IF "X" IS GREATER THAN 1' AND "Y" IS LESS THAN 2', USE MINIMUM 18 FT JOINT OF PRESSURE-RATED PIPE PER COH STANDARD DRAWING.
2. IF "Y" IS GREATER THAN 2' AND "Y" IS LESS THAN 9', USE GRAVITY SEWER PIPE IN CEMENT-STABILIZED SAND EMBEDMENT.
3. IF "Y" IS GREATER THAN 9', USE STANDARD EMBEDMENT AND NORMAL JOINT SPACING.

NEW SANITARY SEWER CROSSING EXISTING WATER LINE

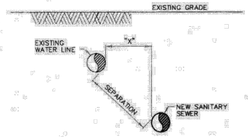

INSTALLATION REQUIREMENTS

1. IF SEPARATION IS LESS THAN 9', USE PRESSURE-RATED PIPE MH TO MH; "X" MUST BE AT LEAST 4 FT. VERTICAL SEPARATION MUST BE AT LEAST 2 FT.
2. IF SEPARATION IS 9' OR GREATER, USE STANDARD PIPE AND EMBEDMENT.

NEW SANITARY SEWER PARALLEL TO EXISTING WATER LINE

NOTES:

1. SANITARY SEWER MUST BE BELOW WATER LINE WHEREVER POSSIBLE. WHEN WATERLINE IS BELOW THE SANITARY SEWER PROVIDE MINIMUM 2 FT SEPARATION AND INSTALL PIPE IN ACCORDANCE TO CHAPTER 7 TABLE 7.3 OF COH DESIGN MANUAL.
2. WHEN PRESSURE-RATED PIPE IS REQUIRED, PROVIDE PIPE WITH MINIMUM 150 psi PRESSURE RATING.
3. ADAPTERS MUST BE FACTORY MOLDED OR FABRICATED, WITH RING STIFFNES AT LEAST EQUAL TO THE ADJOINING SANITARY SEWER PIPE, AND USING RESILIENT GASKET OR SEAL MATERIAL. FLEXIBLE RUBBER "BOOT" TYPE ADAPTERS WILL NOT BE ACCEPTED.
4. INSTALL FORCE MAINS SAME AS FOR GRAVITY SEWER, USING SPECIFIED PRESSURE PIPE.
5. "X" MUST ALWAYS BE GREATER THAN OR EQUAL TO 1 FT FOR PRESSURE RATED SS AND 2 FT FOR NON-PRESSURE RATED SS.
6. "X" MUST BE GREATER THAN OR EQUAL TO 4 FT.
7. ALTERNATIVES MAY BE SHOWN ON THE DRAWINGS OR DESCRIBED IN THE SPECIFICATIONS.
8. SEPARATION REQUIREMENTS SHOWN HERE DO NOT APPLY TO SERVICE CONNECTIONS – REFER TO PLUMBING CODE FOR APPLICABLE REQUIREMENTS.

INSTALLING SANITARY SEWERS CROSSING OR PARALLEL TO WATER LINES

CITY OF HOUSTON DEPARTMENT OF PUBLIC WORKS AND ENGINEERING	
SANITARY SEWER INSTALLING SANITARY SEWERS CROSSING OR PARALLEL TO WATER LINES (NOT TO SCALE)	
APPROVED BY: CITY ENGINEER	APPROVED BY: DIRECTOR OF PUBLIC WORKS AND ENGINEERING
EFF. DATE: JUL-01-2010	DWG NO: 02531-05

NOTE:
1. THE CONTRACTOR SHALL CENTER A MINIMUM OF 18 FOOT JOINT OF DUCTILE IRON PIPE, OR C900 PVC PIPE ACROSS THE CENTER OF THE PROPOSED STORM SEWER.

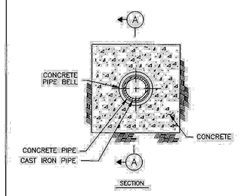

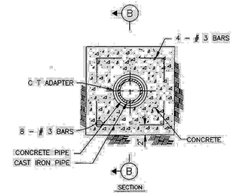

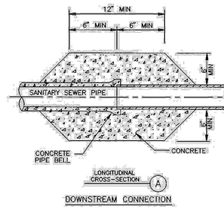

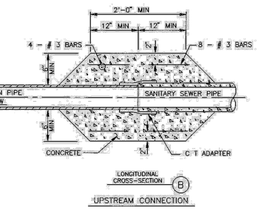

CITY OF HOUSTON DEPARTMENT OF PUBLIC WORKS AND ENGINEERING ENGINEERING, CONSTRUCTION AND REAL ESTATE DIVISION	
SANITARY SEWER DUCTILE IRON PIPE STORM SEWER CROSSING (NOT TO SCALE)	
APPROVED BY: CITY ENGINEER	APPROVED BY: DIRECTOR OF PUBLIC WORKS AND ENGINEERING
EFF DATE:OCT-01-2002	DWG NO: 02531-03

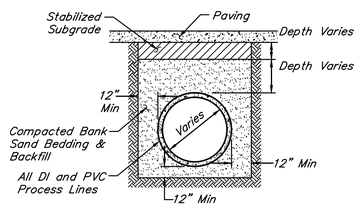

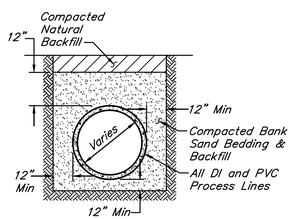

CLASS "C" BEDDING
FOR PLANT PROCESS PIPING DETAIL
NOT TO SCALE

NOTE:
All PVC piping to be installed in accordance with manufacturer's specifications.

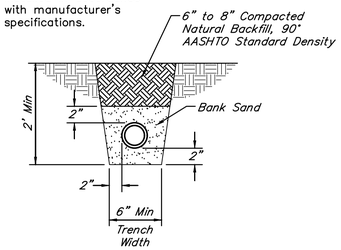

BEDDING FOR SMALL
DIAMETER (<3") PIPING DETAIL
NOT TO SCALE

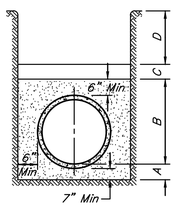

LEGEND:

A – Cement stabilized sand placed before pipe is laid up to flowline of pipe or above (minimum depth 7").
B – Cement stabilized sand, thoroughly rodded, placed after pipe is laid.
C – Earth fill placed same day pipe is laid.
D – Earth fill placed next day (or later) after pipe is laid.

1502 – CLASS "AA"
BEDDING FOR PIPE SEWERS DETAIL
36" DIAMETER AND SMALLER
NOT TO SCALE

QUIDDITY
Texas Board of Professional Engineers and Land Surveyors Reg. No. F-23290
6330 West Loop South, Suite 150 • Bellaire, TX 77401 • 713.777.5337

JOB NO: 00050-0099-01 DATE: 1/19/2026

APPROVED BY:	INTERIM REVIEW Not intended for construction, bidding or permit purposes. Engineer: HARRY W. ISENSEE III, P.E. P.E. Serial No.: 144401 Date: MAY 2026
DATE: MAY 2026	
DESIGNED BY: MBMITCHELL	
DRAWN BY: JMMUSSO	
SURVEYED BY:	
FB NO. XXXXXX	

CITY OF HOUSTON
HOUSTON PUBLIC WORKS

SCOTT STREET NO. 1
LIFT STATION REHABILITATION
CIVIL

CIVIL DETAILS
SHEET 7 OF 16

WBS NUMBER	FOR CITY OF HOUSTON USE ONLY
R-000267-127A-4	
DRAWING SCALE	
AS NOTED	
CITY OF HOUSTON PM	
TAHA LOTIA	
DWG NO. O-C-28	
SHEET NO. 36 OF 220	

K:\00050\00050-0099-01 Scott St. No. 1 Lift Station Rehabilitation - Phase II Design\2 Design Phase\CAD\MISCD-2.dwg

ORIGINAL SCALE IN INCHES FOR REDUCED PLANS

DocuSign Envelope ID: 9B122261-CF05-457B-9A65-2650F40B86D5

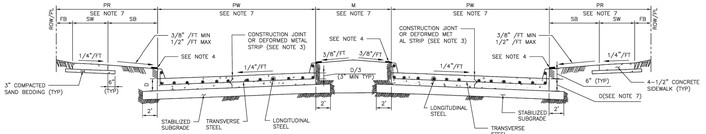

TYPICAL DOUBLE ROADWAY SECTION FOR CONCRETE PAVEMENT WITH CURBS

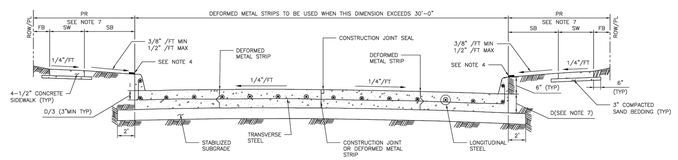

TYPICAL SINGLE ROADWAY SECTION FOR CONCRETE PAVEMENT WITH CURBS

TABLE 1

REINFORCING STEEL BAR SIZES AND SPACINGS FOR VARIOUS PAVEMENT THICKNESSES (D) WITH: MAXIMUM TRANSVERSE CONTROL JOINT SPACING = 20'-0"
MAXIMUM EXPANSION JOINT SPACING = 80'-0"
fc' = 4,000 PSI/28 DAYS AND FY = 60,000 PSI

PAVEMENT THICKNESS 'D' (IN)	PAVEMENT WIDTH 'PW' (FT)	LONGITUDINAL STEEL									TRAVERSE STEEL		
		#4 BARS			#5 BARS			#6 BARS			#4 BARS	#5 BARS	#6 BARS
		NUMBER OF BARS	SPACING (IN)	END BAR SPACING (IN)	NUMBER OF BARS	SPACING (IN)	END BAR SPACING (IN)	NUMBER OF BARS	SPACING (IN)	END BAR SPACING (IN)	SPACING (IN)	SPACING (IN)	SPACING (IN)
6	28	17	20.50	4.00	–	–	–	–	–	–	36	–	–
7	25	17	18.25	4.00	–	–	–	–	–	–	36	–	–
7	35	24	18.00	3.00	–	–	–	–	–	–	36	–	–
7	36	25	17.75	3.00	–	–	–	–	–	–	36	–	–
7	37	25	18.25	3.00	–	–	–	–	–	–	36	–	–
7	41	28	18.00	3.00	–	–	–	–	–	–	36	–	–
7	45	31	17.75	3.75	–	–	–	–	–	–	36	–	–
8	25	20	15.50	2.75	13	24.50	3.0	–	–	–	36	36	–
8	34	27	15.50	2.50	17	25.00	4.0	–	–	–	36	36	–
8	35	27	16.00	2.00	18	24.25	4.0	–	–	–	36	36	–
8	36	28	15.75	3.25	18	25.00	3.0	–	–	–	30	36	–
8	44	24	15.75	4.00	22	24.75	4.0	–	–	–	30	36	–
8	45	35	15.75	2.25	23	24.25	3.0	–	–	–	30	36	–
9	25	22	14.00	3.00	14	22.50	4.0	–	–	–	36	36	–
9	34	31	13.50	2.00	19	22.25	3.5	–	–	–	30	36	–
9	35	31	13.75	3.75	20	21.75	3.5	–	–	–	30	36	–
9	36	32	13.75	3.00	21	21.25	3.5	–	–	–	30	36	–
9	44	39	13.75	2.75	25	21.75	3.0	–	–	–	24	36	–
9	45	39	14.00	4.00	26	21.25	4.5	–	–	–	24	36	–
10	25	24	12.75	3.50	17	18.25	4.0	–	–	–	36	36	36
10	34	33	12.50	4.00	21	20.00	4.0	–	–	–	30	36	36
10	35	34	12.50	3.75	23	18.75	4.0	–	–	–	30	36	36
10	36	35	12.50	3.50	24	18.50	3.0	–	–	–	30	36	36
10	44	44	12.00	4.00	29	18.50	4.5	–	–	–	24	36	36
10	45	44	12.50	3.00	29	19.00	3.0	–	–	–	24	36	36
11	25	27	11.25	3.00	17	18.25	4.0	12	26.75	3	36	36	36
11	34	36	11.50	2.75	24	17.50	2.5	17	25.00	4	24	36	36
11	35	37	11.50	3.00	24	18.00	3.0	17	25.75	4	24	36	36
11	36	40	11.00	2.00	25	17.75	3.0	17	26.50	4	24	36	36
11	44	48	11.125	2.50	30	18.00	3.0	21	26.00	4	24	36	36
11	45	49	11.125	3.00	31	17.75	4.0	22	25.50	3	24	36	36
12	25	–	–	–	19	16.25	4.0	13	24.50	3	36	36	36
12	34	–	–	–	28	16.00	4.0	18	23.50	4	24	36	36
12	35	–	–	–	28	16.50	4.0	19	23.00	3	24	36	36
12	36	–	–	–	27	16.25	4.5	20	22.25	4.5	24	36	36
12	44	–	–	–	33	16.25	4.0	24	22.50	5	24	30	36
12	45	–	–	–	35	15.75	3.0	25	22.25	3	24	30	36

MINIMUM LAP LENGTH (L):
A. # 4 BARS ; L = 22 INCHES
B. # 5 BARS ; L = 27 INCHES
C. # 6 BARS ; L = 32 INCHES

NOTES:
1. THE MAXIMUM WIDTH BETWEEN LONGITUDINAL JOINTS SHALL NOT EXCEED 15'-0".
2. ALL EARTHEN AREAS ARE TO BE HYDROMULCHED UNLESS SHOWN OTHERWISE ON DRAWINGS.
3. CONTRACTOR MAY SAW CUT IN LIEU OF DEFORMED METAL STRIP.
4. USE STRIP OF SOD GRASS TO PREVENT EROSION UNTIL STAND OF GRASS IS ESTABLISHED.
5. AN EQUAL OR LARGER AREA OF WELDED REINFORCEMENT BAR CONFORMING TO ASTM A497, MAY BE SUBSTITUTED FOR REBARS LISTED IN TABLE 1.
6. IF AVAILABLE ROW IS NOT SUFFICIENT TO ACCOMMODATE SIDEWALK WIDTH (SW) ACCORDING TO IDM REQUIREMENTS, ENGINEER SHALL OBTAIN A VARIANCE FROM THE CITY ENGINEER.
7. REFER TO CONTRACT DRAWINGS FOR PAVEMENT WIDTH (PW) AND PAVEMENT THICKNESS (D), MEDIAN (M), PEDESTRIAN REALM (PR), SIDEWALK (SW), FRONTAGE BUFFER (FB), AND SAFETY BUFFER (SB) WIDTHS.

APPROVED BY:	APPROVED BY:
Sukat Kanwar	Hailing Nguyen
CITY ENGINEER	CITY TRAFFIC ENGINEER
APPROVED BY: Carl Stadelbach	
DIRECTOR OF HOUSTON PUBLIC WORKS	
EFF DATE: NOV-27-2023	DWG NO: 02751-01

CITY OF HOUSTON
HOUSTON PUBLIC WORKS STANDARD

CONCRETE PAVEMENT DETAILS

FOR CITY OF HOUSTON USE ONLY

DRAWING SCALE
NOT TO SCALE

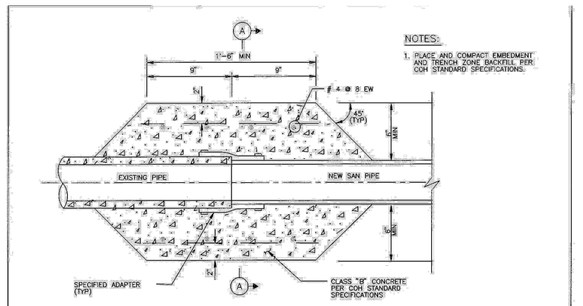

NOTES:
1. PLACE AND COMPACT EMBEDMENT AND TRENCH ZONE BACKFILL PER COH STANDARD SPECIFICATIONS.

LONGITUDINAL SECTION

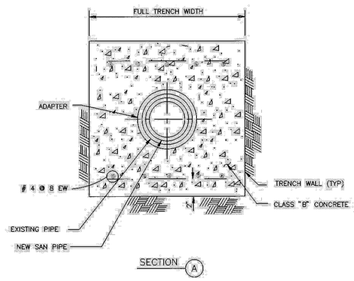

CITY OF HOUSTON
DEPARTMENT OF PUBLIC WORKS AND ENGINEERING
ENGINEERING, CONSTRUCTION AND REAL ESTATE DIVISION

SANITARY SEWER
PIPE TRANSITION FOR 36"
SEWER AND SMALLER
(NOT TO SCALE)

APPROVED BY:	APPROVED BY:
Brandon Gin	
CITY ENGINEER	DIRECTOR OF PUBLIC WORKS AND ENGINEERING
EFF DATE: OCT-01-2002	DWG NO: 02531-04

NO.	DATE	REVISIONS	APP.

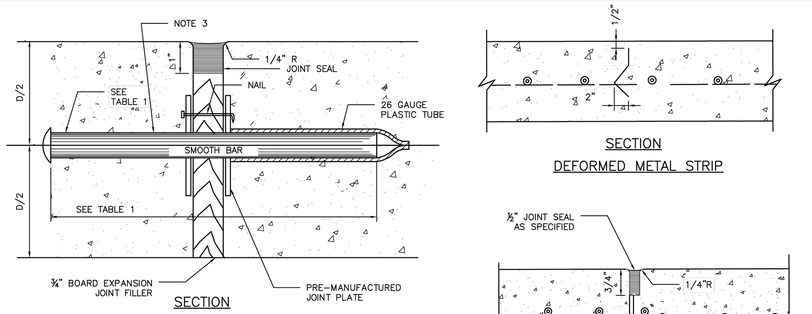

SECTION

DOWEL TYPE EXPANSION JOINT

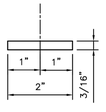

PLAN VIEW

JOINT PLATE

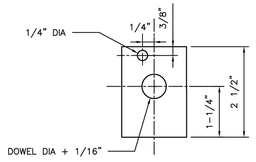

ELEVATION VIEW

JOINT PLATE

SECTION

DEFORMED METAL STRIP

SECTION

CONSTRUCTION JOINT SEAL

NOTES:
1. STEEL TO MEET ASTM STANDARD SPECIFICATIONS FOR CONCRETE REINFORCING BARS. UNITS TO BE SPACED 12" CENTER ON CENTER.
2. EXPANSION JOINT TO BE PLACED AT THE END OF EACH CURB RADIUS.
3. CENTER DOWEL HORIZONTALLY ON JOINT.
4. CENTER DOWEL VERTICALLY IN CONCRETE BASE. EXTEND THICKENED CONCRETE AS NEEDED TO MAINTAIN 3" MIN COVER.
5. CITY OF HOUSTON APPROVED PRODUCTS MAY BE USED AS JOINT PLATE ALTERNATIVE.

TABLE 1

PAVEMENT THICKNESS (IN)	DOWEL SIZES AND SPACINGS		
	DIAMETER (IN)	LENGTH (IN)	SPACING (IN)
6	3/4	18	12
7	1	18	12
8	1	18	12
9	1 1/4	18	12
10	1 1/4	18	12
11	1 1/4	18	12
12	1 1/4	18	12

CITY OF HOUSTON
HOUSTON PUBLIC WORKS STANDARD

PAVEMENT EXPANSION AND CONSTRUCTION JOINT DETAILS

(SCALE: NOT TO SCALE)

APPROVED BY:	
Sukat Kanwar (DocuSigned by: SEF5B0C861F5478...)	Carl Stadelbach (DocuSigned by: A8BC3185F2594B4...)
CITY ENGINEER	DIRECTOR OF HPW
Hailing Nguyen (DocuSigned by: 95A29EF0A758ACD...)	
CITY TRAFFIC ENGINEER	
EFF DATE: NOV-27-2023	DWG NO: 02752-01

DISCLAIMER:
THE USE OF THIS STANDARD IS GOVERNED BY THE TEXAS ENGINEERING PRACTICE ACT. THE DESIGN REQUIREMENTS ON THIS STANDARD DO NOT PURPORT TO ADDRESS ALL OF THE SAFETY CONCERNS ASSOCIATED WITH THEIR USE. THE ENGINEER OF RECORD (EOR) IS TO REVIEW THESE DESIGN REQUIREMENTS AND BY AUTHORIZING THEIR USE, ACCEPTS RESPONSIBILITY FOR THEIR APPLICABILITY, ADEQUACY AND SAFETY. NO WARRANTY OF ANY KIND IS MADE BY THE CITY OF HOUSTON FOR ANY PURPOSES WHATSOEVER. THE CITY OF HOUSTON ASSUMES NO RESPONSIBILITY FOR INCORRECT RESULTS OR DAMAGES RESULTING FROM ITS USE.

COPYRIGHT © 2023 BY THE CITY OF HOUSTON
ALL RIGHTS RESERVED
THIS DRAWING IS THE PROPERTY OF THE CITY OF HOUSTON AND IS NOT TO BE USED IN WHOLE OR IN PART FOR ANY PURPOSE WITHOUT THE WRITTEN CONSENT OF THE CITY OF HOUSTON. ANY REUSE OF THIS DRAWING FOR ANY PURPOSE WITHOUT THE WRITTEN CONSENT OF THE CITY OF HOUSTON IS WITHOUT LIABILITY OR LEGAL EXPOSURE TO THE CITY OF HOUSTON, AND ANY REUSE IS MADE BY THE CITY OF HOUSTON FOR ANY PURPOSES WHATSOEVER. THE CITY OF HOUSTON ASSUMES NO RESPONSIBILITY FOR INCORRECT RESULTS OR DAMAGES RESULTING FROM ITS USE.

QUIDDITY
Texas Board of Professional Engineers and Land Surveyors Reg. No. F-23290
6330 West Loop South, Suite 150 • Bellaire, TX 77401 • 713.777.5337

JOB NO: 00050-0099-01 DATE: 1/19/2026

APPROVED BY:
DATE: MAY 2026
DESIGNED BY: MBMITCHELL
DRAWN BY: JMMUSSO
SURVEYED BY:
FB NO. XXXXXX

INTERIM REVIEW
Not intended for construction, bidding or permit purposes.
Engineer: HARRY W. ISENSEE III, P.E.
P.E. Serial No.: 144401
Date: MAY 2026

CITY OF HOUSTON
HOUSTON PUBLIC WORKS

SCOTT STREET NO. 1
LIFT STATION REHABILITATION
CIVIL

CIVIIL DETAILS
SHEET 8 OF 16

WBS NUMBER	FOR CITY OF HOUSTON USE ONLY
R-000267-127A-4	
DRAWING SCALE	
AS NOTED	
CITY OF HOUSTON PM	
TAHA LOTIA	
DWG NO. O-C-29	
SHEET NO. 37 OF 220	

DocuSign Envelope ID: 9B122261-CF05-457B-9A65-2650F40B86D5

K:\00050\00050-0099-01 Scott St. No. 1 Lift Station Rehabilitation - Phase II Design\2.Design Phase\CAD\MISCD-2.dwg

ORIGINAL SCALE IN INCHES FOR REDUCED PLANS

NO.	DATE	REVISIONS	APP.

02084–05

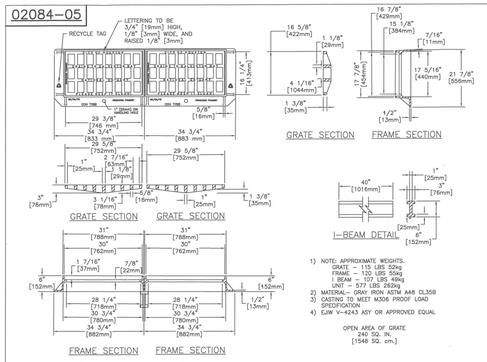

STORM SEWER FRAME AND GRATE
FOR TYPE B–B INLET DOUBLE ASSEMBLY
NTS

02084–06

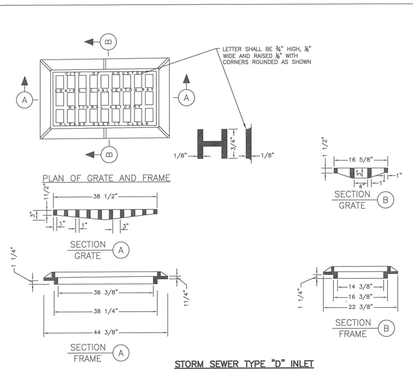

STORM SEWER TYPE "D" INLET
GRATE AND FRAME
NTS

02084–07

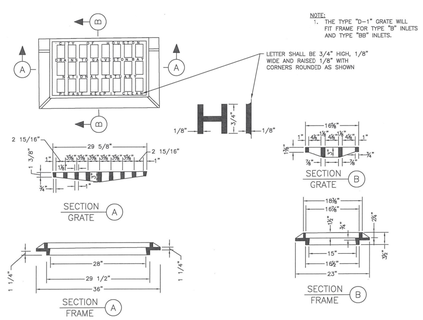

STORM SEWER TYPE "D–1" INLET
GRATE AND FRAME
NTS

02084–08

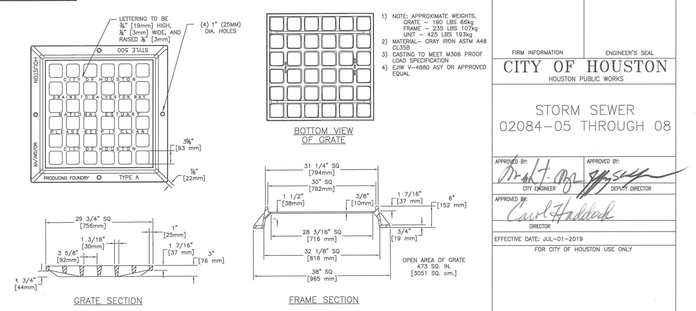

STORM SEWER TYPE "A"
INLET GRATE AND FRAME
NTS

FIRM INFORMATION | ENGINEER'S SEAL

CITY OF HOUSTON
HOUSTON PUBLIC WORKS

STORM SEWER
02084–05 THROUGH 08

APPROVED BY: CITY ENGINEER	APPROVED BY: DEPUTY DIRECTOR
APPROVED BY: DIRECTOR	
EFFECTIVE DATE: JUL–01–2019	
FOR CITY OF HOUSTON USE ONLY	

SHEET NO.

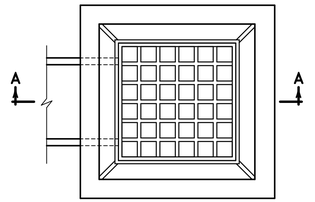

PLAN VIEW

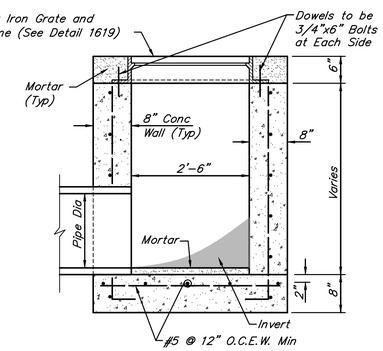

SECTION "A–A"

TYPICAL TYPE "A" CHEMICAL SPILL DRAIN INLET DETAILS
NOT TO SCALE

QUIDDITY
Texas Board of Professional Engineers and Land Surveyors Reg. No. F-23290
6330 West Loop South, Suite 150 • Bellaire, TX 77401 • 713.777.5337

JOB NO: 00050–0099–01 DATE: 1/19/2026

APPROVED BY:	INTERIM REVIEW Not intended for construction, bidding or permit purposes. Engineer: HARRY W. ISENSEE III, P.E. P.E. Serial No.: 144401 Date: MAY 2026
DATE: MAY 2026	
DESIGNED BY: MBMITCHELL	
DRAWN BY: JMMUSSO	
SURVEYED BY:	
FB NO. XXXXXX	

CITY OF HOUSTON
HOUSTON PUBLIC WORKS

SCOTT STREET NO. 1
LIFT STATION REHABILITATION
CIVIL

CIVIL DETAILS
SHEET 9 OF 16

WBS NUMBER	FOR CITY OF HOUSTON USE ONLY
R–000267–127A–4	
DRAWING SCALE	
AS NOTED	
CITY OF HOUSTON PM	
TAHA LOTIA	
DWG NO. 0–C–30	
SHEET NO. 38 OF 220	

K:\00050\00050-0099-01 Scott St. No. 1 Lift Station Rehabilitation - Phase II Design\2 Design Phase\CAD\MISCD-2.dwg

0 1 2 3 4 5 ORIGINAL SCALE IN INCHES FOR REDUCED PLANS

NO.	DATE	REVISIONS	APP.

NOTES:

1. Contractor to manufacture portion of precast manhole walls to accommodate existing San Sew line. Pour base under existing line and place pre-cast manhole into the wet cement. Fill in around existing line with grout.
2. Contractor to cut through exist San Sew line to accommodate doghouse man hole and allow flow to pass through.
3. Contractor is responsible for bypassing and removing all wastewater flow and potential gases. Contractor shall safely clear the pipe of any hazardous or flammable gas prior to cutting.

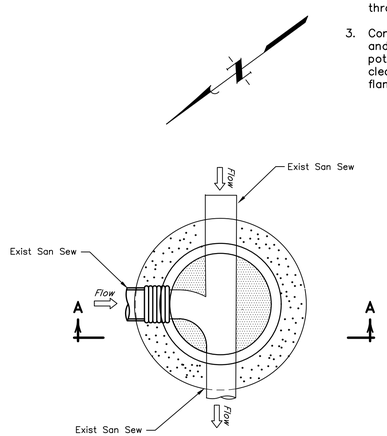

FOUNDATION PLAN

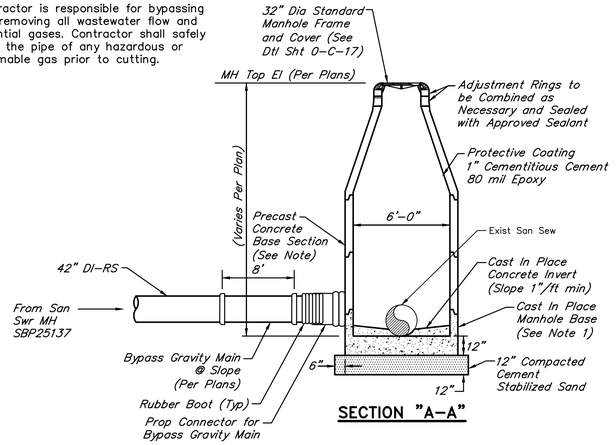

SECTION "A-A"

DOGHOUSE MANHOLE No. 1 DETAIL

NOT TO SCALE

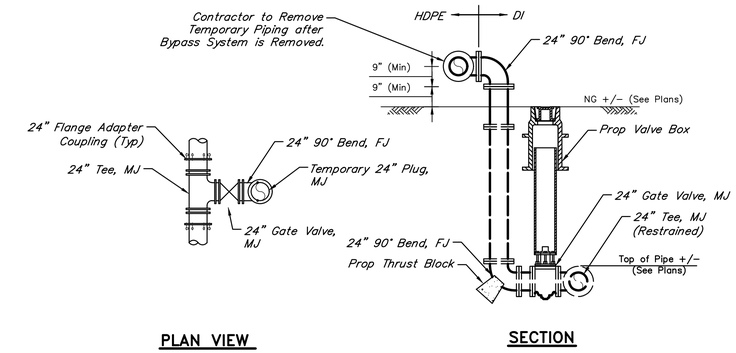

PLAN VIEW

SECTION

UNDERGROUND PIPING PROFILE TEMPORARY BYPASS CONNECTION JUNCTION

NOT TO SCALE

1. Contractor to manufacture portion of precast manhole walls to accommodate existing San Sew line. Pour base under existing line and place pre-cast manhole into the wet cement. Fill in around existing line with grout.
2. Contractor to cut through exist San Sew line to accommodate doghouse man hole and allow flow to pass through.
3. Contractor is responsible for bypassing and removing all wastewater flow and potential gases. Contractor shall safely clear the pipe of any hazardous or flammable gas prior to cutting.

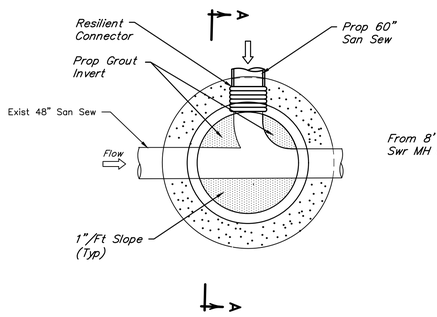

FOUNDATION PLAN

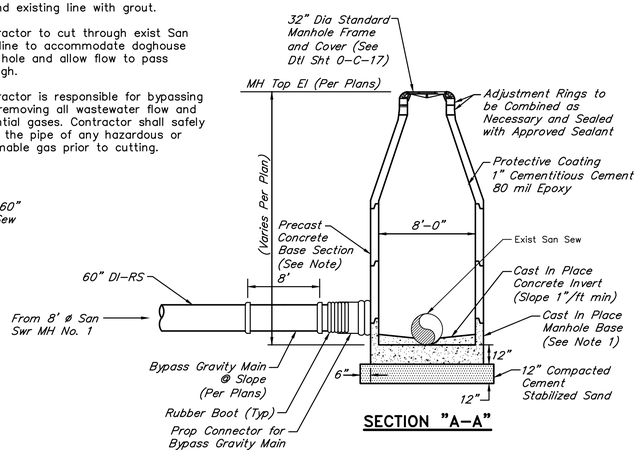

SECTION "A-A"

DOGHOUSE MANHOLE No. 2 DETAIL

NOT TO SCALE

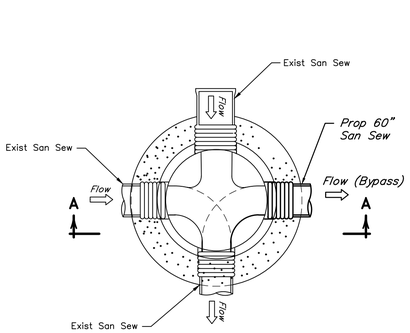

PLAN VIEW

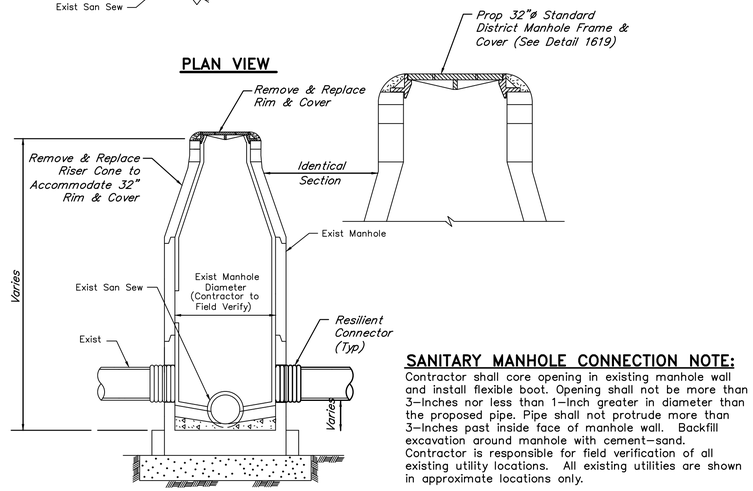

SECTION "A-A"

CONNECTION TO EXISTING MANHOLE

NOT TO SCALE

NOTES:

1. Any damage to existing manhole is responsibility of Contractor. Contractor to perform repairs or manhole replacement at no additional cost.
2. Provide backfill to match adjacent pipe trench backfill per standard specification.

SANITARY MANHOLE CONNECTION NOTE:

Contractor shall core opening in existing manhole wall and install flexible boot. Opening shall not be more than 3-Inches nor less than 1-Inch greater in diameter than the proposed pipe. Pipe shall not protrude more than 3-Inches past inside face of manhole wall. Backfill excavation around manhole with cement-sand. Contractor is responsible for field verification of all existing utility locations. All existing utilities are shown in approximate locations only.

QUIDDITY
Texas Board of Professional Engineers and Land Surveyors Reg. No. F-23290
6330 West Loop South, Suite 150 • Bellaire, TX 77401 • 713.777.5337

JOB NO: 00050-0099-01	DATE: 1/19/2026
APPROVED BY:	
DATE: MAY 2026	
DESIGNED BY: MBMITCHELL	
DRAWN BY: JMMUSSO	
SURVEYED BY:	
FB NO. XXXXXX	

INTERIM REVIEW
Not intended for construction, bidding or permit purposes.
Engineer: HARRY W. ISENSEE III, P.E.
P.E. Serial No.: 144401
Date: MAY 2026

CITY OF HOUSTON
HOUSTON PUBLIC WORKS

SCOTT STREET NO. 1 LIFT STATION REHABILITATION

CIVIL

CIVIL DETAILS SHEET 10 OF 16

WBS NUMBER	FOR CITY OF HOUSTON USE ONLY
R-000267-127A-4	
DRAWING SCALE	
AS NOTED	
CITY OF HOUSTON PM	
TAHA LOTIA	
DWG NO. O-C-31	
SHEET NO. 39 OF 220	

K:\00050\00050-0099-01 Scott St. No. 1 Lift Station Rehabilitation - Phase II Design\2 Design Phase\CAD\MISCD-2.dwg

0 1 2 3 4 5 ORIGINAL SCALE IN INCHES FOR REDUCED PLANS

NO.	DATE	REVISIONS	APP.

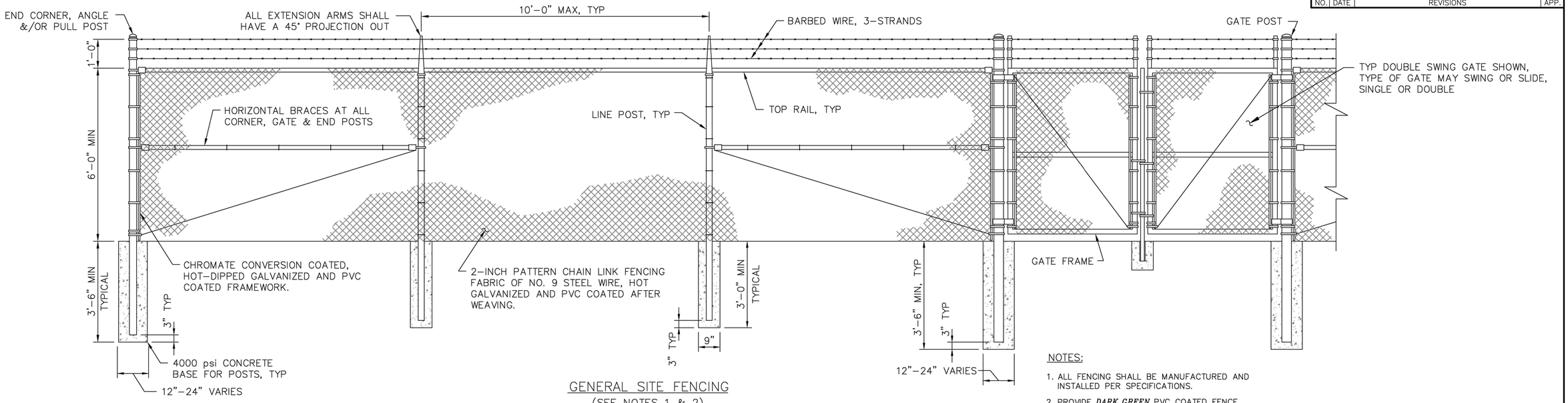

GENERAL SITE FENCING
(SEE NOTES 1 & 2)

DETAIL 17 Z0C08

NOTES:

1. ALL FENCING SHALL BE MANUFACTURED AND INSTALLED PER SPECIFICATIONS.
2. PROVIDE ***DARK GREEN*** PVC COATED FENCE FABRIC, POSTS AND HARDWARE. PROVIDE ***DARK GREEN*** PVC FENCE SLATS.

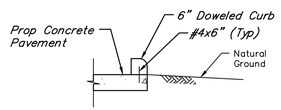

CONCRETE CURB DETAIL
NOT TO SCALE

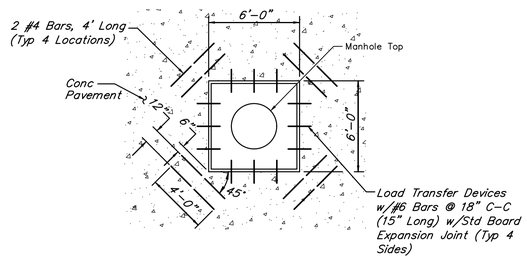

PAVEMENT BLOCK OUT DETAIL
NOT TO SCALE

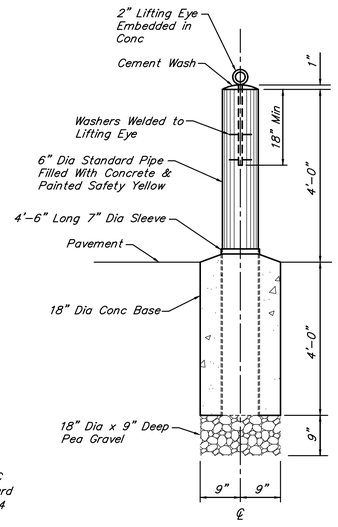

REMOVABLE BOLLARD DETAIL
NOT TO SCALE

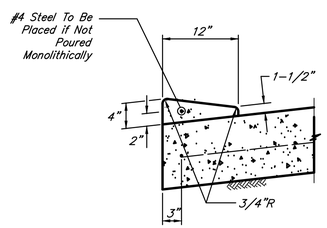

TYPICAL 4"x12"
CONCRETE ROLLOVER CURB DETAIL
NOT TO SCALE

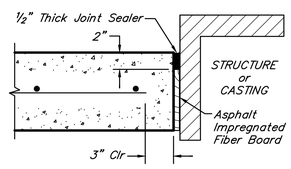

ISOLATION JOINT DETAIL
NOT TO SCALE

QUIDDITY
Texas Board of Professional Engineers and Land Surveyors Reg. No. F-23290
6330 West Loop South, Suite 150 • Bellaire, TX 77401 • 713.777.5337

JOB NO: 00050-0099-01 DATE: 1/19/2026

APPROVED BY:
DATE: MAY 2026
DESIGNED BY: MBMITCHELL
DRAWN BY: JMMUSSO
SURVEYED BY:
FB NO. XXXXXX

INTERIM REVIEW
Not intended for construction, bidding or permit purposes.
Engineer: HARRY W. ISENSEE III, P.E.
P.E. Serial No.: 144401
Date: MAY 2026

CITY OF HOUSTON
HOUSTON PUBLIC WORKS

SCOTT STREET NO. 1
LIFT STATION REHABILITATION
CIVIL

CIVIL DETAILS
SHEET 11 OF 16

WBS NUMBER
R-000267-127A-4
DRAWING SCALE
AS NOTED
CITY OF HOUSTON PM
TAHA LOTIA
DWG NO. O-C-32
SHEET NO. 40 OF 220

FOR CITY OF HOUSTON USE ONLY

K:\00050\00050-0099-01 Scott St. No. 1 Lift Station Rehabilitation - Phase II Design\2 Design Phase\CAD\MISCD-2.dwg

ORIGINAL SCALE IN INCHES FOR REDUCED PLANS

NO.	DATE	REVISIONS	APP.

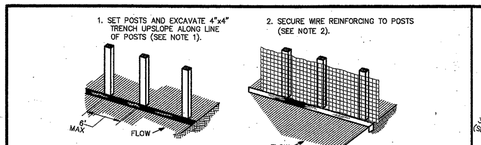

CONSTRUCTION NOTES:

1. SET 2 INCH BY 2 INCH WOODEN STAKES SPACED A MAX OF 8 FEET APART AND EMBEDDED A MIN OF 12 INCHES.
2. WOVEN WIRE REINFORCING TO BE FASTENED SECURELY TO BARRIER POSTS WITH STAPLES.
3. FILTER CLOTH TO BE FASTENED SEQUIRELY TO WOVEN WIRE REINFORCING, WITH TIES SPACED EVERY 24 INCHES AT TOP AND MIDSECTION.
4. MINIMUM HEIGHT OF FILTER SHOULD BE 18 INCHES AND A MAXIMUM OF 36 INCHES ABOVE NATURAL GROUND.
5. WHEN TWO SECTIONS OF FILTER CLOTH ADJOIN EACH OTHER THEY SHALL BE OVERLAPPED 6 INCHES AT THE POSTS, AND FOLDED.
6. SEE COH STANDARD SPECIFICATION FOR FILTER FABRIC BARRIER.

SYMBOL

REINFORCED FILTER FABRIC BARRIER

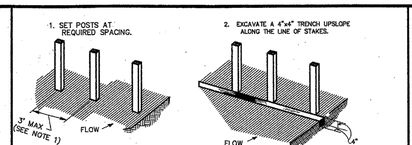

CONSTRUCTION NOTES:

1. 2 INCH THICK BY 2 INCH WOODEN STAKES TO BE SET AT MAX SPACING OF 3 FEET AND EMBEDDED A MIN OF 8 INCHES. IF PREASSEMBLED BARRIER WITH SUPPORT NETTING IS USED, SPACING OF POST MAY BE INCREASED TO 8 FEET MAX.
2. ATTACH FILTER FABRIC TO WOODEN STAKES. FILTER FABRIC BARRIER SHALL HAVE A MIN HEIGHT OF 18 INCHES AND MAX HEIGHT OF 36 INCHES ABOVE NATURAL GROUND.
3. WHEN TWO SECTIONS OF FILTER CLOTH ADJOIN EACH OTHER THEY SHOULD BE OVERLAPPED 6 INCHES AT THE POSTS, AND FOLDED.
4. SEE COH STANDARD SPECIFICATION FOR FILTER FABRIC BARRIER.

FF
SYMBOL

FILTER FABRIC BARRIER

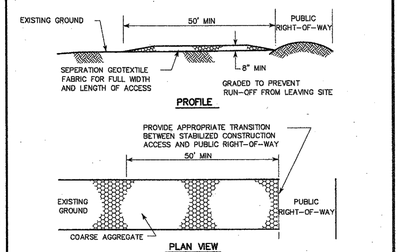

CONSTRUCTION NOTES:

1. LENGTH SHALL BE AS SHOWN ON THE CONSTRUCTION DRAWINGS, BUT NOT LESS THAN 50 FEET.
2. THICKNESS SHALL BE NOT LESS THAN 8 INCHES.
3. WIDTH SHALL BE NOT LESS THAN FULL WIDTH OF ALL POINTS OF INGRESS OR EGRESS.
4. STABILIZATION FOR OTHER AREAS SHALL HAVE THE SAME AGGREGATE THICKNESS AND WIDTH REQUIREMENTS AS THE STABILIZED CONSTRUCTION ACCESS, UNLESS OTHERWISE SHOWN ON THE CONSTRUCTION DRAWINGS.
5. STABILIZED AREA MAY BE WIDENED OR LENGTHENED TO ACCOMODATE A WASHING AREA. AN OUTLET SEDIMENT TRAP MUST BE PROVIDED FOR THE WASHING AREA.
6. COH STANDARD SPECIFICATION FOR STABILIZED CONSTRUCTION ACCESS.
7. STABILIZED CONSTRUCTION ACCESS SHALL BE MAINTAINED FREE OF SEDIMENT FOR THE DURATION OF THE PROJECT.

SC
SYMBOL

STABILIZED CONSTRUCTION ACCESS

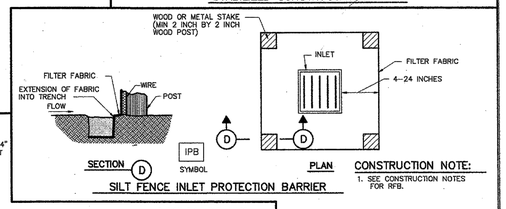

CONSTRUCTION NOTE:

1. SEE CONSTRUCTION NOTES FOR RFB.

SILT FENCE INLET PROTECTION BARRIER

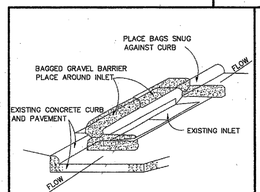

INLET PROTECTION BARRIER

(FOR STAGE II INLETS)
BAGGED GRAVEL BARRIER

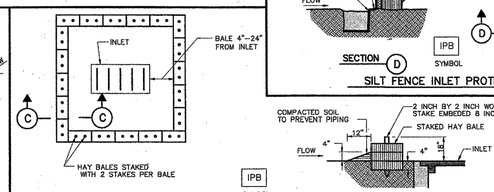

HAY BALE INLET PROTECTION BARRIER

CITY OF HOUSTON
DEPARTMENT OF PUBLIC WORKS AND ENGINEERING

STORM WATER POLLUTION PREVENTION PLAN DETAILS

(NOT TO SCALE)

APPROVED: CITY ENGINEER
APPROVED: DIRECTOR OF PUBLIC WORKS AND ENGINEERING

EFF DATE: JULY-01-2010
DWG NO: 01571-01

PIPING	PIPE SUPPORT SIZE
DIA. ≤ 6"	3" SUPPORT, 10" BASE
6"< DIA. < 24"	4" SUPPORT, 12" BASE
24" ≤ DIA.	6" SUPPORT, 18" BASE

NOTES:

1. ADJUSTABLE PIPE SUPPORT ASSEMBLY TO BE 316SS.
2. IF HEIGHT OF SUPPORT IS GREATER THAN TWICE THE BASE DIAMETER, SUPPORT SHALL BE ANCHORED TO CONCRETE.

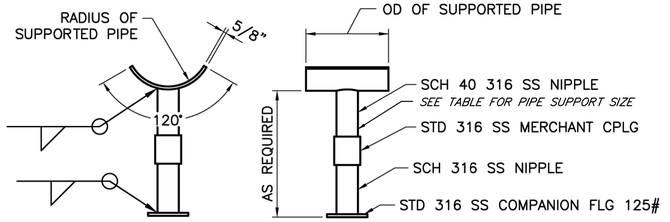

TYP ADJUSTABLE PIPE SUPPORT

(SEE NOTES)

DETAIL 2 Z0C02

MANHOLE SIZE *(NOTE B)*	
FORCEMAIN DIAMETER	MANHOLE DIAMETER
8"	4'-0"
18"	5'-0"
30"	8'-0"

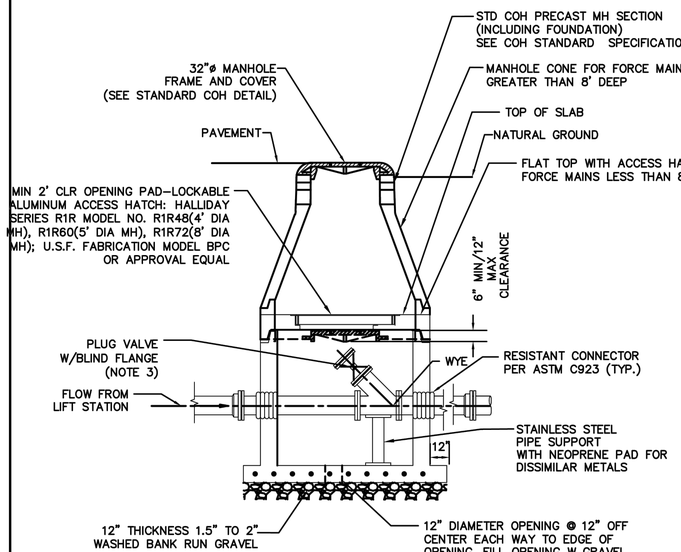

BELOW GROUND BYPASS DETAIL

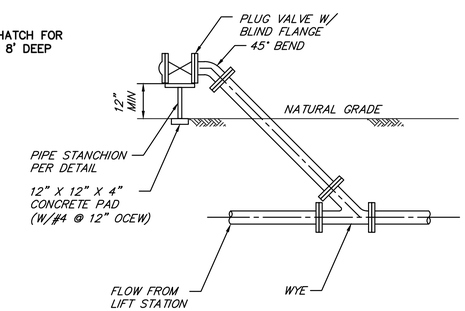

ABOVE GROUND BYPASS DETAIL

USE OF THIS DETAIL MUST BE APPROVED BY WASTEWATER OPERATIONS.

NOTES:

1. PROVIDE LINED DUCTILE IRON PIPE, THICK, CLASS 53, FOR FORCE MAIN WITHIN 12" OF OUTSIDE FACE OF MANHOLE. JOINTS WITHIN MANHOLE MAY BE FLANGED (AS SHOWN OR GROOVED (PER ASTM 606) WITHIN MANHOLE, WITH 316 STAINLESS STEEL BOLTS.
2. MANHOLE TOP MAY BE CONCENTRIC CONE, OR FLAT TOP WITH ECCENTRIC OPENING. PROVIDE 32" FRAME AND COVER.
3. ENSURE MIN CLEARANCE OF 18" ON ALL SIDES. OFFSET VALVE ON HATCH/MH OPENING AS NEEDED TO OBTAIN CLEARANCE.

BYPASS MANHOLE DETAIL Z0C12
SCALE: NONE

QUIDDITY
Texas Board of Professional Engineers and Land Surveyors Reg. No. F-23290
6330 West Loop South, Suite 150 • Bellaire, TX 77401 • 713.777.5337

JOB NO: 00050-0099-01 DATE: 1/19/2026

APPROVED BY:
DATE: MAY 2026
DESIGNED BY: MBMITCHELL
DRAWN BY: JMMUSSO
SURVEYED BY:
FB NO. XXXXXX

INTERIM REVIEW
Not intended for construction, bidding or permit purposes.
Engineer: HARRY W. ISENSEE III, P.E.
P.E. Serial No.: 144401
Date: MAY 2026

CITY OF HOUSTON
HOUSTON PUBLIC WORKS

SCOTT STREET NO. 1 LIFT STATION REHABILITATION

CIVIL

CIVIL DETAILS SHEET 12 OF 16

WBS NUMBER	FOR CITY OF HOUSTON USE ONLY
R-000267-127A-4	
DRAWING SCALE	
AS NOTED	
CITY OF HOUSTON PM	
TAHA LOTIA	
DWG NO. 0-C-33	
SHEET NO. 41 OF 220	

K:\00050\00050-0099-01 Scott St. No. 1 Lift Station Rehabilitation - Phase II Design\2 Design Phase\CAD\MISCD-2.dwg

ORIGINAL SCALE IN INCHES FOR REDUCED PLANS

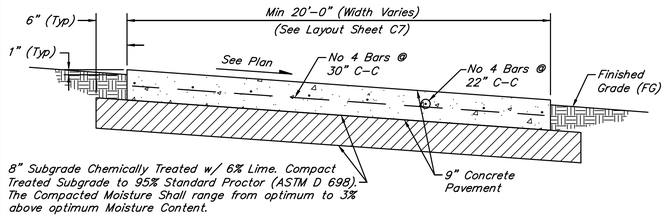

NOTES:

1. Driveway adjacent to proposed plant structures shall have isolation joints (See detail this sheet).
2. Subgrade shall be prepared in accordance with applicable sections of the geotechnical report No. G118-25 by Aviles Engineering Corporation.

TYPICAL CONCRETE PAVEMENT SECTION
NOT TO SCALE

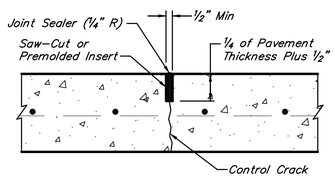

SAW-CUT CONTROL JOINT
NOT TO SCALE

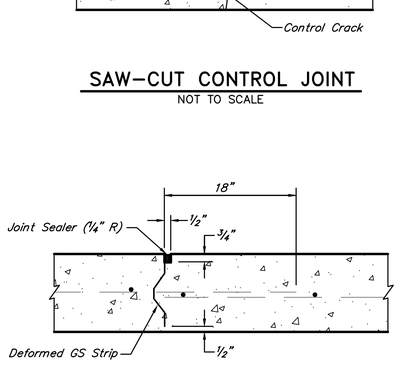

KEYED CONSTRUCTION JOINT
NOT TO SCALE

NOTE: "D" equals pavement thickness.

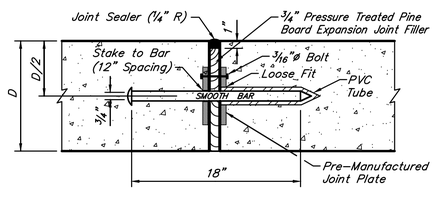

EXPANSION JOINT
NOT TO SCALE

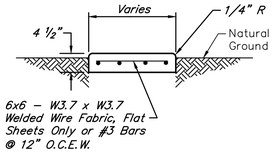

SIDEWALK NOTES:

1. Provide tooled or saw-cut control or keyed construction joints at every 4' and expansion joints at every 20'. (See details this sheet)
2. Slope concrete sidewalks 1/4" per foot to drain away from concrete slabs and foundations toward the proposed drainage system.

TYPICAL CONCRETE PAD AND SIDEWALK DETAIL
NOT TO SCALE

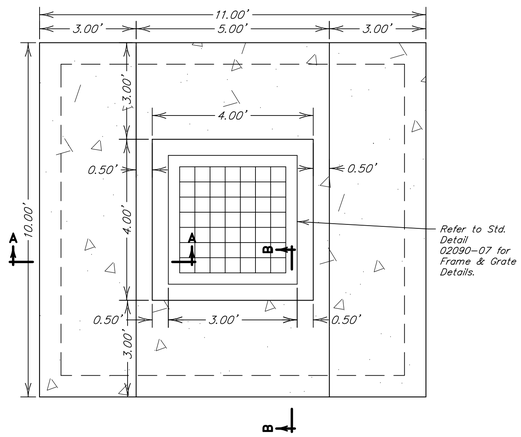

PLAN VIEW
NTS

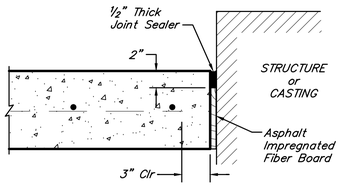

TYPICAL ISOLATION JOINT
NOT TO SCALE

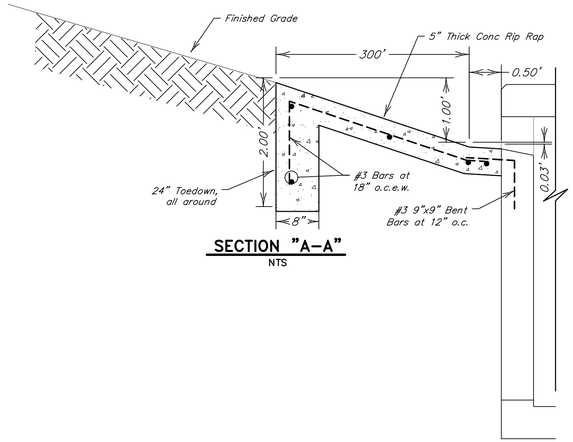

SECTION "A-A"
NTS

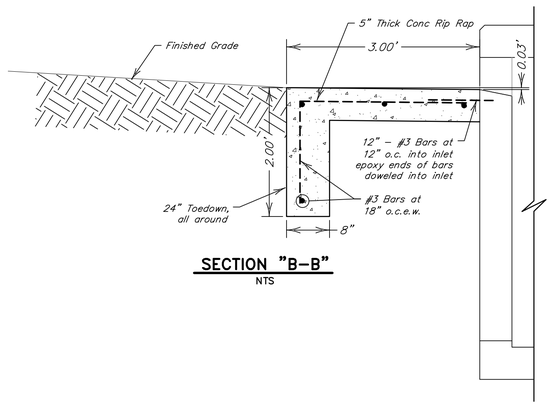

SECTION "B-B"
NTS

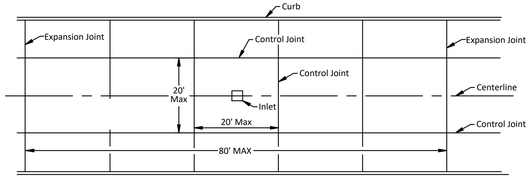

JOINT SPACING AND LAYOUT DETAIL FOR CONCRETE PAVEMENT
NOT TO SCALE

NO.	DATE	REVISIONS	APP.

NOTICE:
FOR YOUR SAFETY, YOU ARE REQUIRED BY TEXAS LAW TO CALL 811 AT LEAST 48 HOURS BEFORE YOU DIG SO THAT UNDERGROUND LINES CAN BE MARKED. THIS SIGNATURE DOES NOT FULFILL YOUR OBLIGATION TO CALL 811

VERIFICATION OF PRIVATE UTILITY LINES

Date:

CenterPoint Energy natural gas utilities shown.
(Gas services lines are not shown). This signature not to be used for conflict verification.
Signature Valid for six months.

Date:

CenterPoint Energy / UNDERGROUND Electrical Facilities Verification ONLY.
(This Signature verifies existing underground facilities - not to be used for conflict verification.)
Signature Valid for six months.

Date:

Approved for AT&T Texas / SWBT underground conduit facilities only.
Signature valid for one year.

QUIDDITY
Texas Board of Professional Engineers and Land Surveyors Reg. No. F-23290
6330 West Loop South, Suite 150 • Bellaire, TX 77401 • 713.777.5337

JOB NO: 00050-0099-01 DATE: 1/19/2026

APPROVED BY:

DATE: MAY 2026

DESIGNED BY: JK

DRAWN BY: JLG

SURVEYED BY:

FB NO. XXXXXX

INTERIM REVIEW
Not intended for construction, bidding or permit purposes.
Engineer: LAUREN J. MUDD, P.E.
P.E. Serial No.: 153971
Date: MAY 2026

CITY OF HOUSTON
HOUSTON PUBLIC WORKS

SCOTT STREET NO. 1 LIFT STATION REHABILITATION
CIVIL
CIVIL DETAILS
SHEET 13 OF 16

WBS NUMBER	FOR CITY OF HOUSTON USE ONLY
R-000267-127A-4	
DRAWING SCALE	
AS NOTED	
CITY OF HOUSTON PM	
TAHA LOTIA	
DWG NO. **O-C-34**	
SHEET NO. 42 OF 220	

K:\00050\00050-0099-01 Scott St. No. 1 Lift Station Rehabilitation - Phase II Design\2 Design Phase\CAD\SITE\Plans\00050-0099-01 CIVIL SHEETS.dwg

0 1 2 3 4 5 ORIGINAL SCALE IN INCHES FOR REDUCED PLANS

PROJECT SUMMARY

CALCULATION DETAILS
- LOADING = HS20/HS25
- APPROX. LINEAR FOOTAGE = 327 LF

STORAGE SUMMARY
- STORAGE VOLUME REQUIRED = 4,048 CF
- PIPE STORAGE VOLUME = 3,146 CF
- BACKFILL STORAGE VOLUME = 949 CF
- TOTAL STORAGE PROVIDED = 4,096 CF
- STONE VOID = 40%

PIPE DETAILS
- DIAMETER = 42"
- CORRUGATION = 2 2/3x1/2
- GAGE = 16
- COATING = ALT2
- WALL TYPE = XFILTRATION
- BARREL SPACING = 12"

BACKFILL DETAILS
- WIDTH AT ENDS = 12"
- ABOVE PIPE = 0"
- WIDTH AT SIDES = 12"
- BELOW PIPE = 0"

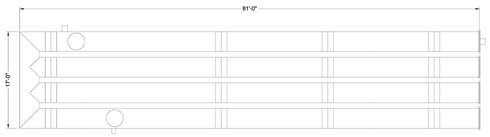

ASSEMBLY
SCALE: 1" = 10'

NOTES

- ALL RISER AND STUB DIMENSIONS ARE TO CENTERLINE. ALL ELEVATIONS, DIMENSIONS, AND LOCATIONS OF RISERS AND INLETS, SHALL BE VERIFIED BY THE ENGINEER OF RECORD PRIOR TO RELEASING FOR FABRICATION.
- ALL FITTINGS AND REINFORCEMENT COMPLY WITH ASTM A998.
- ALL RISERS AND STUBS ARE $2\frac{2}{3}$" x $\frac{1}{2}$" CORRUGATION AND 16 GAGE UNLESS OTHERWISE NOTED.
- RISERS TO BE FIELD TRIMMED TO GRADE.
- QUANTITY OF PIPE SHOWN DOES NOT PROVIDE EXTRA PIPE FOR CONNECTING THE SYSTEM TO EXISTING PIPE OR DRAINAGE STRUCTURES. OUR SYSTEM AS DETAILED PROVIDES NOMINAL INLET AND/OR OUTLET PIPE STUB FOR CONNECTION TO EXISTING DRAINAGE FACILITIES. IF ADDITIONAL PIPE IS NEEDED IT IS THE RESPONSIBILITY OF THE CONTRACTOR.
- BAND TYPE TO BE DETERMINED UPON FINAL DESIGN.
- THE PROJECT SUMMARY IS REFLECTIVE OF THE DYODS DESIGN, QUANTITIES ARE APPROX. AND SHOULD BE VERIFIED UPON FINAL DESIGN AND APPROVAL. FOR EXAMPLE, TOTAL EXCAVATION DOES NOT CONSIDER ALL VARIABLES SUCH AS SHORING AND ONLY ACCOUNTS FOR MATERIAL WITHIN THE ESTIMATED EXCAVATION FOOTPRINT.
- THESE DRAWINGS ARE FOR CONCEPTUAL PURPOSES AND DO NOT REFLECT ANY LOCAL PREFERENCES OR REGULATIONS. PLEASE CONTACT YOUR LOCAL CONTECH REP FOR MODIFICATIONS.

The design and information shown on this drawing is provided as a service to the industry by CONTECH Engineered Solutions LLC ("Contech"). Neither the Contech Engineered Solutions LLC ("Contech") name nor logo may be used or altered, and this notice may not be modified in any manner without the prior written consent of Contech. Contech reserves the right to revise this drawing at any time without prior notice. Contech expressly disclaims any liability or responsibility for such use.

If dimensions(s) between the supplied information upon which the drawing is based and actual field conditions are encountered at the work progresses, these discrepancies must be reported to Contech immediately for re-evaluation of the design. Contech accepts no liability for designs based on missing, incomplete or inaccurate information supplied by others.

NO.	DATE	REVISION DESCRIPTION	BY

CONTECH ENGINEERED SOLUTIONS LLC
www.ContechES.com
9025 Centre Pointe Dr., Suite 400, West Chester, OH 45069
800-338-1122 513-645-7000 513-645-7993 FAX

CONTECH CMP DETENTION SYSTEMS
CONTECH DYODS DRAWING

DYO97248 Scott Street Lift Station
42" Diameter Solid 1-14-25
Houston, TX
DETENTION SYSTEM

PROJECT No.:	SEQ. No.:	DATE:
39894	97248	1/14/2026
DESIGNED: DYO	DRAWN: DYO	
CHECKED: DYO	APPROVED: DYO	
SHEET NO.:	1	

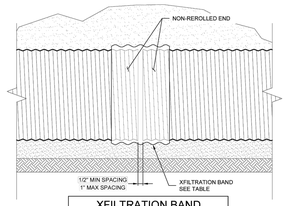

XFILTRATION BAND		
DIAMETER	BAND	FASTENER
UP TO 84"Ø	5-C OR H-12	STD. PLANT FASTENER WITH NO GASKET
84"Ø +	10-C	STD. PLANT FASTENER WITH NO GASKET

XFILTRATION JOINT DETAIL
NOT TO SCALE

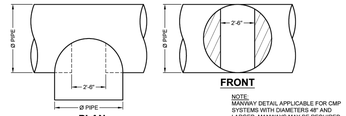

PLAN **FRONT**

TYPICAL MANWAY DETAIL
SCALE: N.T.S.

NOTE:
MANWAY DETAIL APPLICABLE FOR CMP SYSTEMS WITH DIAMETERS 48" AND LARGER. MANWAYS MAY BE REQUIRED ON SMALLER SYSTEMS DEPENDING ON ACTUAL SITE SPECIFIC CONDITIONS.

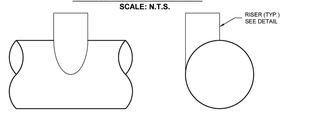

ELEVATION **END**

TYPICAL RISER DETAIL
SCALE: N.T.S.

NOTE:
LADDERS ARE OPTIONAL AND ARE NOT REQUIRED FOR ALL SYSTEMS.

The design and information shown on this drawing is provided as a service to the industry by CONTECH Engineered Solutions LLC ("Contech"). Neither the Contech Engineered Solutions LLC ("Contech") name nor logo may be used or altered, and this notice may not be modified in any manner without the prior written consent of Contech. Contech reserves the right to revise this drawing at any time without prior notice. Contech expressly disclaims any liability or responsibility for such use.

If dimensions(s) between the supplied information upon which the drawing is based and actual field conditions are encountered at the work progresses, these discrepancies must be reported to Contech immediately for re-evaluation of the design. Contech accepts no liability for designs based on missing, incomplete or inaccurate information supplied by others.

NO.	DATE	REVISION DESCRIPTION	BY

CONTECH ENGINEERED SOLUTIONS LLC
www.ContechES.com
9025 Centre Pointe Dr., Suite 400, West Chester, OH 45069
800-338-1122 513-645-7000 513-645-7993 FAX

CONTECH CMP DETENTION SYSTEMS
CONTECH DYODS DRAWING

XFILTRATION RETENTION SYSTEM DETAILS

PROJECT No.:	SEQ. No.:	DATE:
DESIGNED: DYO	DRAWN: DYO	
CHECKED: DYO	APPROVED: DYO	
SHEET NO.:		

TABLE 1:

DIAMETER, D	MIN. COVER	CORR. PROFILE
6"-10"	12"	1 1/2" x 1/4"
12"-48"	12"	2 2/3" x 1/2"
>48"-96"	12"	3" x 1", 5" x 1"
>96"-144"	D/8	3" x 1", 5" x 1"

- STRUCTURAL BACKFILL MUST EXTEND TO LIMITS OF THE TABLE
- TOTAL HEIGHT OF COMPACTED COVER FOR CONVENTIONAL HIGHWAY LOADS IS MEASURED FROM TOP OF PIPE TO BOTTOM OF FLEXIBLE PAVEMENT OR TOP OF RIGID PAVEMENT.

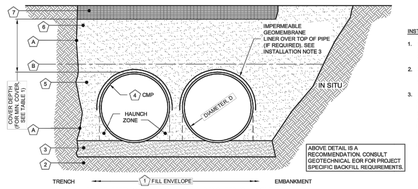

ABOVE DETAIL IS A RECOMMENDATION. CONSULT GEOTECHNICAL EOR FOR PROJECT SPECIFIC BACKFILL REQUIREMENTS.

MINIMUM WIDTH DEPENDS ON SITE CONDITIONS AND ENGINEERING JUDGEMENT

INSTALLATION NOTES

1. WHEN PLACING THE FIRST LIFTS OF BACKFILL IT IS IMPORTANT TO MAKE SURE THAT THE BACKFILL IS PROPERLY COMPACTED UNDER AND AROUND THE PIPE HAUNCHES.
2. OTHER ALTERNATE BACKFILL MATERIAL MAY BE ALLOWED DEPENDING ON SITE SPECIFIC CONDITIONS, AS APPROVED BY SITE ENGINEER.
3. IF SILTING AGENTS FOR SNOW AND ICE REMOVAL ARE USED ON OR NEAR THE PROJECT, AN IMPERMEABLE GEOMEMBRANE LINER IS RECOMMENDED OVER THE TOP OF THE PIPE. THE GEOMEMBRANE LINER IS INTENDED TO HELP PROTECT THE SYSTEM FROM THE POTENTIAL ADVERSE EFFECTS THAT MAY RESULT FROM A CHANGE IN THE SURROUNDING ENVIRONMENT OVER A PERIOD OF TIME. PLEASE REFER TO THE CORRUGATED METAL PIPE DETENTION DESIGN GUIDE FOR ADDITIONAL INFORMATION.

TABLE 2:

XFILTRATION® JOINT STANDARD BACKFILL SPECIFICATIONS

	MATERIAL LOCATION	MATERIAL SPECIFICATION	DESCRIPTION	
1	FILL ENVELOPE WIDTH	PER ENGINEER OF RECORD	MINIMUM TRENCH WIDTH MUST ALLOW ROOM FOR PROPER COMPACTION OF HAUNCH MATERIALS UNDER THE PIPE. THE SUGGESTED MINIMUM TRENCH WIDTH, OR EOR RECOMMENDATION: PIPE ≤ 12": D + 16" PIPE > 12": 1.5D + 12"	MINIMUM EMBANKMENT WIDTH (IN FEET) FOR INITIAL FILL ENVELOPE: PIPE < 24": 3.0D PIPE 24" - 144" D + 4'0" PIPE > 144" D + 10'0"
2	FOUNDATION	**AASHTO 26.5.2** - PER ENGINEER OF RECORD	PRIOR TO PLACING THE BEDDING, THE FOUNDATION MUST BE CONSTRUCTED TO A UNIFORM AND STABLE GRADE. IN THE EVENT THAT UNSUITABLE FOUNDATION MATERIALS ARE ENCOUNTERED DURING EXCAVATION, THEY SHALL BE REMOVED AND FOUNDATION BROUGHT BACK TO GRADE WITH A FILL MATERIAL APPROVED BY THE ENGINEER OF RECORD.	
3	BEDDING	**AASHTO M 43: 3, 357, 4, 467, 5, 56, 57**	ENGINEER OF RECORD TO DETERMINE IF BEDDING IS REQUIRED. PIPE MAY BE PLACED ON THE TRENCH BOTTOM OF A RELATIVELY LOOSE, NATIVE SUITABLE WELL GRADED GRANULAR MATERIAL THAT IS ROUGHLY SHAPED TO FIT THE BOTTOM OF THE PIPE, MIN DEPTH. THE BEDDING MATERIAL MAY BE SUITABLE OPEN GRADED GRANULAR BEDDING CONFORMING TO AASHTO SOIL CLASSIFICATIONS A1, A2, OR A3 WITH MAXIMUM PARTICLE SIZE OF 3" PER AASHTO 26.3.8.1	
4		CORRUGATED METAL PIPE		
5	BACKFILL	FREE-DRAINING, ANGULAR, WASHED-STONE PER **AASHTO M 43: 3, 357, 4, 467, 5, 56, 57** WITH A 1/2" - 2 1/2" PARTICLE SIZE OR APPROVED EQUAL MEETING **AASHTO M 145: A-1** (APPROVED REGIONAL EQUIVALENTS INCLUDE MDOT 6AA, 6A, OR 5G)	HAUNCH ZONE MATERIAL SHALL BE HAND SHOVELED OR SHOVEL SLICED INTO PLACE TO ALLOW FOR PROPER COMPACTION WITHOUT SOFT SPOTS. BACKFILL SHALL BE PLACED IN 8" +/- LOOSE LIFTS AND COMPACTED TO 90% STANDARD PROCTOR PER AASHTO T 99. BACKFILL SHALL BE PLACED SUCH THAT THERE IS NO MORE THAN A TWO LIFT (16") DIFFERENTIAL BETWEEN ANY OF THE PIPES AT ANY TIME DURING THE BACKFILL PROCESS. THE BACKFILL SHOULD BE ADVANCED ALONG THE LENGTH OF THE SYSTEM TO AVOID DIFFERENTIAL LOADING. WHERE CONVENTIONAL COMPACTION TESTING IS NOT PRACTICAL, THE MATERIAL SHALL BE MECHANICALLY COMPACTED UNTIL NO FURTHER YIELDING OF MATERIAL IS OBSERVED UNDER THE COMPACTOR.	
6	COVER MATERIAL	UP TO MIN. COVER - **AASHTO M 145: A-1, A-2, A-3** ABOVE MIN. COVER - PER ENGINEER OF RECORD	COVER MATERIAL MAY INCLUDE NON-BITUMINOUS, GRANULAR ROADBASE MATERIAL WITHIN MIN COVER LIMITS	
7	RIGID OR FLEXIBLE PAVEMENT (IF APPLICABLE)	PER ENGINEER OF RECORD	FLEXIBLE PAVEMENT SHOULD NOT BE COUNTED AS PART OF THE FILL HEIGHT OVER THE CMP. FINAL BACKFILL MATERIAL SELECTION AND COMPACTION REQUIREMENTS SHALL FOLLOW THE PROJECT PLANS AND SPECIFICATIONS PER THE ENGINEER OF RECORD.	
A	OPTIONAL SIDE GEOTEXTILE	NONE	GEOTEXTILE LAYER IS RECOMMENDED ON SIDES OF EXCAVATION TO PREVENT SOIL MIGRATION.	
B	OPTIONAL GEOTEXTILE BETWEEN LAYERS	NONE	IF SOIL TYPES DIFFER AT ANY POINT ABOVE PIPE INVERT, A GEOTEXTILE LAYER IS RECOMMENDED TO BE PLACED BETWEEN THE LAYERS TO PREVENT SOIL MIGRATION.	

NOTES:
- FOR MULTIPLE BARREL INSTALLATIONS, THE RECOMMENDED STANDARD SPACING BETWEEN PARALLEL PIPE RUNS SHALL BE THE PIPE DIAMETER /2 BUT NO LESS THAN 12" FOR DIAMETERS <72", FOR 72" AND LARGER DIAMETERS, THE MINIMUM SPACING IS 36", CONTACT YOUR CONTECH REPRESENTATIVE FOR NONSTANDARD SPACING.
- REGIONAL EQUIVALENTS ACCEPTED WHERE SHOWN. IF NO REGIONAL EQUIVALENT IS LISTED, MATERIAL SHOULD MEET THE AASHTO SPECIFICATION INDICATED.

MANUFACTURER RECOMMENDED BACKFILL
NOT TO SCALE

The design and information shown on this drawing is provided as a service to the industry by CONTECH Engineered Solutions LLC ("Contech"). Neither the Contech Engineered Solutions LLC ("Contech") name nor logo may be used or altered, and this notice may not be modified in any manner without the prior written consent of Contech. Contech reserves the right to revise this drawing at any time without prior notice. Contech expressly disclaims any liability or responsibility for such use.

If dimensions(s) between the supplied information upon which the drawing is based and actual field conditions are encountered at the work progresses, these discrepancies must be reported to Contech immediately for re-evaluation of the design. Contech accepts no liability for designs based on missing, incomplete or inaccurate information supplied by others.

NO.	DATE	REVISION DESCRIPTION	BY

CONTECH ENGINEERED SOLUTIONS LLC
www.ContechES.com
9025 Centre Pointe Dr., Suite 400, West Chester, OH 45069
800-338-1122 513-645-7000 513-645-7993 FAX

CONTECH CMP DETENTION SYSTEMS
CONTECH DYODS DRAWING

XFILTRATION RETENTION SYSTEM DETAILS

PROJECT No.:	SEQ. No.:	DATE:
DESIGNED: DYO	DRAWN: DYO	
CHECKED: DYO	APPROVED: DYO	
SHEET NO.:		

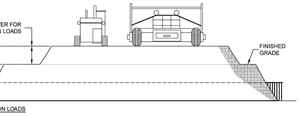

CONSTRUCTION LOADS

FOR TEMPORARY CONSTRUCTION VEHICLE LOADS, AN EXTRA AMOUNT OF COMPACTED COVER MAY BE REQUIRED OVER THE TOP OF THE PIPE. THE HEIGHT-OF-COVER SHALL MEET THE MINIMUM REQUIREMENTS SHOWN IN THE TABLE BELOW. THE USE OF HEAVY CONSTRUCTION EQUIPMENT NECESSITATES GREATER PROTECTION FOR THE PIPE THAN FINISHED GRADE COVER MINIMUMS FOR NORMAL HIGHWAY TRAFFIC.

PIPE SPAN, INCHES	AXLE LOADS (kips)			
	18-50	50-75	75-110	110-150
	MINIMUM COVER (FT)			
12-42	2.0	2.5	3.0	3.0
48-72	3.0	3.0	3.5	4.0
78-120	3.0	3.5	4.0	4.0
126-144	3.5	4.0	4.5	4.5

*MINIMUM COVER MAY VARY, DEPENDING ON LOCAL CONDITIONS. THE CONTRACTOR MUST PROVIDE THE ADDITIONAL COVER REQUIRED TO AVOID DAMAGE TO THE PIPE. MINIMUM COVER IS MEASURED FROM THE TOP OF THE PIPE TO THE TOP OF THE MAINTAINED CONSTRUCTION ROADWAY SURFACE.

CONSTRUCTION LOADING DIAGRAM
SCALE: N.T.S.

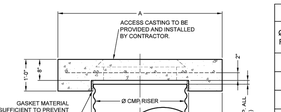

SECTION VIEW

ACCESS CASTING SUPPLIED BY CONTECH IN SELECT MARKETS UNDER SEPARATE SUBMITTAL

REINFORCING TABLE				
Ø CMP RISER	A	Ø B	REINFORCING	**BEARING PRESSURE (PSF)
24"	Ø 4'-4"X4'-6"	26"	#5 @ 12" OCEW #5 @ 12" OCEW	2,410 1,780
30"	Ø 4'-8"X 4'-6"	32"	#5 @ 12" OCEW #5 @ 12" OCEW	2,120 1,530
36"	Ø 5' X 5'	38"	#5 @ 10" OCEW #5 @ 10" OCEW	1,890 1,350
42"	Ø 5'-6" X 5'-6"	44"	#5 @ 10" OCEW #5 @ 9" OCEW	1,720 1,210
48"	Ø 6' X 6'	50"	#5 @ 9" OCEW #5 @ 8" OCEW	1,600 1,100

** ASSUMED SOIL BEARING CAPACITY

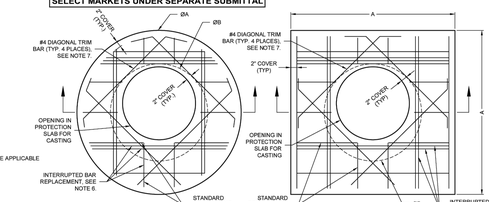

ROUND OPTION PLAN VIEW **SQUARE OPTION PLAN VIEW**

SPECIFICATION FOR DESIGNED DETENTION SYSTEM

SCOPE
THIS SPECIFICATION COVERS THE MANUFACTURE AND INSTALLATION OF THE DESIGNED DETENTION SYSTEM DETAILED IN THE PROJECT PLANS.

MATERIAL
THE MATERIAL SHALL CONFORM TO THE APPLICABLE REQUIREMENTS LISTED BELOW:

ALUMINIZED TYPE 2 STEEL COILS SHALL CONFORM TO THE APPLICABLE REQUIREMENTS OF AASHTO M-274 OR ASTM A-924.

THE GALVANIZED STEEL COILS SHALL CONFORM TO THE APPLICABLE REQUIREMENTS OF AASHTO M-218 OR ASTM A-929.

THE POLYMER COATED STEEL COILS SHALL CONFORM TO THE APPLICABLE REQUIREMENTS OF AASHTO M-246 OR ASTM A-742.

THE ALUMINUM COILS SHALL CONFORM TO THE APPLICABLE REQUIREMENTS OF AASHTO M-197 OR ASTM B-744.

CONSTRUCTION LOADS
CONSTRUCTION LOADS MAY BE HIGHER THAN FINAL LOADS. FOLLOW THE MANUFACTURER'S OR NCSPA GUIDELINES.

PIPE
THE PIPE SHALL BE MANUFACTURED IN ACCORDANCE TO THE APPLICABLE REQUIREMENTS LISTED BELOW:

ALUMINIZED TYPE 2: AASHTO M-36 OR ASTM A-760

GALVANIZED: AASHTO M-36 OR ASTM A-760

POLYMER COATED: AASHTO M-245 OR ASTM A-762

ALUMINUM: AASHTO M-196 OR ASTM B-745

HANDLING AND ASSEMBLY
SHALL BE IN ACCORDANCE WITH NCSPS (NATIONAL CORRUGATED STEEL PIPE ASSOCIATION) FOR ALUMINIZED TYPE 2, GALVANIZED OR POLYMER COATED STEEL. SHALL BE IN ACCORDANCE WITH THE MANUFACTURER'S RECOMMENDATIONS FOR ALUMINUM PIPE.

INSTALLATION
SHALL BE IN ACCORDANCE WITH AASHTO STANDARD SPECIFICATIONS FOR HIGHWAY BRIDGES, SECTION 26, DIVISION II DIVISION II OR ASTM A-798 (FOR ALUMINIZED TYPE 2, GALVANIZED OR POLYMER COATED STEEL) OR ASTM B-788 (FOR ALUMINUM PIPE) AND IN CONFORMANCE WITH THE PROJECT PLANS AND SPECIFICATIONS. IF THERE ARE ANY INCONSISTENCIES OR CONFLICTS THE CONTRACTOR SHOULD DISCUSS AND RESOLVE WITH THE SITE ENGINEER.

IT IS ALWAYS THE RESPONSIBILITY OF THE CONTRACTOR TO FOLLOW OSHA GUIDELINES FOR SAFE PRACTICES.

NOTE:
THESE DRAWINGS ARE FOR CONCEPTUAL PURPOSES AND DO NOT REFLECT ANY LOCAL PREFERENCES OR REGULATIONS. PLEASE CONTACT YOUR LOCAL CONTECH REP FOR MODIFICATIONS.

NOTES:
1. DESIGN IN ACCORDANCE WITH AASHTO, 17th EDITION.
2. DESIGN LOAD HS25.
3. EARTH COVER = 1' MAX.
4. CONCRETE STRENGTH = 3,500 psi
5. REINFORCING STEEL = ASTM A615, GRADE 60.
6. PROVIDE ADDITIONAL REINFORCING AROUND OPENINGS EQUAL TO THE BARS INTERRUPTED, HALF EACH SIDE. ADDITIONAL BARS TO BE IN THE SAME PLANE.
7. TRIM OPENING WITH DIAGONAL #4 BARS, EXTEND BARS A MINIMUM OF 12" BEYOND OPENING, BEND BARS AS REQUIRED TO MAINTAIN BAR COVER.
8. PROTECTION SLAB AND ALL MATERIALS TO BE PROVIDED AND INSTALLED BY CONTRACTOR.
9. DETAIL DESIGN BY DELTA ENGINEERING, BINGHAMTON, NY.

MANHOLE CAP DETAIL
SCALE: N.T.S.

The design and information shown on this drawing is provided as a service to the industry by CONTECH Engineered Solutions LLC ("Contech"). Neither the Contech Engineered Solutions LLC ("Contech") name nor logo may be used or altered, and this notice may not be modified in any manner without the prior written consent of Contech. Contech reserves the right to revise this drawing at any time without prior notice. Contech expressly disclaims any liability or responsibility for such use.

If dimensions(s) between the supplied information upon which the drawing is based and actual field conditions are encountered at the work progresses, these discrepancies must be reported to Contech immediately for re-evaluation of the design. Contech accepts no liability for designs based on missing, incomplete or inaccurate information supplied by others.

NO.	DATE	REVISION DESCRIPTION	BY

CONTECH ENGINEERED SOLUTIONS LLC
www.ContechES.com
9025 Centre Pointe Dr., Suite 400, West Chester, OH 45069
800-338-1122 513-645-7000 513-645-7993 FAX

CONTECH CMP DETENTION SYSTEMS
CONTECH DYODS DRAWING

XFILTRATION RETENTION SYSTEM DETAILS

PROJECT No.:	SEQ. No.:	DATE:
DESIGNED: DYO	DRAWN: DYO	
CHECKED: DYO	APPROVED: DYO	
SHEET NO.:		

NO.	DATE	REVISIONS	APP.

NOTICE:

FOR YOUR SAFETY, YOU ARE REQUIRED BY TEXAS LAW TO CALL 811 AT LEAST 48 HOURS BEFORE YOU DIG SO THAT UNDERGROUND LINES CAN BE MARKED. THIS SIGNATURE DOES NOT FULFILL YOUR OBLIGATION TO CALL 811

VERIFICATION OF PRIVATE UTILITY LINES

Date:

CenterPoint Energy natural gas utilities shown.
(Gas services lines are not shown). This signature not to be used for conflict verification.
Signature Valid for six months.

Date:

CenterPoint Energy / UNDERGROUND Electrical Facilities Verification ONLY.
(This Signature verifies existing underground facilities - not to be used for conflict verification.)
Signature Valid for six months.

Date:

Approved for AT&T Texas / SWBT underground conduit facilities only.
Signature valid for one year.

QUIDDITY
Texas Board of Professional Engineers and Land Surveyors Reg. No. F-23290
6330 West Loop South, Suite 150 • Bellaire, TX 77401 • 713.777.5337

JOB NO: 00050-0099-01 DATE: 1/19/2026

APPROVED BY:

DATE: MAY 2026

DESIGNED BY: JK

DRAWN BY: JLG

SURVEYED BY:

FB NO. XXXXXX

INTERIM REVIEW
Not intended for construction, bidding or permit purposes.
Engineer: LAUREN J. MUDD, P.E.
P.E. Serial No.: 153971
Date: MAY 2026

CITY OF HOUSTON
HOUSTON PUBLIC WORKS

SCOTT STREET NO. 1
LIFT STATION REHABILITATION
CIVIL

CIVIL DETAILS
SHEET 14 OF 16

WBS NUMBER
R-000267-127A-4
DRAWING SCALE
AS NOTED
CITY OF HOUSTON PM
TAHA LOTIA
DWG NO. **O-C-35**
SHEET NO. 43 OF 220

FOR CITY OF HOUSTON USE ONLY

K:\00050\00050-0099-01 Scott St. No. 1 Lift Station Rehabilitation - Phase II Design\2 Design Phase\CAD\SITE\Plans\00050-0099-01 CIVIL SHEETS.dwg

ORIGINAL SCALE IN INCHES FOR REDUCED PLANS

NO.	DATE	REVISIONS	APP.

NOTICE:
FOR YOUR SAFETY, YOU ARE REQUIRED BY TEXAS LAW TO CALL 811 AT LEAST 48 HOURS BEFORE YOU DIG SO THAT UNDERGROUND LINES CAN BE MARKED. THIS SIGNATURE DOES NOT FULFILL YOUR OBLIGATION TO CALL 811

VERIFICATION OF PRIVATE UTILITY LINES

Date:

CenterPoint Energy natural gas utilities shown.
(Gas services lines are not shown). This signature not to be used for conflict verification.
Signature Valid for six months.

Date:

CenterPoint Energy / UNDERGROUND Electrical Facilities Verification ONLY.
(This Signature verifies existing underground facilities - not to be used for conflict verification.)
Signature Valid for six months.

Date:

Approved for AT&T Texas / SWBT underground conduit facilities only.
Signature valid for one year.

QUIDDITY
Texas Board of Professional Engineers and Land Surveyors Reg. No. F-23290
6330 West Loop South, Suite 150 • Bellaire, TX 77401 • 713.777.5337

JOB NO: 00050-0099-01 DATE: 1/19/2026

APPROVED BY:

DATE: MAY 2026

DESIGNED BY: JK

DRAWN BY: JLG

SURVEYED BY:

FB NO. XXXXXX

INTERIM REVIEW
Not intended for construction, bidding or permit purposes.
Engineer: LAUREN J. MUDD, P.E.
P.E. Serial No.: 153971
Date: MAY 2026

CITY OF HOUSTON
HOUSTON PUBLIC WORKS

SCOTT STREET NO. 1 LIFT STATION REHABILITATION
CIVIL

CIVIL DETAILS SHEET 15 OF 16

WBS NUMBER	FOR CITY OF HOUSTON USE ONLY
R-000267-127A-4	
DRAWING SCALE	
AS NOTED	
CITY OF HOUSTON PM	
TAHA LOTIA	
DWG NO. **0-C-36**	
SHEET NO. 44 OF 220	

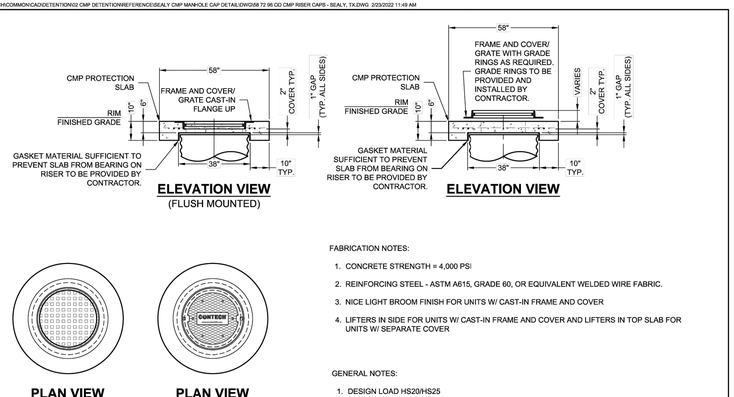

PLAN VIEW
(GRATED CASTING)
30"Ø HS25 LOAD RATED

PLAN VIEW
(SOLID CASTING)
24"Ø HS25 LOAD RATED
30"Ø HS25 LOAD RATED

FABRICATION NOTES:

1. CONCRETE STRENGTH = 4,000 PSI
2. REINFORCING STEEL - ASTM A615, GRADE 60, OR EQUIVALENT WELDED WIRE FABRIC.
3. NICE LIGHT BROOM FINISH FOR UNITS W/ CAST-IN FRAME AND COVER
4. LIFTERS IN SIDE FOR UNITS W/ CAST-IN FRAME AND COVER AND LIFTERS IN TOP SLAB FOR UNITS W/ SEPARATE COVER

GENERAL NOTES:

1. DESIGN LOAD HS20/HS25
2. EARTH COVER = 1' MAX
3. RISER CAP MUST BE ADEQUATELY SUPPORTED WITH PROPER BEDDING AND BEARING PRESSURE OF 3350 PSF AS TO NOT TRANSFER LOADS ONTO RISER.
4. HEAVY PICK WEIGHT = 1,900 LBS

CONTECH ENGINEERED SOLUTIONS LLC
www.ContechES.com
9025 Centre Pointe Dr., Suite 400, West Chester, OH 45069
800-338-1122 513-645-7000 513-645-7993 FAX

58" OD CMP RISER CAP
UP TO 36" RISERS
PRECASTER: SEALY, TX

CONTECH CMP DETENTION SYSTEMS

DATE: 04/07/2021	SCALE: NONE	PROJECT No.:	SEQUENCE No.:	DRAWN: TJS	CHECKED: KMR

CMP DETENTION INSTALLATION GUIDE

PROPER INSTALLATION OF A FLEXIBLE UNDERGROUND DETENTION SYSTEM WILL ENSURE LONG-TERM PERFORMANCE. THE CONFIGURATION OF THESE SYSTEMS OFTEN REQUIRES SPECIAL CONSTRUCTION PRACTICES THAT DIFFER FROM CONVENTIONAL FLEXIBLE PIPE CONSTRUCTION. CONTECH ENGINEERED SOLUTIONS STRONGLY SUGGESTS SCHEDULING A PRE-CONSTRUCTION MEETING WITH YOUR LOCAL SALES ENGINEER TO DETERMINE IF ADDITIONAL MEASURES, NOT COVERED IN THIS GUIDE, ARE APPROPRIATE FOR YOUR SITE.

FOUNDATION

CONSTRUCT A FOUNDATION THAT CAN SUPPORT THE DESIGN LOADING APPLIED BY THE PIPE AND ADJACENT BACKFILL WEIGHT AS WELL AS MAINTAIN ITS INTEGRITY DURING CONSTRUCTION.

IF SOFT OR UNSUITABLE SOILS ARE ENCOUNTERED, REMOVE THE POOR SOILS DOWN TO A SUITABLE DEPTH AND THEN BUILD UP TO THE APPROPRIATE ELEVATION WITH A COMPETENT BACKFILL MATERIAL. THE STRUCTURAL FILL MATERIAL GRADATION SHOULD NOT ALLOW THE MIGRATION OF FINES, WHICH CAN CAUSE SETTLEMENT OF THE DETENTION SYSTEM OR PAVEMENT ABOVE. IF THE STRUCTURAL FILL MATERIAL IS NOT COMPATIBLE WITH THE UNDERLYING SOILS AN ENGINEERING FABRIC SHOULD BE USED AS A SEPARATOR. IN SOME CASES, USING A STIFF REINFORCING GEOGRID REDUCES OVER EXCAVATION AND REPLACEMENT FILL QUANTITIES.

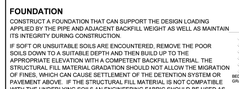

GRADE THE FOUNDATION SUBGRADE TO A UNIFORM OR SLIGHTLY SLOPING GRADE. IF THE SUBGRADE IS CLAY OR RELATIVELY NON-POROUS AND THE CONSTRUCTION SEQUENCE WILL LAST FOR AN EXTENDED PERIOD OF TIME, IT IS BEST TO SLOPE THE GRADE TO ONE END OF THE SYSTEM. THIS WILL ALLOW EXCESS WATER TO DRAIN QUICKLY, PREVENTING SATURATION OF THE SUBGRADE.

GEOMEMBRANE BARRIER

A SITE'S RESISTIVITY MAY CHANGE OVER TIME WHEN VARIOUS TYPES OF SALTING AGENTS ARE USED, SUCH AS ROAD SALTS FOR DEICING AGENTS. IF SALTING AGENTS ARE USED ON OR NEAR THE PROJECT SITE, A GEOMEMBRANE BARRIER IS RECOMMENDED WITH THE SYSTEM. THE GEOMEMBRANE LINER IS INTENDED TO HELP PROTECT THE SYSTEM FROM THE POTENTIAL ADVERSE EFFECTS THAT MAY RESULT FROM THE USE OF SUCH AGENTS INCLUDING PREMATURE CORROSION AND REDUCED ACTUAL SERVICE LIFE.

THE PROJECT'S ENGINEER OF RECORD IS TO EVALUATE WHETHER SALTING AGENTS WILL BE USED ON OR NEAR THE PROJECT SITE, AND USE HIS/HER BEST JUDGEMENT TO DETERMINE IF ANY ADDITIONAL PROTECTIVE MEASURES ARE REQUIRED. BELOW IS A TYPICAL DETAIL SHOWING THE PLACEMENT OF A GEOMEMBRANE BARRIER FOR PROJECTS WHERE SALTING AGENTS ARE USED ON OR NEAR THE PROJECT SITE.

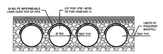

IN-SITU TRENCH WALL

IF EXCAVATION IS REQUIRED, THE TRENCH WALL NEEDS TO BE CAPABLE OF SUPPORTING THE LOAD THAT THE PIPE SHEDS AS THE SYSTEM IS LOADED. IF SOILS ARE NOT CAPABLE OF SUPPORTING THESE LOADS, THE PIPE CAN DEFLECT. PERFORM A SIMPLE SOIL PRESSURE CHECK USING THE APPLIED LOADS TO DETERMINE THE LIMITS OF EXCAVATION BEYOND THE SPRING LINE OF THE OUTER MOST PIPES.

IN MOST CASES THE REQUIREMENTS FOR A SAFE WORK ENVIRONMENT AND PROPER BACKFILL PLACEMENT AND COMPACTION TAKE CARE OF THIS CONCERN.

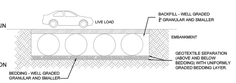

BACKFILL PLACEMENT

MATERIAL SHALL BE WORKED INTO THE PIPE HAUNCHES BY MEANS OF SHOVEL-SLICING, RODDING, AIR TAMPER, VIBRATORY ROD, OR OTHER EFFECTIVE METHODS.

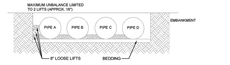

IF AASHTO T99 PROCEDURES ARE DETERMINED INFEASIBLE BY THE GEOTECHNICAL ENGINEER OF RECORD, COMPACTION IS CONSIDERED ADEQUATE WHEN NO FURTHER YIELDING OF THE MATERIAL IS OBSERVED UNDER THE COMPACTOR, OR UNDER FOOT, AND THE GEOTECHNICAL ENGINEER OF RECORD (OR REPRESENTATIVE THEREOF) IS SATISFIED WITH THE LEVEL OF COMPACTION.

FOR LARGE SYSTEMS, CONVEYOR SYSTEMS, BACKHOES WITH LONG REACHES OR DRAGLINES WITH STONE BUCKETS MAY BE USED TO PLACE BACKFILL. ONCE MINIMUM COVER FOR CONSTRUCTION LOADING ACROSS THE ENTIRE WIDTH OF THE SYSTEM IS REACHED, ADVANCE THE EQUIPMENT TO THE END OF THE RECENTLY PLACED FILL, AND BEGIN THE SEQUENCE AGAIN UNTIL THE SYSTEM IS COMPLETELY BACKFILLED. THIS TYPE OF CONSTRUCTION SEQUENCE PROVIDES ROOM FOR STOCKPILED BACKFILL DIRECTLY BEHIND THE BACKHOE, AS WELL AS THE MOVEMENT OF CONSTRUCTION TRAFFIC. MATERIAL STOCKPILES ON TOP OF THE BACKFILLED DETENTION SYSTEM SHOULD BE LIMITED TO 8- TO 10-FEET HIGH AND MUST PROVIDE BALANCED LOADING ACROSS ALL BARRELS. TO DETERMINE THE PROPER COVER OVER THE PIPES TO ALLOW THE MOVEMENT OF CONSTRUCTION EQUIPMENT SEE TABLE 1, OR CONTACT YOUR LOCAL CONTECH SALES ENGINEER.

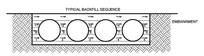

WHEN FLOWABLE FILL IS USED, YOU MUST PREVENT PIPE FLOATATION TYPICALLY, SMALL LIFTS ARE PLACED BETWEEN THE PIPES AND THEN ALLOWED TO SET-UP PRIOR TO THE PLACEMENT OF THE NEXT LIFT. THE ALLOWABLE THICKNESS OF THE CLSM LIFT IS A FUNCTION OF A PROPER BALANCE BETWEEN THE UPLIFT FORCE OF THE CLSM, THE OPPOSING WEIGHT OF THE PIPE, AND THE EFFECT OF OTHER RESTRAINING MEASURES. THE PIPE CAN CARRY LIMITED FLUID PRESSURE WITHOUT PIPE DISTORTION OR DISPLACEMENT, WHICH ALSO AFFECTS THE CLSM LIFT THICKNESS. YOUR LOCAL CONTECH SALES ENGINEER CAN HELP DETERMINE THE PROPER LIFT THICKNESS.



CONSTRUCTION LOADING

TYPICALLY, THE MINIMUM COVER SPECIFIED FOR A PROJECT ASSUMES H-20 LIVE LOAD. BECAUSE CONSTRUCTION LOADS OFTEN EXCEED DESIGN LIVE LOADS, INCREASED TEMPORARY MINIMUM COVER REQUIREMENTS ARE NECESSARY. SINCE CONSTRUCTION EQUIPMENT VARIES FROM JOB TO JOB, IT IS BEST TO ADDRESS EQUIPMENT SPECIFIC MINIMUM COVER REQUIREMENTS WITH YOUR LOCAL CONTECH SALES ENGINEER DURING YOUR PRE-CONSTRUCTION MEETING.

ADDITIONAL CONSIDERATIONS

BECAUSE MOST SYSTEMS ARE CONSTRUCTED BELOW-GRADE, RAIN FALL CAN RAPIDLY FILL THE EXCAVATION, POTENTIALLY CAUSING FLOATATION AND MOVEMENT OF THE PREVIOUSLY PLACED PIPES. TO HELP MITIGATE POTENTIAL PROBLEMS, IT IS BEST TO START THE INSTALLATION AT THE DOWNSTREAM END WITH THE OUTLET ALREADY CONSTRUCTED TO ALLOW A ROUTE FOR THE WATER TO ESCAPE. TEMPORARY DIVERSION MEASURES MAY BE REQUIRED FOR HIGH FLOWS DUE TO THE RESTRICTED NATURE OF THE OUTLET PIPE.

CMP DETENTION SYSTEM INSPECTION AND MAINTENANCE

UNDERGROUND STORMWATER DETENTION AND INFILTRATION SYSTEMS MUST BE INSPECTED AND MAINTAINED AT REGULAR INTERVALS FOR PURPOSES OF PERFORMANCE AND LONGEVITY.

INSPECTION

INSPECTION IS THE KEY TO EFFECTIVE MAINTENANCE OF CMP DETENTION SYSTEMS AND IS EASILY PERFORMED. CONTECH RECOMMENDS ONGOING, ANNUAL INSPECTIONS. SITES WITH HIGH TRASH LOAD OR SMALL OUTLET CONTROL ORIFICES MAY NEED MORE FREQUENT INSPECTIONS. THE RATE AT WHICH THE SYSTEM COLLECTS POLLUTANTS WILL DEPEND MORE ON SITE SPECIFIC ACTIVITIES RATHER THAN THE SIZE OR CONFIGURATION OF THE SYSTEM.

INSPECTIONS SHOULD BE PERFORMED MORE OFTEN IN EQUIPMENT WASHDOWN AREAS, IN CLIMATES WHERE SANDING AND/OR SALTING OPERATIONS TAKE PLACE, AND IN OTHER VARIOUS INSTANCES IN WHICH ONE WOULD EXPECT HIGHER ACCUMULATIONS OF SEDIMENT OR ABRASIVE/CORROSIVE CONDITIONS. A RECORD OF EACH INSPECTION IS TO BE MAINTAINED FOR THE LIFE OF THE SYSTEM

MAINTENANCE

CMP DETENTION SYSTEMS SHOULD BE CLEANED WHEN AN INSPECTION REVEALS ACCUMULATED SEDIMENT OR TRASH IS CLOGGING THE DISCHARGE ORIFICE.

ACCUMULATED SEDIMENT AND TRASH CAN TYPICALLY BE EVACUATED THROUGH THE MANHOLE OVER THE OUTLET ORIFICE. IF MAINTENANCE IS NOT PERFORMED AS RECOMMENDED, SEDIMENT AND TRASH MAY ACCUMULATE IN FRONT OF THE OUTLET ORIFICE. MANHOLE COVERS SHOULD BE SECURELY SEATED FOLLOWING CLEANING ACTIVITIES. CONTECH SUGGESTS THAT ALL SYSTEMS BE DESIGNED WITH AN ACCESS/INSPECTION MANHOLE SITUATED AT OR NEAR THE INLET AND THE OUTLET ORIFICE. SHOULD IT BE NECESSARY TO GET INSIDE THE SYSTEM TO PERFORM MAINTENANCE ACTIVITIES, ALL APPROPRIATE PRECAUTIONS REGARDING CONFINED SPACE ENTRY AND OSHA REGULATIONS SHOULD BE FOLLOWED.

ANNUAL INSPECTIONS ARE BEST PRACTICE FOR ALL UNDERGROUND SYSTEMS. DURING THIS INSPECTION, IF EVIDENCE OF SALTING/DE-ICING AGENTS IS OBSERVED WITHIN THE SYSTEM, IT IS BEST PRACTICE FOR THE SYSTEM TO BE RINSED, INCLUDING ABOVE THE SPRING LINE SOON AFTER THE SPRING THAW AS PART OF THE MAINTENANCE PROGRAM FOR THE SYSTEM.

MAINTAINING AN UNDERGROUND DETENTION OR INFILTRATION SYSTEM IS EASIEST WHEN THERE IS NO FLOW ENTERING THE SYSTEM. FOR THIS REASON, IT IS A GOOD IDEA TO SCHEDULE THE CLEANOUT DURING DRY WEATHER.

THE FOREGOING INSPECTION AND MAINTENANCE EFFORTS HELP ENSURE UNDERGROUND PIPE SYSTEMS USED FOR STORMWATER STORAGE CONTINUE TO FUNCTION AS INTENDED BY IDENTIFYING RECOMMENDED REGULAR INSPECTION AND MAINTENANCE PRACTICES. INSPECTION AND MAINTENANCE RELATED TO THE STRUCTURAL INTEGRITY OF THE PIPE OR THE SOUNDNESS OF PIPE JOINT CONNECTIONS IS BEYOND THE SCOPE OF THIS GUIDE.

© CONTECH ENGINEERED SOLUTIONS LLC - THE CONTECH CONSTRUCTION PRODUCTS DRAWINGS, DETAILS AND DESIGNS ARE PROPRIETARY, COPYRIGHTED MATERIALS OF CONTECH AND MAY NOT BE USED IN ANY MANNER WITHOUT EXPRESS WRITTEN CONSENT FROM CONTECH. USE OF ANY CONTECH PRODUCT DRAWING IN ANY MANNER IS SUBJECT TO THE TERMS AND CONDITIONS OF THE CONTECH QUOTATION AND/OR PURCHASE AGREEMENT.

The design and information shown on this drawing is provided as a service to the project owner, engineer and contractor by CONTECH Engineered Solutions LLC ("CONTECH"). The use of this drawing, not any part hereof, may be used, reproduced or modified in any manner or form without prior written permission of CONTECH. Failure to comply is done at the user's own risk and CONTECH expressly disclaims any liability or responsibility for such use.

If discrepancies between the supplied information and actual field conditions are encountered, it is the responsibility of the user to notify CONTECH before commencing or continuing any work. CONTECH shall assume no responsibility for the accuracy of user-supplied field measurements and/or other user-supplied information.

DATE	REVISION DESCRIPTION	BY

CONTECH ENGINEERED SOLUTIONS LLC
www.ContechES.com
9025 Centre Pointe Dr., Suite 400, West Chester, OH 45069
800-338-1122 513-645-7000 513-645-7993 FAX

CONTECH CMP DETENTION SYSTEMS
CONTECH DYDOS DRAWING

XFILTRATION RETENTION SYSTEM DETAILS

PROJECT No.:	REQ. No.:	DATE:
DESIGNED: DYD	DRAWN: DYD	
CHECKED: DYD	APPROVED: DYD	
SHEET NO.:		

K:\00050\00050-0099-01 Scott St. No. 1 Lift Station Rehabilitation - Phase II Design\2 Design Phase\CAD\SITE\Plans\00050-0099-01 CIVIL SHEETS.dwg

ORIGINAL SCALE IN INCHES FOR REDUCED PLANS

NO.	DATE	REVISIONS	APP.

02081-05

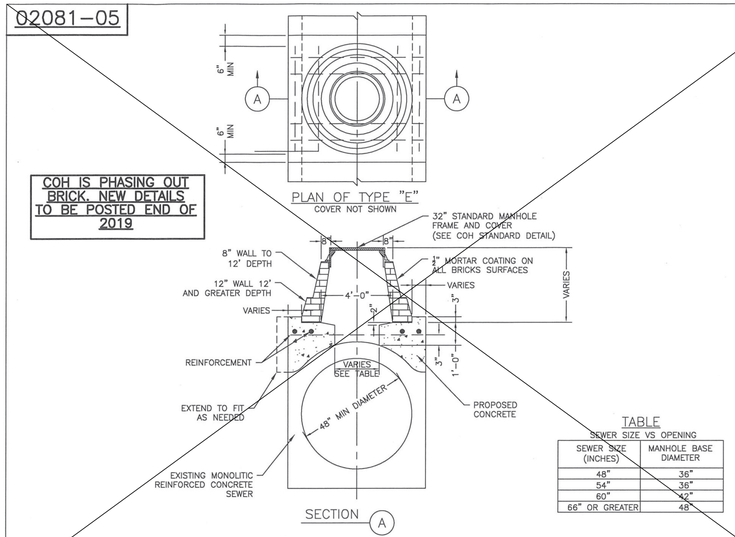

COH IS PHASING OUT BRICK. NEW DETAILS TO BE POSTED END OF 2019

TABLE
SEWER SIZE VS OPENING

SEWER SIZE (INCHES)	MANHOLE BASE DIAMETER
48"	36"
54"	36"
60"	42"
66" OR GREATER	48"

STORM SEWER MANHOLE TYPE 'E' FOR EXISTING MONOLITIC REINFORCED CONCRETE 48" DIAMETER AND GREATER
NTS

02081-06

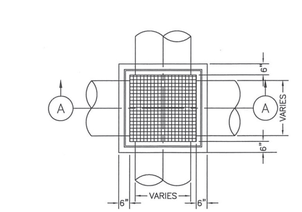

JUNCTION BOX DETAIL

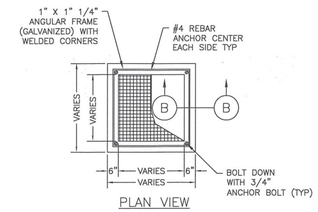

LID FRAME DETAIL

NOTES:

1. DETAIL TO BE USED WHERE STORM SEWER SIZE IS 24" DIA OR LESS.
2 FOR SEWER GREATER 24" DIA USE TYPE 'C' MANHOLE.

NOTES TO SPECIFIER:

1. WALL TO BE 6" CONCRETE
2. NOT TO BE USED IN STREET. FOR AREA BETWEEN CURB AND PROPERTY LINE ONLY.

STORM SEWER
JUNCTION BOX WITH LID OR GRATE TOP
FOR MAXIMUM OF 24" DIAMETER STORM SEWE4R5
NTS

02081-07

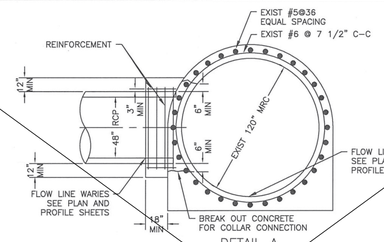

DETAIL A

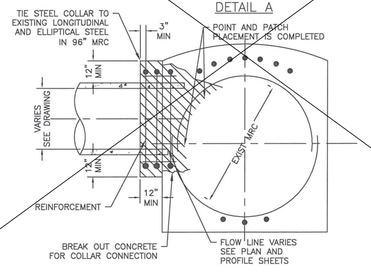

CONCRETE COLLAR DETAIL

NOTES:

1. HOLE CUT IN WALL OF 120" MRC TO BE NEAT AND DONE IN WORKMAN LIKE MANNER.
2. THE STEEL COLLAR TO EXIST LONGITUDINAL AND ELLIPTICAL STEEL WHERE APPLICABLE.
3. CONCRETE COLLAR SHALL BE CONSTRUCTED AT EACH CONNECTION OF A PROPOSED RCP TO AN EXISTING MRC. HOLE CUT IN WALL OF EXISTING 96" MRC TO BE NEAT AND DONE IN WORKMAN LIKE MANNER.

LATERAL CONNECTION TO EXISTING MONOLITHIC REINFORCED CONCRETE STORM SEWER
NTS

02081-08

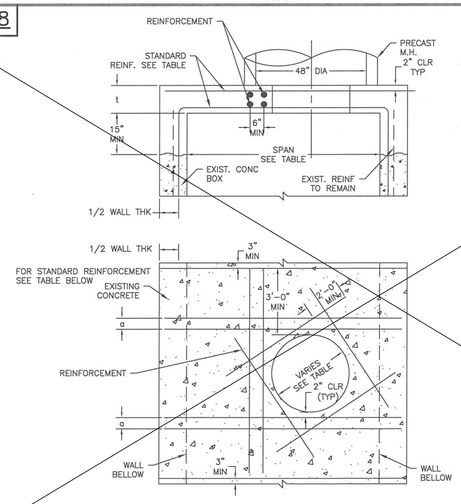

PROPOSED MANHOLE ON EXISTING BOX STORM SEWER
NTS

FIRM INFORMATION | ENGINEER'S SEAL

CITY OF HOUSTON
HOUSTON PUBLIC WORKS

STORM SEWER
02081-05 THROUGH 08

APPROVED BY: CITY ENGINEER | APPROVED BY: DEPUTY DIRECTOR

APPROVED BY: DIRECTOR

EFFECTIVE DATE: JUL-01-2019

FOR CITY OF HOUSTON USE ONLY

SHEET NO.

NOTICE:

FOR YOUR SAFETY, YOU ARE REQUIRED BY TEXAS LAW TO CALL 811 AT LEAST 48 HOURS BEFORE YOU DIG SO THAT UNDERGROUND LINES CAN BE MARKED. THIS SIGNATURE DOES NOT FULFILL YOUR OBLIGATION TO CALL 811

VERIFICATION OF PRIVATE UTILITY LINES

Date:

CenterPoint Energy natural gas utilities shown.
(Gas services lines are not shown). This signature not to be used for conflict verification.
Signature Valid for six months.

Date:

CenterPoint Energy / UNDERGROUND Electrical Facilities Verification ONLY.
(This Signature verifies existing underground facilities - not to be used for conflict verification.)
Signature Valid for six months.

Date:

Approved for AT&T Texas / SWBT underground conduit facilities only.
Signature valid for one year.

QUIDDITY
Texas Board of Professional Engineers and Land Surveyors Reg. No. F-23290
6330 West Loop South, Suite 150 • Bellaire, TX 77401 • 713.777.5337

JOB NO: 00050-0099-01 DATE: 1/19/2026

APPROVED BY:

DATE: MAY 2026

DESIGNED BY: JK

DRAWN BY: JLG

SURVEYED BY:

FB NO. XXXXXX

INTERIM REVIEW
Not intended for construction, bidding or permit purposes.
Engineer: LAUREN J. MUDD, P.E.
P.E. Serial No.: 153971
Date: MAY 2026

CITY OF HOUSTON
HOUSTON PUBLIC WORKS

SCOTT STREET NO. 1
LIFT STATION REHABILITATION
CIVIL

CIVIL DETAILS SHEET 16 OF 16

WBS NUMBER	FOR CITY OF HOUSTON USE ONLY
R-000267-127A-4	
DRAWING SCALE	
AS NOTED	
CITY OF HOUSTON PM	
TAHA LOTIA	
DWG NO. **0-C-37**	
SHEET NO. 45 OF 220	

K:\00050\00050-0099-01 Scott St. No. 1 Lift Station Rehabilitation - Phase II Design\2 Design Phase\CAD\SITE\Plans\00050-0099-01 CIVIL SHEETS.dwg

0 1 2 3 4 5 ORIGINAL SCALE IN INCHES FOR REDUCED PLANS

CITY OF HOUSTON PUBLIC WORKS SWPPP CONSTRUCTION NOTES:

1. CONTRACTOR SHALL IMPLEMENT INLET PROTECTION DEVICES AND REINFORCED FILTER FABRIC BARRIER ALONG ROAD AND SIDE DITCHES AT LOCATIONS SHOWN ON THE TYPICAL STORM WATER POLLUTION PREVENTION (SWPP) PLANS TO KEEP SILT AND OR EXCAVATED MATERIALS FROM ENTERING INTO THE STORM WATER INLETS AND DITCHES EVENTUALLY POLLUTING THE RECEIVING STORM.
2. DURING THE EXCAVATION PHASE OF THE PROJECT, CONTRACTOR SHALL SCHEDULE THE WORK IN SHORT SEGMENTS SO THAT EXCAVATION MATERIAL CAN BE QUICKLY HAULED AWAY FROM THE SITE AND TO PREVENT IT FROM STAYING UNCOLLECTED ON THE EXISTING PAVEMENT. ANY LOOSE EXCAVATED MATERIAL WHICH FALLS ON PAVEMENTS OR DRIVEWAYS SHALL BE SWEPT BACK INTO THE EXCAVATED AREA.
3. CONTRACTOR SHALL CLEAN UP THE EXISTING STREET INTERSECTIONS AND DRIVEWAYS DAILY, AS NECESSARY, TO REMOVE ANY EXCESS MUD, SILT OR ROCK TRACKED FORM THE EXCAVATED AREA.
4. CONTRACTOR SHALL FOLLOW GOOD HOUSEKEEPING PRACTICES DURING THE CONSTRUCTION OF THE PROJECT, ALWAYS CLEANING UP DIRT AND LOOSE MATERIAL AS CONSTRUCTION PROGRESSES.
5. CONTRACTOR TO INSPECT AND MAINTAIN THE AREAS LISTED BELOW AT LEAST ONCE EVERY FOURTEEN (14) CALENDAR DAYS AND WITHIN 24 HOURS OF THE END OF A STORM EVENT OF 0.5 INCHES OR GREATER.
   - DISTURBED AREAS OF THE CONSTRUCTION SITE THAT HAVE NOT BEEN FINALLY STABILIZED.
   - AREAS USED FOR STORAGE OF MATERIALS THAT ARE EXPOSED TO PRECIPITATION.
   - STRUCTURAL CONTROL MEASURES.
   - LOCATIONS WHERE VEHICLES ENTER OR EXIT THE SITE.
6. CONTRACTOR TO BE RESPONSIBLE TO MAINTAIN EXISTING DITCHES AND OR CULVERTS FOR UNOBSTRUCTED DRAINAGE AT ALL TIMES. WHERE SODDING IS DISTURBED BY EXCAVATION ON BACKFILLING OPERATIONS, SUCH AREAS SHALL BE REPLACED BY SEEDING OR SODDING. SLOPES 4:1 OR STEEPER SHALL BE REPLACED BY BLOCK SODDING.
7. CONTRACTOR SHALL PERFORM DAILY CLEANUP OF ALL DIRT, DEBRIS, SCRAP MATERIALS AND OTHER DISPOSABLE ITEMS RESULTING FROM CONTRACTOR'S OPERATIONS, WHETHER ON-SITE OR OFF-SITE. UNLESS OTHERWISE AUTHORIZED IN WRITING BY DIRECTOR, CONTRACTOR SHALL KEEP ALL STREETS, ACCESS STREETS, DRIVEWAYS, AREAS OF PUBLIC ACCESS, WALKWAYS, AND OTHER DESIGNATED AREAS CLEAN AND OPEN AT ALL TIMES PER GENERAL CONDITIONS 00700.

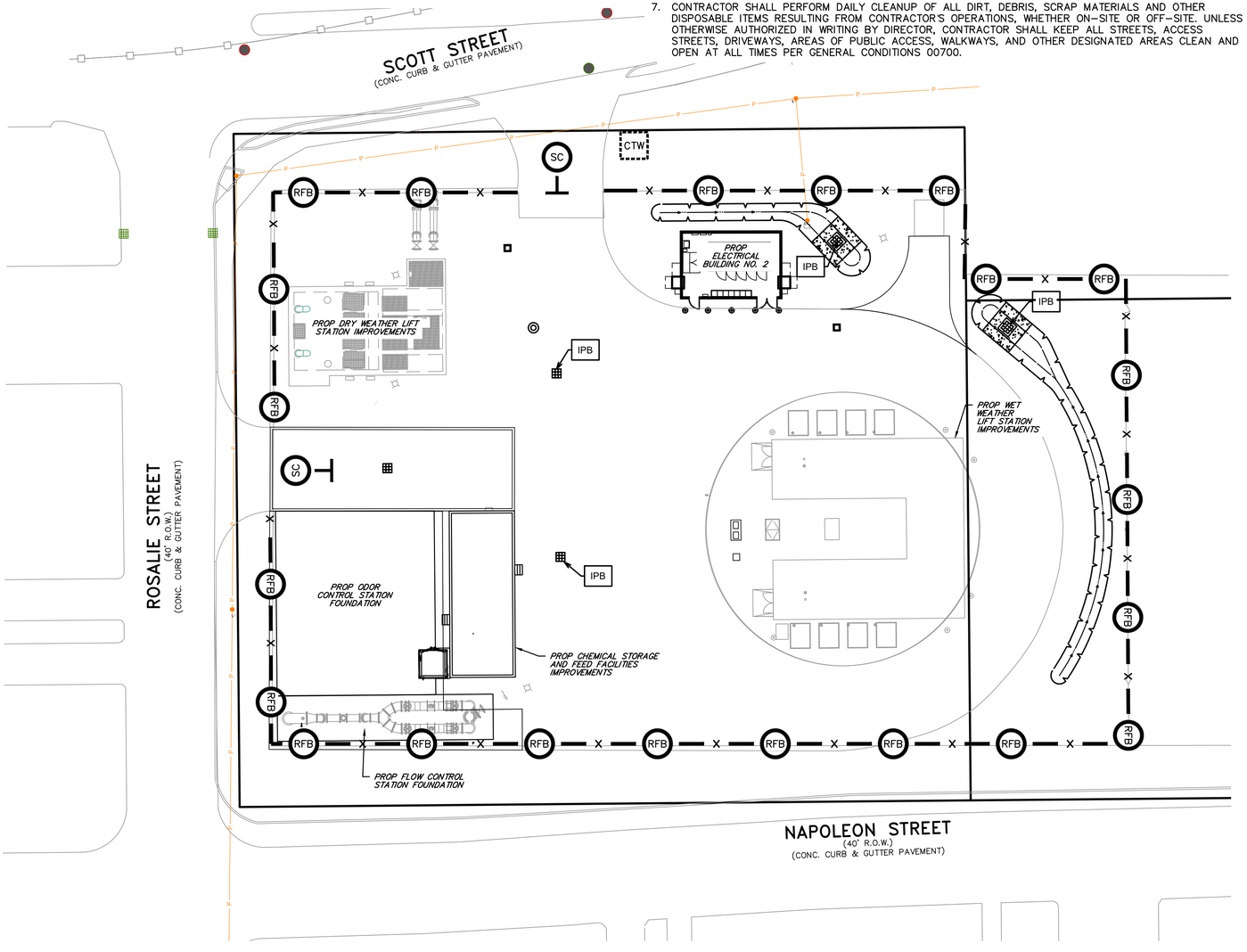

LEGEND

- CTW — CONCRETE TRUCK WASHOUT
- X — RFB — X — REINFORCED FILTER FABRIC BARRIER
- IPB — INLET PROTECTION BARRIER FOR STAGE II INLETS
- SC — STABILIZED CONSTRUCTION ENTRANCE
- PROPERTY LINE

NOTES:

1. SEE SHEET 0-C-33 FOR COH SWPPP DETAILS.

NO.	DATE	REVISIONS	APP.

0 5 10 20 40 60
SCALE: 1" = 20'

BENCH MARK
A BRASS DISC STAMPED "RM 070215" LOCATED AT THE END OF YAUPON HOLLY LANE AT ITS INTERSECTION WITH EASTERN REDBUD LANE, ON TOP OF A "B-B" INLET AT THE NORTHWEST CORNER OF THE INTERSECTION.
ELEVATION = 64.76 FEET NAVD 88 (2001 ADJUSTMENT)

T.B.M. "A"
A CHISELED SQUARE ON THE BULL NOSE OF THE ESPLANADE LOCATED ON WEST LAKE HOUSTON PARKWAY APPROXIMATELY 970 FEET NORTH OF THE CENTERLINE INTERSECTION OF SUMMER LAKE RANCH DRIVE AND WEST LAKE HOUSTON PARKWAY.
ELEVATION = 55.34 FEET NAVD 88 (2001 ADJUSTMENT)

T.B.M. "B"
A CHISELED SQUARE ON TOP OF A "B-B" INLET AT THE SOUTHWEST CORNER OF THE INTERSECTION OF SUMMER LAKE RANCH DRIVE AND WEST LAKE HOUSTON PARKWAY.
ELEVATION = 53.67 FEET NAVD 88 (2001 ADJUSTMENT)

100-YEAR FLOOD PLAIN
ACCORDING TO MAP No. 48201C0510L OF THE FEDERAL EMERGENCY MANAGEMENT AGENCY'S (FEMA) FLOOD INSURANCE RATE MAP (FIRM) FOR HARRIS COUNTY, TEXAS AND INCORPORATED AREAS, DATED JUNE 18, 2007, THE SUBJECT TRACT IS SITUATED WITHIN UNSHADED ZONE "X"; DEFINED AS AREAS DETERMINED TO BE OUTSIDE THE 0.2% ANNUAL CHANCE FLOODPLAIN (500-YEAR FLOOD).

NOTICE:
FOR YOUR SAFETY, YOU ARE REQUIRED BY TEXAS LAW TO CALL 811 AT LEAST 48 HOURS BEFORE YOU DIG SO THAT UNDERGROUND LINES CAN BE MARKED. THIS SIGNATURE DOES NOT FULFILL YOUR OBLIGATION TO CALL 811

VERIFICATION OF PRIVATE UTILITY LINES

Date:
CenterPoint Energy natural gas utilities shown.
(Gas services lines are not shown). This signature not to be used for conflict verification.
Signature Valid for six months.

Date:
CenterPoint Energy / UNDERGROUND Electrical Facilities Verification ONLY.
(This Signature verifies existing underground facilities - not to be used for conflict verification.)
Signature Valid for six months.

Date:
Approved for AT&T Texas / SWBT underground conduit facilities only.
Signature valid for one year.

QUIDDITY
Texas Board of Professional Engineers and Land Surveyors Reg. No. F-23290
6330 West Loop South, Suite 150 • Bellaire, TX 77401 • 713.777.5337

JOB NO: 00050-0099-01 DATE: 1/19/2026

APPROVED BY:
DATE: MAY 2026
DESIGNED BY: JK
DRAWN BY: JLG
SURVEYED BY:
FB NO. XXXXXX

INTERIM REVIEW
Not intended for construction, bidding or permit purposes.
Engineer: LAUREN J. MUDD, P.E.
P.E. Serial No.: 153971
Date: MAY 2026

CITY OF HOUSTON
HOUSTON PUBLIC WORKS

SCOTT STREET NO. 1 LIFT STATION REHABILITATION
CIVIL

STORM WATER POLLUTION PREVENTION PLAN

WBS NUMBER	FOR CITY OF HOUSTON USE ONLY
R-000267-127A-4	
DRAWING SCALE	
AS NOTED	
CITY OF HOUSTON PM	
TAHA LOTIA	
DWG NO. **0-C-38**	
SHEET NO. 46 OF 220	

K:\00050\00050-0099-01 Scott St. No. 1 Lift Station Rehabilitation - Phase II Design\2 Design Phase\CAD\SITE\Plans\00050-0099-01 CIVIL SHEETS.dwg

0 1 2 3 4 5

ORIGINAL SCALE IN INCHES FOR REDUCED PLANS

SCALE: 1"= 20'

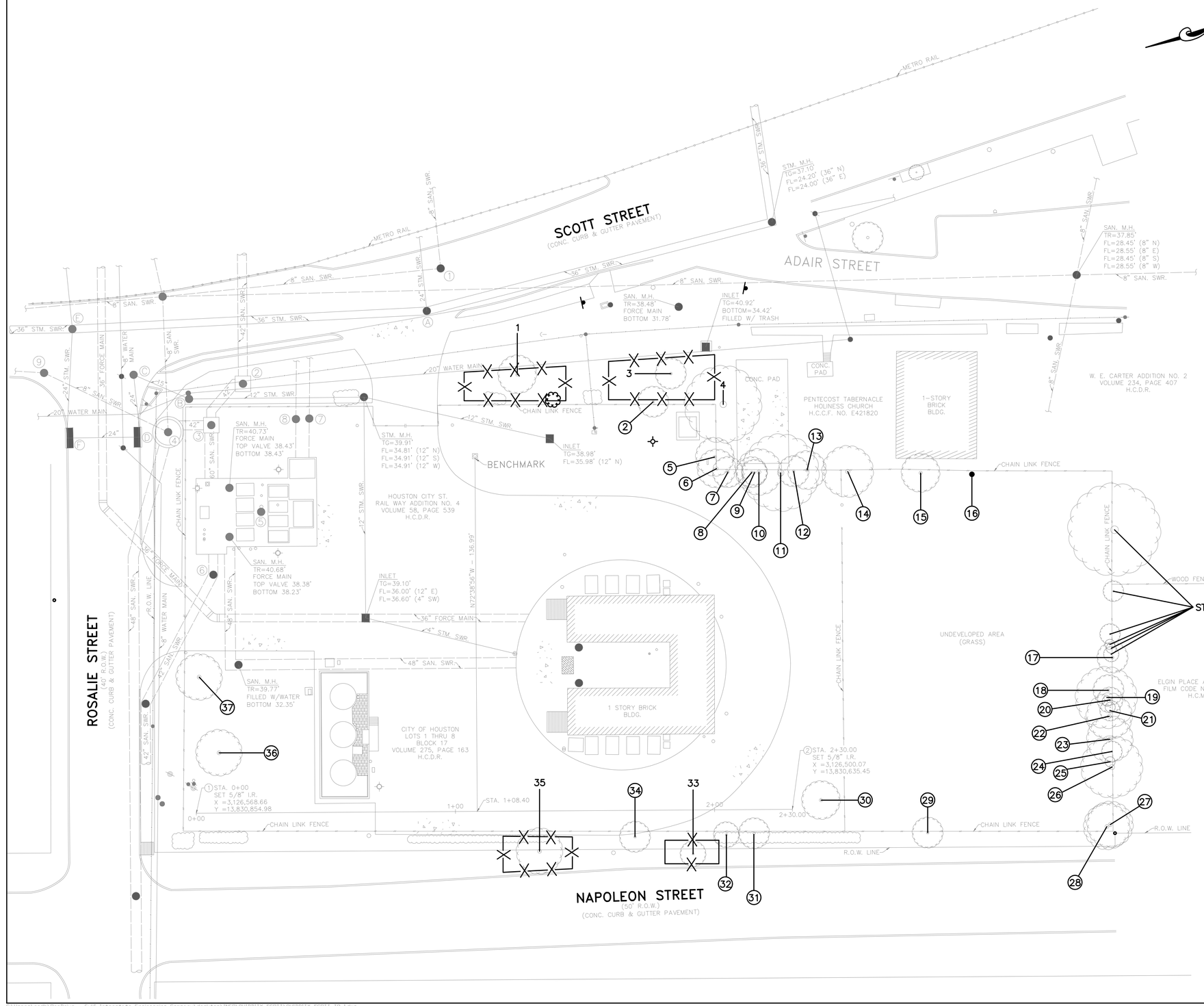

TREE PRESERVATION PLAN LEGEND

- 1 — TREE NUMBER/LOCATION
- (1) — TREE TO BE REMOVED
- —X—X— TREE PROTECTION FENCE

NO.	DATE	REVISIONS	APP.

C.N. Koehl
Urban Forestry, Inc.
210 Stone Bush Ct. ◦ Katy, Texas 77493
281-391-0022 ckoehl@koehlurbanforestry.com

APPROVED:

QUIDDITY
Texas Board of Professional Engineers and Land Surveyors Reg. No. F-23290
6330 West Loop South, Suite 150 • Bellaire, TX 77401 • 713.777.5337

CITY OF HOUSTON
HARRIS COUNTY, TEXAS

DATE: MARCH 2025
JOB NO: 00050-0099-01
DGN BY:
DWG BY:

NOTE: CITY SIGNATURES VALID FOR ONE YEAR ONLY AFTER DATE OF SIGNATURES

SCOTT STREET No. 1
LIFT STATION
REHABILITATION

TREE PROTECTION PLAN
SHEET 1 OF 2

CITY OF HOUSTON
HOUSTON PUBLIC WORKS

DRAWING SCALE HORIZ: 1"=20' VERT:

CATEGORY NO. . SHEET NO. 47 OF 220

FOR CITY OF HOUSTON USE ONLY

C:\Users\neala\OneDrive - Gulf Interstate Engineering Company\desktop\INFO\QUIDDITY SCOTT\QUIDDITY SCOTT TP-1.dwg

0 1 2 3 4 5 ORIGINAL SCALE IN INCHES FOR REDUCED PLANS

Tree Removal List

Tree No.	Location	Description	Replacement requirement
2	30100 Scott	17" Raintree	0
5	30100 Scott	14" Sugarberry	0
6	30100 Scott	11" Sugarberry	0
7	30100 Scott	13" Sugarberry	0
8	30100 Scott	8" Sugarberry	0
9	30100 Scott	6" Sugarberry	0
10	30100 Scott	10" Sugarberry	0
11	30100 Scott	17" Sugarberry	0
12	30100 Scott	13" Live Oak	0
13	30100 Scott	12" Sugarberry	0
14	30100 Scott	15" Catalpa	0
15	30100 Scott	14" Tallow	0
16	30100 Scott	9" Pecan	0
17	30100 Scott	11" Sugarberry	0
18	30100 Scott	11" Sugarberry	0
19	30100 Scott	17" Green Ash	0
20	30100 Scott	5" Sugarberry	0
21	30100 Scott	7" Green Ash	0
22	30100 Scott	19" Green Ash	0
23	30100 Scott	16" Green Ash	0
24	30100 Scott	11" Green Ash	0
25	30100 Scott	9" Green Ash	0
26	30100 Scott	17" Green Ash	0
27	30100 Scott	15" Green Ash	15
28	30100 Scott	16" Green Ash	16
29	30100 Scott	15" Sugarberry	0
30	30100 Scott	11" Bur Oak	11
31	30100 Scott	13" Sugarberry	0
32	30100 Scott	12" Chinaberry	0
34	30100 Scott	15" Chinaberry	0
36	30100 Scott	13" Bur Oak	13
37	30100 Scott	11" Bur Oak	11
		TOTAL REPLACEMENT INCHES REQUIRED	**66**

Tree Replacement List

Quantity	Caliper Size	Species	Container/Tree Spade size
		TOTAL REPLACEMENT INCHES INCLUDED IN PLAN	**0**

NOTE: Tree replacement locations are not shown on plans. Contractor must coordinate with City of Houston Urban Forestry and Houston Public Works prior to PURCHASING trees. This project may not have adequate room for all required replacement trees without creating regulatory sign or traffic/pedestrian visibility issues. Number of trees and planting locations will be determined by City of Houston Urban Forestry in construction phase. Trees that are planted are to be maintained and watered for 2 years following planting per standard spec 02915. Timing of planting may be delayed in periods of drought with mandatory water restrictions in place-timing to be coordinated with City of Houston Urban Forestry. Trees in esplanade groupings to be planted in common bed with 4" of hardwood mulch between trees.

Trees are to be maintained and watered for 2 years following planting per standard spec 02915. Timing of planting may be delayed in periods of drought with mandatory water restrictions in place-timing to be coordinated with City of Houston Urban Forestry.

Tree replacement locations shall comply with Houston Public Works spec sections 02811, 02911, 02912, 02915, 02921 & 02922. In general trees along sides of street right of ways shall be no closer than 3' to back of curb or 20' from another tree. Trees in medians shall be no closer than 6' back of curb, 75' from an intersection, 50' to a median cut, or 20' from another tree. Contractor to coordinate locations with City Forestry and HPW prior to PURCHASING trees. All replacement trees called out on plans may not be planted on project relative to coordination with listed parties.

Cash Allowance Due Parks from HPW for Balance of Mitigation Not Planted on Project

	Required Mitigation total	Mitigation rate/inch	
setback		$ 132.51	
0-5.99"		$ 302.12	$ -
6-11.99"	22	$ 503.55	$ 11,078.10
12" +	44	$ 671.40	$ 29,541.60
		TOTAL REQUIRED MITIGATION FEE	**$ 40,619.70**

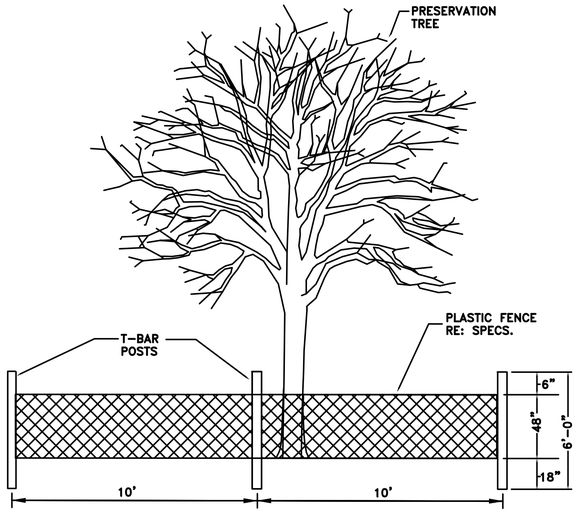

TREE PROTECTION FENCING DETAIL A
NOT TO SCALE

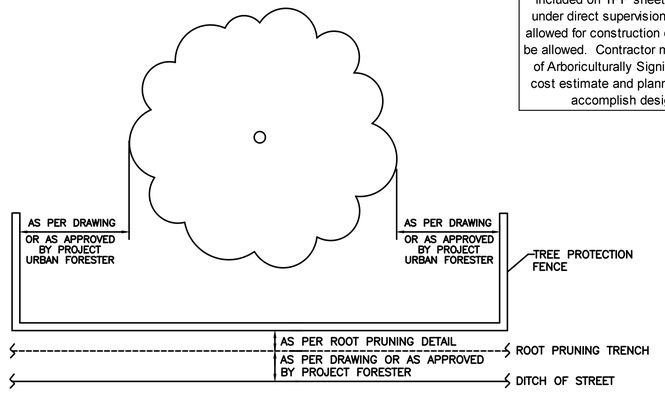

TREE PROTECTION FENCING DETAIL B
NOT TO SCALE

Arboriculturally Significant Tree List

Tree No.	Location	Description
4	30100 Scott	31" Tallow

Trees Identified by City of Houston Forestry/Parks & Recreation Department as Arboriculturally Significant are identified here and/or in treatment schedule included on TPP sheets. Arboriculturally Significant trees are to be pruned under direct supervision of City of Houston Forestry. Minimal pruning will be allowed for construction equipment access, and in some cases no pruning will be allowed. Contractor must review conditions around and/or under the canopy of Arboriculturally Significant trees and consider restrictions when preparing cost estimate and planning construction equipment that will be necessary to accomplish design installation with minimal to no tree pruning.

Tree No.	Location	Description	Chapter 33 Status	Comments	Treatment
Trees at Scott Street No. 1 Lift Station					
1	30100 Scott	16" Bur Oak	Protected		Fence
2	30100 Scott	17" Raintree	Not Protected	Growing in chain link fence, remove for fence replacement	Remove tree, no replacement/mitigation required
3	30100 Scott	17" Bur Oak	Protected		Fence
4	30100 Scott	31" Tallow	Protected	Adjacent property, Trunk cavity, Not impacted	
5	30100 Scott	14" Sugarberry	Protected	Poor condition, Growing in chain link fence, remove for fence replacement	Remove tree, no replacement/mitigation required
6	30100 Scott	11" Sugarberry	Protected	Poor condition, Growing in chain link fence, remove for fence replacement	Remove tree, no replacement/mitigation required
7	30100 Scott	13" Sugarberry	Protected	Dead, Growing in chain link fence, remove for fence replacement	Remove tree, no replacement/mitigation required
8	30100 Scott	8" Sugarberry	Protected	Dead, Growing in chain link fence, remove for fence replacement	Remove tree, no replacement/mitigation required
9	30100 Scott	6" Sugarberry	Protected	Dead, Growing in chain link fence, remove for fence replacement	Remove tree, no replacement/mitigation required
10	30100 Scott	10" Sugarberry	Protected	Dead, Growing in chain link fence, remove for fence replacement	Remove tree, no replacement/mitigation required
11	30100 Scott	17" Sugarberry	Protected	Poor condition, Multitrunked, Growing in chain link fence, remove for fence replacement	Remove tree, no replacement/mitigation required
12	30100 Scott	13" Live Oak	Protected	Poor condition, Growing in chain link fence, remove for fence replacement	Remove tree, no replacement/mitigation required
13	30100 Scott	12" Sugarberry	Protected	Poor condition, Growing in chain link fence, remove for fence replacement	Remove tree, no replacement/mitigation required
14	30100 Scott	15" Catalpa	Protected	Poor condition, Growing in chain link fence, remove for fence replacement	Remove tree, no replacement/mitigation required
15	30100 Scott	14" Tallow	Not Protected	Growing in chain link fence, remove for fence replacement	Remove tree, no replacement/mitigation required
16	30100 Scott	9" Pecan	Protected	Poor condition, Growing in chain link fence, remove for fence replacement	Remove tree, no replacement/mitigation required
17	30100 Scott	11" Sugarberry	Protected	Dead, Growing in chain link fence, remove for fence replacement	Remove tree, no replacement/mitigation required
18	30100 Scott	11" Sugarberry	Protected	Dead, Growing in chain link fence, remove for fence replacement	Remove tree, no replacement/mitigation required
19	30100 Scott	17" Green Ash	Protected	One sided by apartments, Growing in chain link fence, remove for fence replacement	Remove tree, no replacement/mitigation required
20	30100 Scott	5" Sugarberry	Protected	Growing in chain link fence, remove for fence replacement	Remove tree, no replacement/mitigation required
21	30100 Scott	7" Green Ash	Protected	Topped, Growing in chain link fence, remove for fence replacement	Remove tree, no replacement/mitigation required
22	30100 Scott	19" Green Ash	Protected	One sided by apartments, Growing in chain link fence, remove for fence replacement	Remove tree, no replacement/mitigation required
23	30100 Scott	16" Green Ash	Protected	Poor condition, Growing in chain link fence, remove for fence replacement	Remove tree, no replacement/mitigation required
24	30100 Scott	11" Green Ash	Protected	Poor condition, Growing in chain link fence, remove for fence replacement	Remove tree, no replacement/mitigation required
25	30100 Scott	9" Green Ash	Protected	Poor condition, Growing in chain link fence, remove for fence replacement	Remove tree, no replacement/mitigation required
26	30100 Scott	17" Green Ash	Protected	Poor condition, Growing in chain link fence, remove for fence replacement	Remove tree, no replacement/mitigation required
27	30100 Scott	15" Green Ash	Protected	Remove for construction laydown & storage, Codominant	Remove tree, Provide 15" replacement/mitigation
28	30100 Scott	16" Green Ash	Protected	Remove for construction laydown & storage	Remove tree, Provide 16" replacement/mitigation
29	30100 Scott	15" Sugarberry	Protected	Poor condition, Growing in chain link fence, remove for fence replacement	Remove tree, no replacement/mitigation required
30	30100 Scott	11" Bur Oak	Protected	Remove for construction laydown & storage	Remove tree, Provide 11" replacement/mitigation
31	30100 Scott	13" Sugarberry	Protected	Poor condition, Growing in chain link fence, remove for fence replacement	Remove tree, no replacement/mitigation required
32	30100 Scott	12" Chinaberry	Not Protected	Remove for fence replacement	Remove tree, no replacement/mitigation required
33	30100 Scott	10" Bur Oak	Protected	Growing in chain link fence	Fence
34	30100 Scott	15" Chinaberry	Not Protected	Remove for fence replacement	Remove tree, no replacement/mitigation required
35	30100 Scott	13" Bur Oak	Protected		Fence
36	30100 Scott	13" Bur Oak	Protected	Girdled by planting guy wire, Remove for odor control station	Remove tree, Provide 13" replacement/mitigation
37	30100 Scott	11" Bur Oak	Protected	Remove for odor control station	Remove tree, Provide 11" replacement/mitigation

NO.	DATE	REVISIONS	APP.

C.N. Koehl
Urban Forestry, Inc.
210 Stone Bush Ct. ◦ Katy, Texas 77493
281-391-0022 ckoehl@koehlurbanforestry.com

APPROVED:

QUIDDITY
Texas Board of Professional Engineers and Land Surveyors Reg. No. F-23290
6330 West Loop South, Suite 150 • Bellaire, TX 77401 • 713.777.5337

CITY OF HOUSTON
HARRIS COUNTY, TEXAS

DATE: MARCH 2025 DGN BY:
JOB NO: 00050-0099-01 DWG BY:

NOTE: CITY SIGNATURES VALID FOR ONE YEAR ONLY AFTER DATE OF SIGNATURES

SCOTT STREET No. 1
LIFT STATION
REHABILITATION

TREE PROTECTION PLAN
SHEET 2 OF 2

CITY OF HOUSTON
HOUSTON PUBLIC WORKS

DRAWING SCALE HORIZ: 1"=20' VERT:

CATEGORY NO. . SHEET NO. 48 OF 220

FOR CITY OF HOUSTON USE ONLY

C:\Users\nealo\OneDrive - Gulf Interstate Engineering Company\desktop\INFO\QUIDDITY SCOTT\QUIDDITY SCOTT TP-2.dwg

ORIGINAL SCALE IN INCHES FOR REDUCED PLANS

NO.	DATE	REVISIONS	APP.

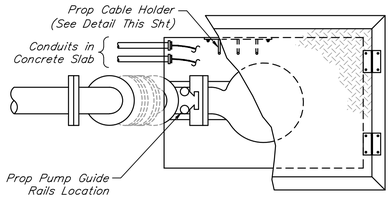

PLAN VIEW ~ LEFT ORIENTATION

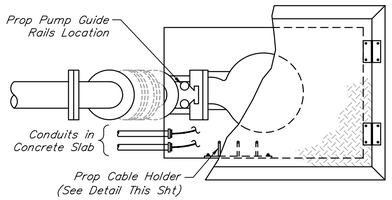

PLAN VIEW ~ RIGHT ORIENTATION

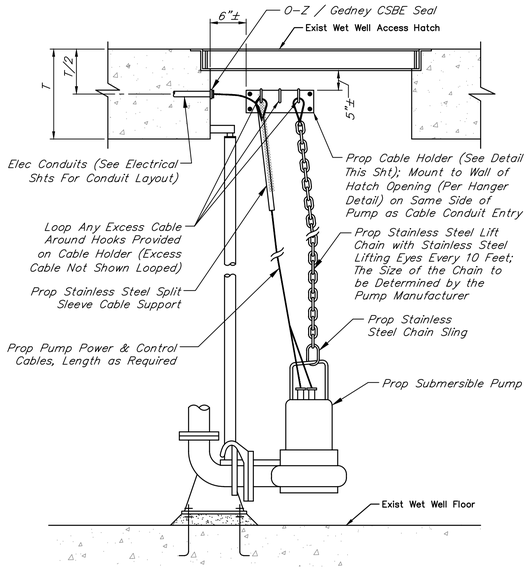

ELEVATION VIEW

TYPICAL PUMP LIFTING AND CABLING FOR NEW PUMP AND PIPING IN EXISTING WET WELL DETAIL

NOT TO SCALE

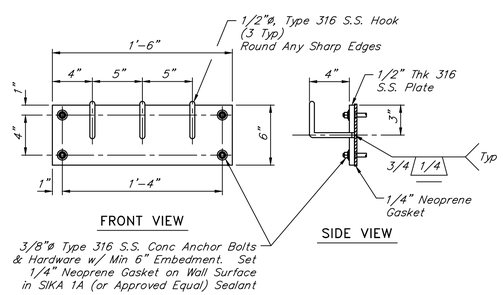

TYPICAL CABLE HOLDER ASSEMBLY DETAIL

NOT TO SCALE

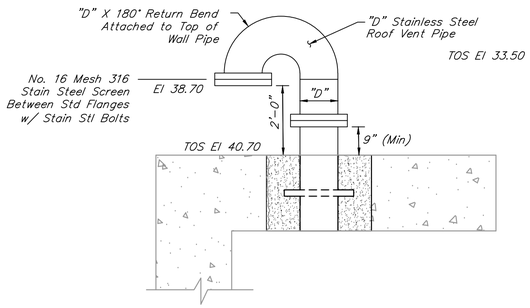

DRY WEATHER WET WELL VENT DETAIL

NOT TO SCALE

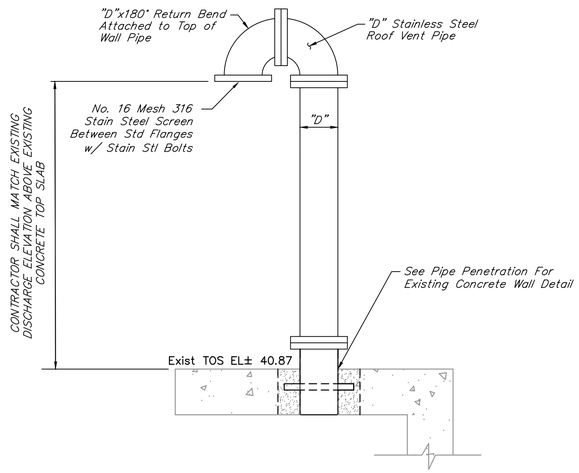

NOTE:

1. "D" is nominal pipe diameter shown on plans.

WET WEATHER WELL VENT DETAIL

NOT TO SCALE

QUIDDITY

Texas Board of Professional Engineers and Land Surveyors Reg. No. F-23290
6330 West Loop South, Suite 150 • Bellaire, TX 77401 • 713.777.5337

JOB NO: 00050-0099-01 DATE: 1/19/2026

APPROVED BY:	
DATE: MAY 2026	
DESIGNED BY: MBMITCHELL	
DRAWN BY: JMMUSSO	
SURVEYED BY:	
FB NO. XXXXXX	

INTERIM REVIEW
Not intended for construction, bidding or permit purposes.
Engineer: WILLIAM R. SAGASTIZADO, P.E
P.E. Serial No.: 125999
Date: MAY 2026

CITY OF HOUSTON
HOUSTON PUBLIC WORKS

SCOTT STREET NO. 1 LIFT STATION REHABILITATION

MECHANICAL

LIFT STATION MECHANICAL DETAILS SHEET 1 OF 6

WBS NUMBER	FOR CITY OF HOUSTON USE ONLY
R-000267-127A-4	
DRAWING SCALE	
AS NOTED	
CITY OF HOUSTON PM	
TAHA LOTIA	
DWG NO. O-M-1	
SHEET NO. 49 OF 220	

K:\00050\00050-0099-01 Scott St. No. 1 Lift Station Rehabilitation - Phase II Design\2 Design Phase\CAD\MECHDTLS.dwg

ORIGINAL SCALE IN INCHES FOR REDUCED PLANS

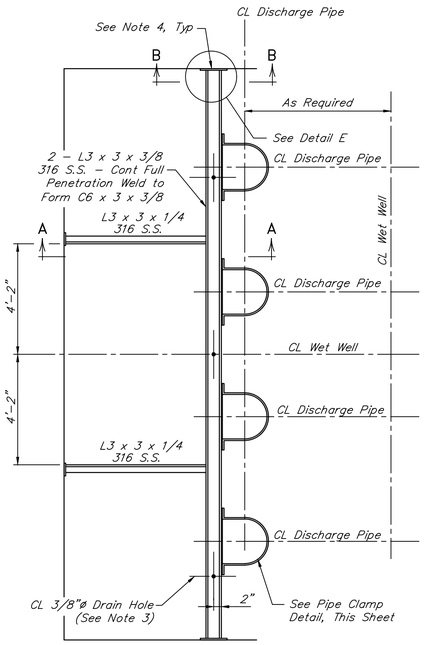

PLAN VIEW

TYPICAL DISCHARGE PIPING SUPPORT DETAIL FOR 4 PUMPS

NOT TO SCALE

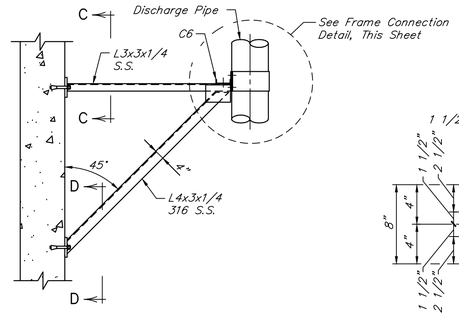

SECTION "A–A"

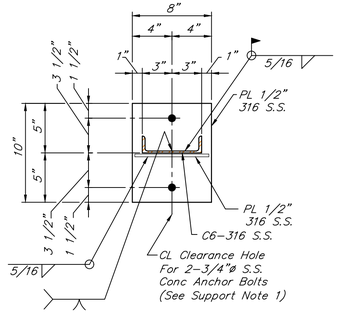

SECTION "B–B"

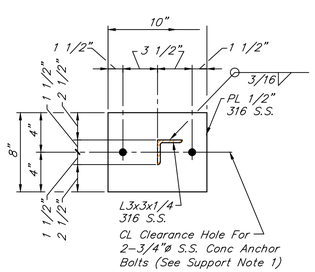

SECTION "C–C"

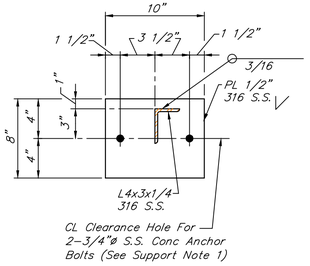

SECTION "D–D"

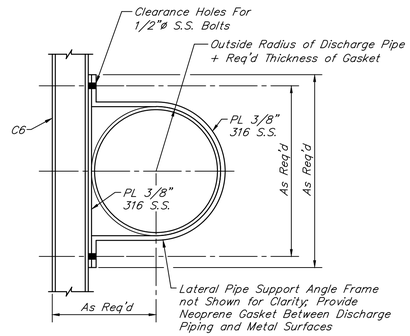

PIPE CLAMP DETAIL

NOT TO SCALE

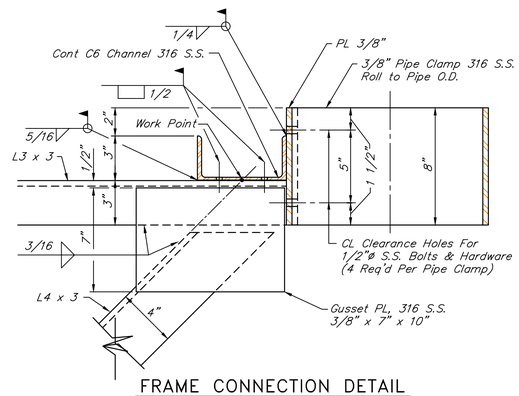

FRAME CONNECTION DETAIL

NOT TO SCALE

NO.	DATE	REVISIONS	APP.

NOTES:

1. Concrete anchor bolts shall have 6" minimum embedment and shall be type 316 stainless steel.
2. See station and structural drawings for dimensions and information not shown.
3. Drill 3/8" holes 1" off CL of C6 at midspan between lateral pipe supports to allow for drainage. Three (3) holes per channel where two (2) lateral supports required; Two (2) holes per channel where one (1) lateral support required.
4. Set 1/4" neoprene gasket on wall surface in Sika 1A (or equal) sealant.

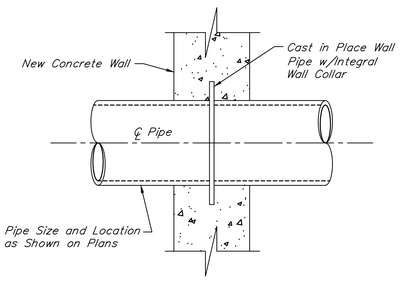

PIPE PENETRATION DETAIL

NOT TO SCALE

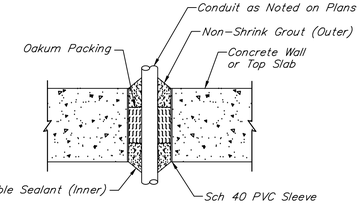

NOTE:

Sleeved wet well penetration is not to be used for conduit installation. See electrical detail sheets for conduit penetrations.

SLEEVED WET WELL PENETRATION DETAIL

NOT TO SCALE

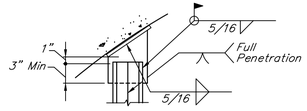

DETAIL E

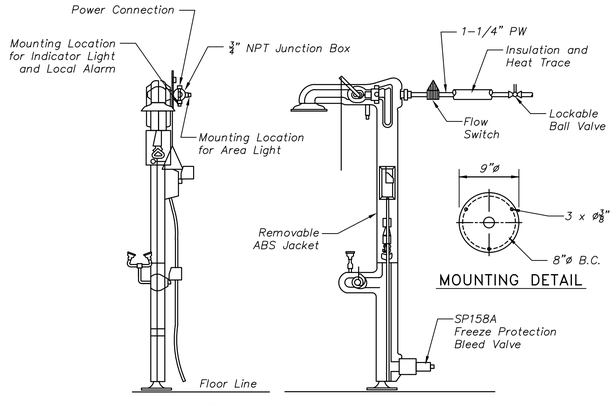

MOUNTING DETAIL

NOTE:

1. At the Contractor's option and depending on location of water supply location, the water supply can be connected at either manufacturer provided supply connection, top or bottom.
2. All pipe shall either be PVC or stainless steel.

IMPORTANT:
POTABLE WATER SUPPLY MUST BE HEAT TRACED AND INSULATED

EMERGENCY SHOWER/EYEWASH DETAIL

NOT TO SCALE

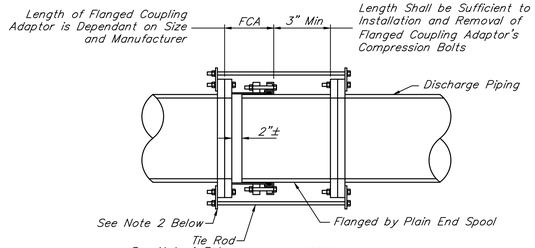

NOTES:

1. Provide a number of tie rods equal to 1/2 the number of flange bolts. Evenly space installation of tie rods. Diameter of tie rods to be equal to the diameter of flange bolts. Length of tie rods to be determined by Contractor based on size and manufacturer of flanged coupling adaptor and final length of spool piece.
2. Provide 316 S.S. tab for attachment of tie rods. Size to be determined by Contractor.
3. Contractor to submit details during shop drawing submission.
4. All hardware shall be 316 stainless steel. Tie rods should be threaded.
5. This restraint does not replace thrust blocks to be provided at other locations.

TYP FLANGED COUPLING ADAPTOR RESTRAINT DETAIL

NOT TO SCALE

QUIDDITY

Texas Board of Professional Engineers and Land Surveyors Reg. No. F-23290
6330 West Loop South, Suite 150 • Bellaire, TX 77401 • 713.777.5337

JOB NO: 00050–0099–01 DATE: 1/19/2026

APPROVED BY:

DATE: MAY 2026

DESIGNED BY: MBMITCHELL

DRAWN BY: JMMUSSO

SURVEYED BY:

FB NO. XXXXX

INTERIM REVIEW
Not intended for construction, bidding or permit purposes.
Engineer: WILLIAM R. SAGASTIZADO, P.E
P.E. Serial No.: 125999
Date: MAY 2026

CITY OF HOUSTON
HOUSTON PUBLIC WORKS

SCOTT STREET NO. 1
LIFT STATION REHABILITATION
MECHANICAL

LIFT STATION
MECHANICAL DETAILS
SHEET 2 OF 6

WBS NUMBER	FOR CITY OF HOUSTON USE ONLY
R–000267–127A–4	
DRAWING SCALE	
AS NOTED	
CITY OF HOUSTON PM	
TAHA LOTIA	
DWG NO. O–M–2	
SHEET NO. 50 OF 220	

K:\00050\00050-0099-01 Scott St. No. 1 Lift Station Rehabilitation - Phase II Design\2 Design Phase\CAD\MECHDTLS.dwg

ORIGINAL SCALE IN INCHES FOR REDUCED PLANS

NO.	DATE	REVISIONS	APP.

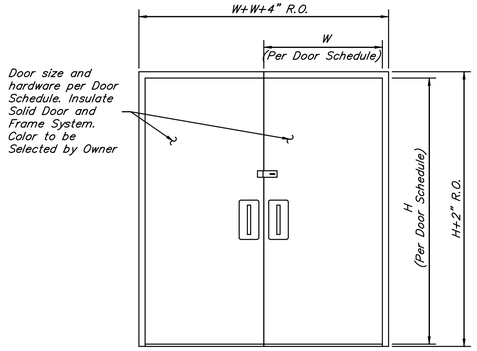

TYPICAL DUAL DOOR DETAIL
NOT TO SCALE

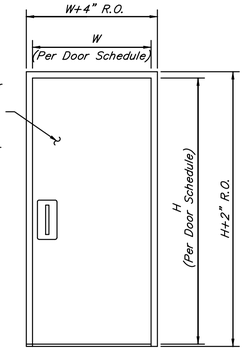

TYPICAL SINGLE DOOR DETAIL
NOT TO SCALE

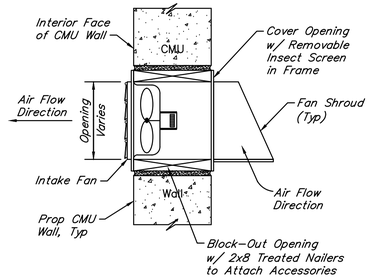

INTAKE/SUPPLY FAN DETAIL
NOT TO SCALE

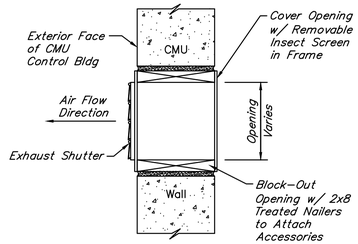

EXHAUST SHUTTER DETAIL
NOT TO SCALE

NOTES:

1. Trap guard shall be factory fitted to match each floor drain (and floor sink) by size, model, and manufacturer.
2. Floor sink trap guard installation is similar.
3. Installation of trap guard to be in accordance with manufacturer's recommendations.
4. Insert trap guard only after final rodding of drains. Install trap guard with clear silicone caulk for gas tite seal. For drain rodding after installation, insert sewer tape through lightly greased 1–½" PVC pipe to protect trap guard.

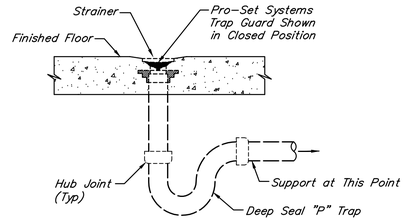

FLOOR DRAIN WITH TRAP SEAL DETAIL
NOT TO SCALE

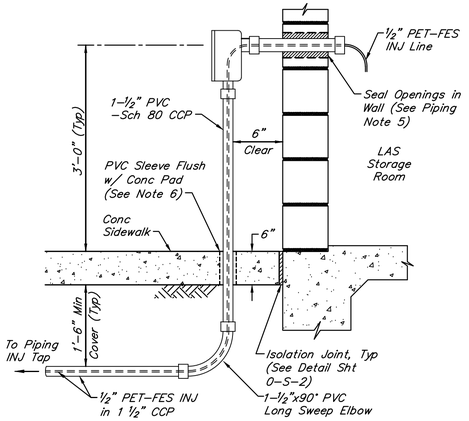

FES INJ LINE WALL PENETRATION DETAIL
NOT TO SCALE

PIPING NOTES:

1. Contractor shall construct all PE solution lines encased in Sch 80 PVC conduit and use only long sweep elbows and bends to allow tubing to be easily repaired and/or replaced in the future.
2. All chemical injection lines and taps shall be constructed as per the referenced detail drawings unless approved otherwise by the Engineer prior to making any changes.
3. The aboveground eye wash/shower safety station and water supply line shall be secured to the sidewalk and adjacent CMU wall with approved SS struts and Type 316 SS hardware as required.
4. All PVC piping shall be installed in accordance with the piping manufacturer's specifications.
5. All wall penetrations through CMU building walls shall be tightly sealed with an approved chemical resistant non-shrink grout.
6. All PVC sleeves shall be sized to minimize the void between the main pipe and the sleeve to a maximum 1/4-inch (1/4") gap.

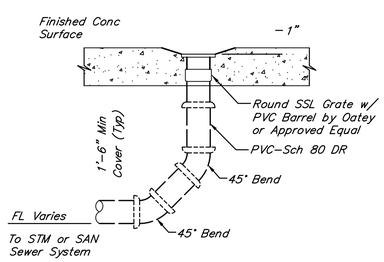

TYPICAL DRAIN GRATE DETAIL
NOT TO SCALE

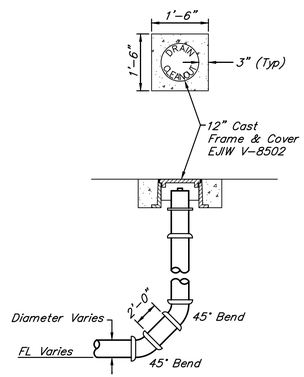

CLEANOUT DETAIL
NOT TO SCALE

NOTES:

1. Light Duty Unistruts shall be used for 1/2" through 3" pipes. Heavy Duty Unistruts shall be used for 4" and 6" pipes.
2. Fiberglass bolts and nuts shall by tightened by hand ONLY.
3. For multiple pipes, extend length of fiberglass support channel as needed. Provide a minimum of clearance of 6" between pipes.

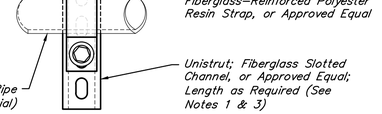

END VIEW

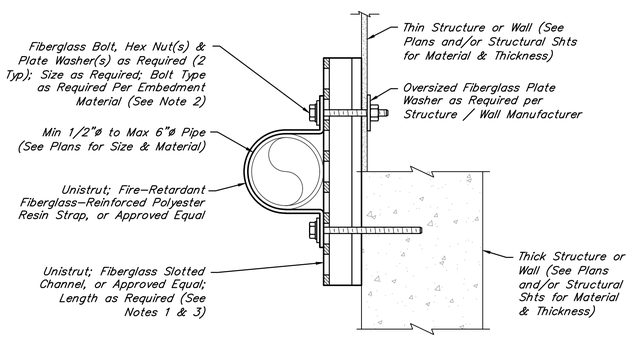

SECTION VIEW

UNISTRUT WALL SUPPORT DETAIL FOR PIPING 1/2" THROUGH 6" DIAMETER
NOT TO SCALE

QUIDDITY
Texas Board of Professional Engineers and Land Surveyors Reg. No. F-23290
6330 West Loop South, Suite 150 • Bellaire, TX 77401 • 713.777.5337

JOB NO: 00050-0099-01 DATE: 1/19/2026

APPROVED BY:

DATE: MAY 2026

DESIGNED BY: MBMITCHELL

DRAWN BY: JMMUSSO

SURVEYED BY:

FB NO. XXXXXX

INTERIM REVIEW
Not intended for construction, bidding or permit purposes.
Engineer: WILLIAM R. SAGASTIZADO, P.E.
P.E. Serial No.: 125999
Date: MAY 2026

CITY OF HOUSTON
HOUSTON PUBLIC WORKS

SCOTT STREET NO. 1 LIFT STATION REHABILITATION
MECHANICAL

MECHANICAL DETAILS SHEET 3 OF 6

WBS NUMBER	FOR CITY OF HOUSTON USE ONLY
R-000267-127A-4	
DRAWING SCALE	
AS NOTED	
CITY OF HOUSTON PM	
TAHA LOTIA	
DWG NO. O-M-3	
SHEET NO. 51 OF 220	

K:\00050\00050-0099-01 Scott St. No. 1 Lift Station Rehabilitation - Phase II Design\2 Design Phase\CAD\MECHDTLS.dwg

ORIGINAL SCALE IN INCHES FOR REDUCED PLANS

NO.	DATE	REVISIONS	APP.

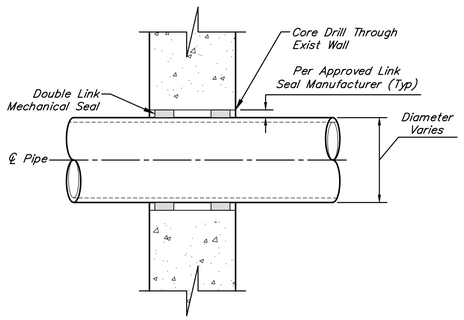

EXIST CONC CORE DRILL PIPE PENETRATION DETAIL

NOT TO SCALE

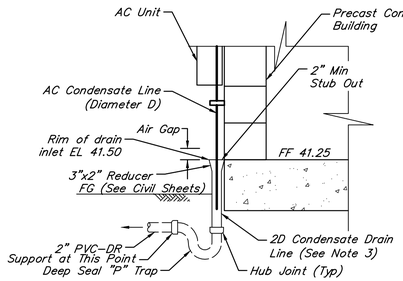

AC CONDENSATE DRAIN DETAIL

NOT TO SCALE

AC CONDENSATE DRAIN NOTES:

1. AC Waste line shall be at least 1 pipe diameter larger than the condensate line and shall be coordinated with the AC Manufacturer.
2. Support AC Condensate line to CMU w/ strut and SS hardware.
3. Provide air gap between A/C condensate line and A/C waste line in accordance with local code.
4. Detail shown for illustrative purposes only. Contractor shall route A/C Condensate line in accordance with submitted A/C manufacturer.

NOTES:

1. Contractor shall provide and install appropriate fittings and accessories to make designated underground connection.
2. Fittings under the structure shall be restrained as per specifications.

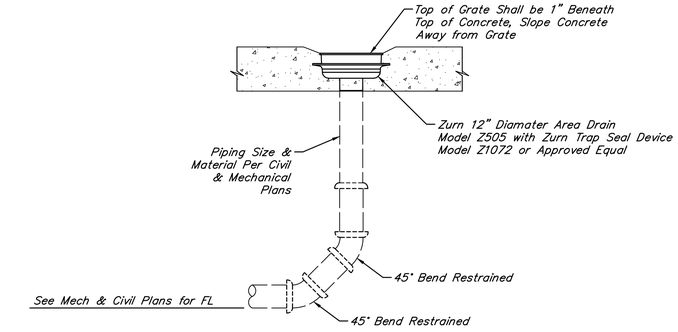

AREA DRAIN DETAIL

NOT TO SCALE

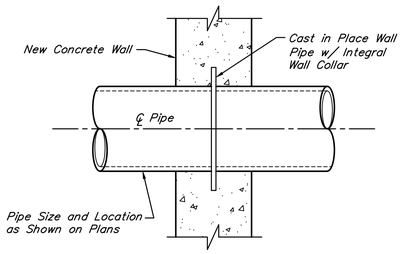

PIPE PENETRATION FOR PROPOSED CONCRETE WALL DETAIL

NOT TO SCALE

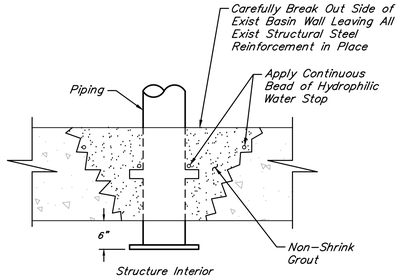

PIPE PENETRATION FOR EXISTING CONCRETE WALL DETAIL

NOT TO SCALE

NOTE:

1. Provide warning sign when hose bibb is used for potable water.
2. Hose bibbs to be either brass or epoxy painted.

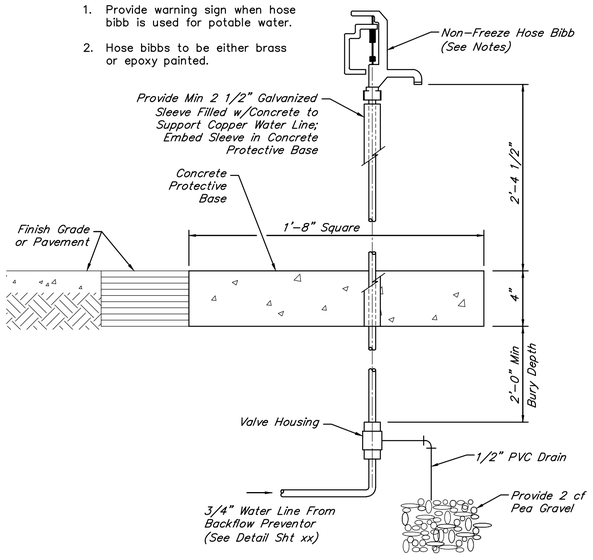

TYP NON-FREEZE HOSE BIBB DETAIL

NOT TO SCALE

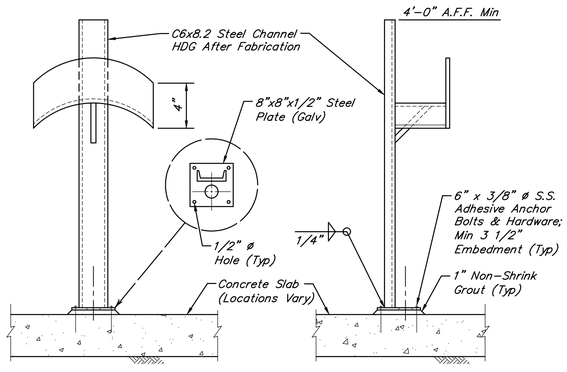

HOSE RACK DETAIL – SLAB-MOUNTED

NOT TO SCALE

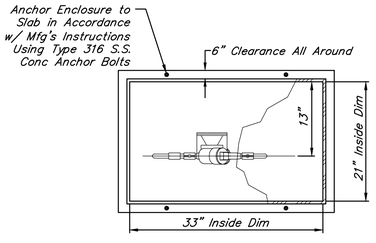

PLAN VIEW

QUIDDITY

Texas Board of Professional Engineers and Land Surveyors Reg. No. F-23290
6330 West Loop South, Suite 150 • Bellaire, TX 77401 • 713.777.5337

JOB NO: 00050-0099-01 DATE: 1/19/2026

APPROVED BY:

DATE: MAY 2026

DESIGNED BY: MBMITCHELL

DRAWN BY: JMMUSSO

SURVEYED BY:

FB NO. XXXXXX

INTERIM REVIEW
Not intended for construction, bidding or permit purposes.
Engineer: WILLIAM R. SAGASTIZADO, P.E
P.E. Serial No.: 125999
Date: MAY 2026

CITY OF HOUSTON
HOUSTON PUBLIC WORKS

SCOTT STREET NO. 1 LIFT STATION REHABILITATION
MECHANICAL

MECHANICAL DETAILS SHEET 4 OF 6

WBS NUMBER	FOR CITY OF HOUSTON USE ONLY
R-000267-127A-4	
DRAWING SCALE	
AS NOTED	
CITY OF HOUSTON PM	
TAHA LOTIA	
DWG NO. O-M-4	
SHEET NO. 52 OF 220	

K:\00050\00050-0099-01 Scott St. No. 1 Lift Station Rehabilitation - Phase II Design\2 Design Phase\CAD\MECHDTLS.dwg

0 1 2 3 4 5 ORIGINAL SCALE IN INCHES FOR REDUCED PLANS

NO.	DATE	REVISIONS	APP.

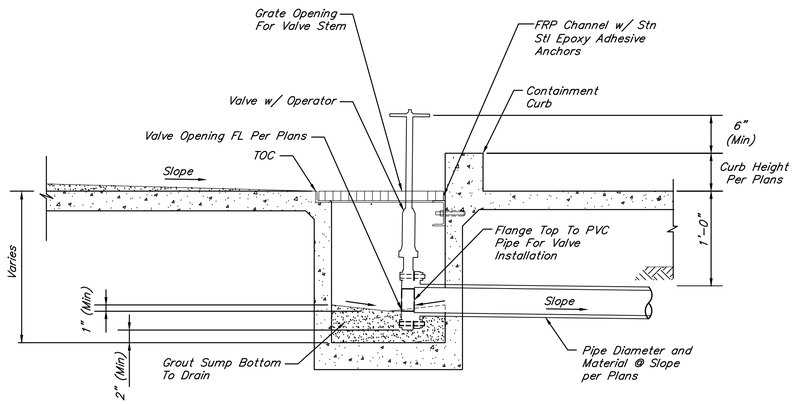

CHEMICAL CONTAINMENT AREA SUMP DETAIL
NOT TO SCALE

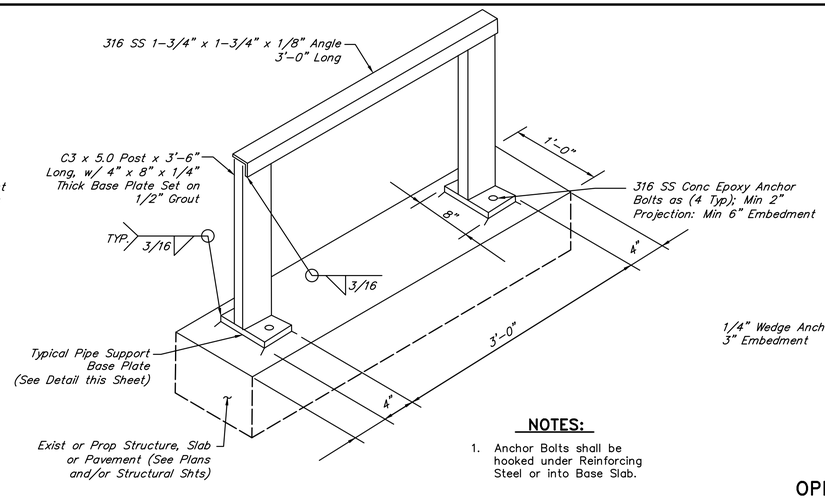

NOTES:

1. Anchor Bolts shall be hooked under Reinforcing Steel or into Base Slab.

TANK FILL PIPE SUPPORT DETAIL
NOT TO SCALE

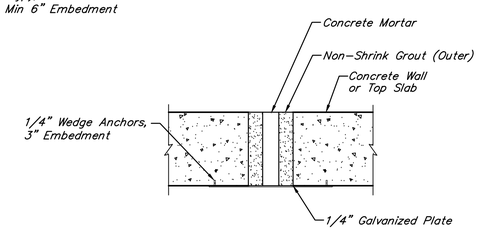

OPENINGS SEALED WITH CONCRETE MORTAR DETAIL
NOT TO SCALE

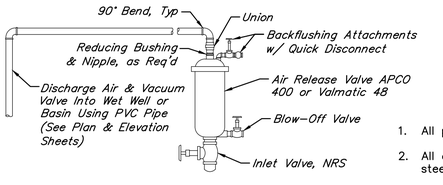

NOTES:

1. All pipe and fittings shall be 304 SST.
2. All air release valves shall be stainless steel.

TYPICAL AIR RELEASE VALVE ASSEMBLY
NOT TO SCALE

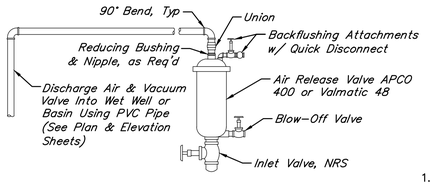

NOTES:

1. Nipples and fittings to be grade 304 stainless steel.

TYPICAL AIR & VACUUM VALVE ASSEMBLY
NOT TO SCALE

PRESSURE GAUGE APPLICATION & RANGES

AREA	GAUGE RANGE
DRY WEATHER LIFT STATION	0 – 25 psi
WET WEATHER LIFT STATION	0 – 100 psi
FLOW METER STATION	0 – 100 psi

NOTES:

1. Orient the pressure gauge face towards the nearest walkway.
2. See pressure gauge application & ranges table for pressure ranges.
3. Contractor shall refer to plans for pressure gauge piping scheme where standard vertical orientation is not indicated.

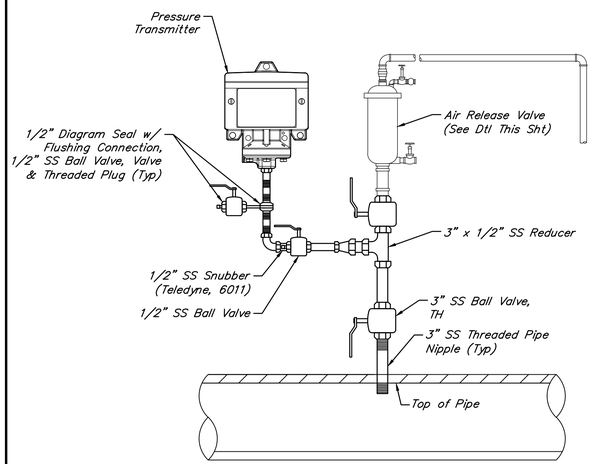

PRESSURE INDICATING TRANSMITTER & AIR RELEASE/ AIR ASSEMBLY WITH DIAPHRAGM SEAL DETAIL
NOT TO SCALE

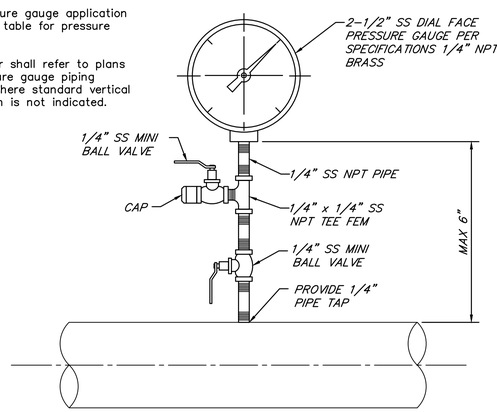

1. ALL FITTINGS SHALL BE STAINLESS STEEL (316).

PRESSURE GAUGE DETAIL
NOT TO SCALE

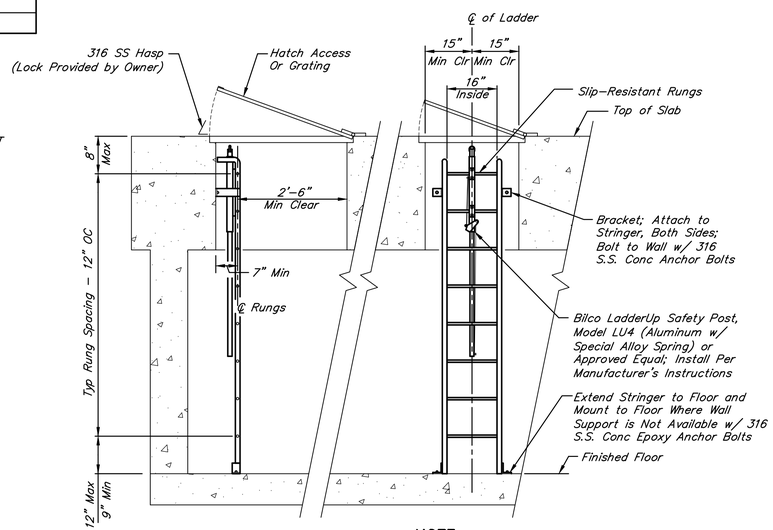

NOTE:

Contractor to provide detail drawings of ladder during shop drawing submission.

VALVE VAULT ACCESS LADDER INSTALLATION DETAIL
NOT TO SCALE

QUIDDITY
Texas Board of Professional Engineers and Land Surveyors Reg. No. F-23290
6330 West Loop South, Suite 150 • Bellaire, TX 77401 • 713.777.5337

JOB NO: 00050-0099-01 DATE: 1/19/2026

APPROVED BY:

DATE: MAY 2026

DESIGNED BY: MBMITCHELL

DRAWN BY: JMMUSSO

SURVEYED BY:

FB NO. XXXXXX

INTERIM REVIEW
Not intended for construction, bidding or permit purposes.
Engineer: WILLIAM R. SAGASTIZADO, P.E
P.E. Serial No.: 125999
Date: MAY 2026

CITY OF HOUSTON
HOUSTON PUBLIC WORKS

SCOTT STREET NO. 1 LIFT STATION REHABILITATION
MECHANICAL

MECHANICAL DETAILS SHEET 5 OF 6

WBS NUMBER	FOR CITY OF HOUSTON USE ONLY
R-000267-127A-4	
DRAWING SCALE	
AS NOTED	
CITY OF HOUSTON PM	
TAHA LOTIA	
DWG NO. O-M-5	
SHEET NO. 53 OF 220	

K:\00050\00050-0099-01 Scott St. No. 1 Lift Station Rehabilitation - Phase II Design\2 Design Phase\CAD\MECHDTLS.dwg

0 1 2 3 4 5 ORIGINAL SCALE IN INCHES FOR REDUCED PLANS

NO.	DATE	REVISIONS	APP.

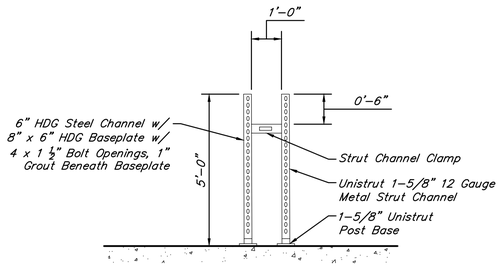

FLOW METER STATION
UNISTRUT H-FRAME PIPE SUPPORT DETAIL

NOT TO SCALE

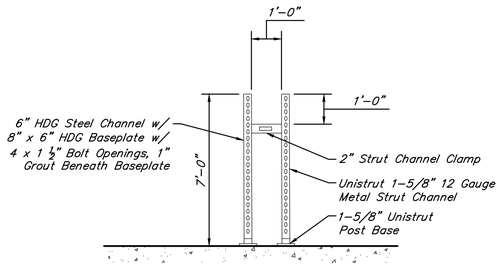

ODOR CONTROL
UNISTRUT H-FRAME PIPE SUPPORT DETAIL

NOT TO SCALE

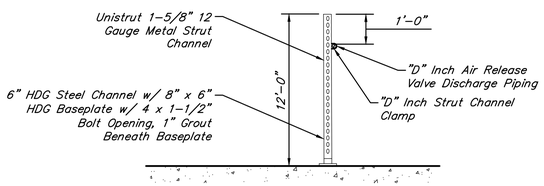

WET WEATHER LIFT STATION
UNISTRUT H-FRAME PIPE SUPPORT DETAIL

NOT TO SCALE

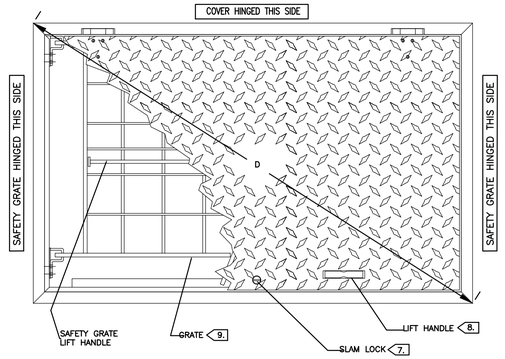

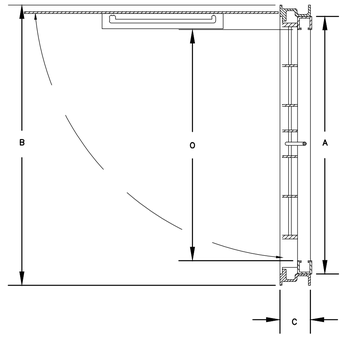

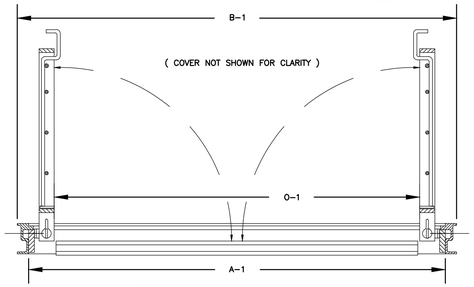

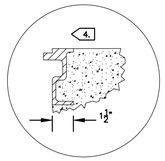

DETAIL B

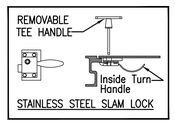

DETAIL A

PATTERN NO.	DIMENSIONS IN INCHES		UNOBSTRUCTED CLEAR OPENING	HEIGHT	DIAGONAL
ALUMINUM	A x A1	B x B1	O x O1	C	D
FLED-AOSH	PER MANUFACTURER	PER MANUFACTURER	MATCH EXISTING	PER MANUFACTURER	PER MANUFACTURER

1.) MATERIAL SHALL BE 6061-T6 ALUMINUM FOR BARS, ANGLES, AND EXTRUSIONS. 1/4" DIAMOND PLATE SHALL BE 5086 ALUMINUM. EXTERIOR OF FRAME WHICH COMES IN CONTACT WITH CONCRETE SHALL HAVE ONE COAT FOREST GREEN PAINT.

2.) UNIT DESIGNED PEDESTRIAN RATED FOR A MINIMUM LIVE LOAD OF 300 LBS./SQ.FT.

3.) DOOR SHALL BE EQUIPPED WITH A HOLD OPEN ARM. DOOR SHALL LOCK OPEN IN THE 90 DEGREE POSITION. HOLD OPEN ARM SHALL BE FASTENED TO THE FRAME WITH A 1/2" GRADE 316 STAINLESS STEEL BOLT.

4.) ANGLE FRAME SHALL BE OF EXTRUDED ALUMINUM, WITH A CONTINUOUS 1-1/2" ANCHOR FLANGE.

5.) COVER HINGES SHALL BE OF HEAVY DUTY DESIGN. MATERIAL SHALL BE GRADE 316 STAINLESS STEEL. EACH HINGE SHALL HAVE A GRADE 316 STAINLESS STEEL, 3/8" DIAMETER HINGE PIN. HINGE SHALL BE FASTENED TO ANGLE AND DIAMOND PLATE WITH GRADE 316 STAINLESS STEEL BOLTS AND NY-LOCK NUTS.

6.) ALL HARDWARE SHALL BE STAINLESS STEEL.

7.) EACH HATCH SHALL BE SUPPLIED WITH A GRADE 316 STAINLESS STEEL SLAM LOCK, WITH KEY WAY PROTECTED BY A THREADED PLUG. PLUG SHALL BE FLUSH WITH THE TOP OF THE 1/4" DIAMOND PLATE. SLAM LOCK SHALL BE FASTENED WITH FOUR GRADE 316 STAINLESS STEEL BOLTS AND WASHERS.

8.) EACH HATCH SHALL BE EQUIPPED WITH AN ALUMINUM LIFT HANDLE. THE LIFT HANDLE SHALL BE FLUSH WITH THE TOP OF THE 1/4" DIAMOND PLATE.

9.) UNITS SHALL BE SUPPLIED WITH A HINGED SAFETY GRATES (SAFETY YELLOW) TO PROVIDE PROTECTION AGAINST FALL THROUGH AND TO CONTROL ACCESS TO THE CONFINED SPACE. (SEE SAFETY GRATE SPECIFICATIONS ON SEPARATE PAGE.)

10.) HATCH COVERS SHALL BE PAINTED FOREST GREEN TO DEMARCATE AND PREVENT VANDALISM.

LIFT STATION WET WELL
AND SPLITTER BOX HATCHES

SOURCE: ITT/FLYGT

QUIDDITY
Texas Board of Professional Engineers and Land Surveyors Reg. No. F-23290
6330 West Loop South, Suite 150 • Bellaire, TX 77401 • 713.777.5337

JOB NO: 00050-0099-01 DATE: 1/19/2026

APPROVED BY:

DATE: MAY 2026

DESIGNED BY: MBMITCHELL

DRAWN BY: JMMUSSO

SURVEYED BY:

FB NO. XXXXXX

INTERIM REVIEW
Not intended for construction, bidding or permit purposes.
Engineer: WILLIAM R. SAGASTIZADO, P.E.
P.E. Serial No.: 125999
Date: MAY 2026

CITY OF HOUSTON
HOUSTON PUBLIC WORKS

SCOTT STREET NO. 1
LIFT STATION REHABILITATION
MECHANICAL

MECHANICAL DETAILS
SHEET 6 OF 6

WBS NUMBER	FOR CITY OF HOUSTON USE ONLY
R-000267-127A-4	
DRAWING SCALE	
AS NOTED	
CITY OF HOUSTON PM	
TAHA LOTIA	
DWG NO. O-M-6	
SHEET NO. 54 OF 220	

K:\00050\00050-0099-01 Scott St. No. 1 Lift Station Rehabilitation - Phase II Design\2 Design Phase\CAD\MECHDTLS.dwg

ORIGINAL SCALE IN INCHES FOR REDUCED PLANS

ITEMS OF WORK

No.	DESCRIPTION	No.	DESCRIPTION
1	Chip out and demolish existing 12" GS vents.	8	Demolish existing submersible pumps, base elbows, lifting chain, guiderails, power cables, and electrical junction boxes.
2	Chip out and demolish existing 4'–0" x 3'–0" access hatch.	9	Demolish existing 6" DI – DR up to flange at wall pipe penetration.
3	Demolish existing slide gate operator and slide gate.	10	Demolish existing level instruments, floats, and cables.
4	Chip out and demolish pump access hatch.	11	Demolish existing valve vault access ladder.
5	Demolish existing FRP grating, grating framing, embeds, and concrete curb. For any exposed rebar, cut and grind flush (2" below finished floor, and grout to prevent oxidation.	12	Chip out and demolish existing 20" riser piping wall collars.
6	Chip out and demolish existing 3/4" FES in 3" PVC pipe	13	Chip out and demolish existing 24" force main piping wall collars.
7	Demolish existing riser and header piping, valves, fittings, and pipe supports in the wet well and valve vault.	14	Demolish existing baffle wall and underflow baffles. For any exposed rebar, cut and grind flush (2") below finished floor, and grout to prevent oxidation.

ITEMS OF WORK (ALTERNATE BID ITEMS)

No.	DESCRIPTION
A1	Chip out and demolish existing 4" drain line piping wall collars. (Alternate Bid Item No. 1)
A2	Chip out and demolish existing 6" drain line piping wall collars. (Alternate Bid Item No. 2)

NO.	DATE	REVISIONS	APP.

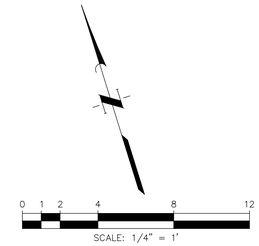

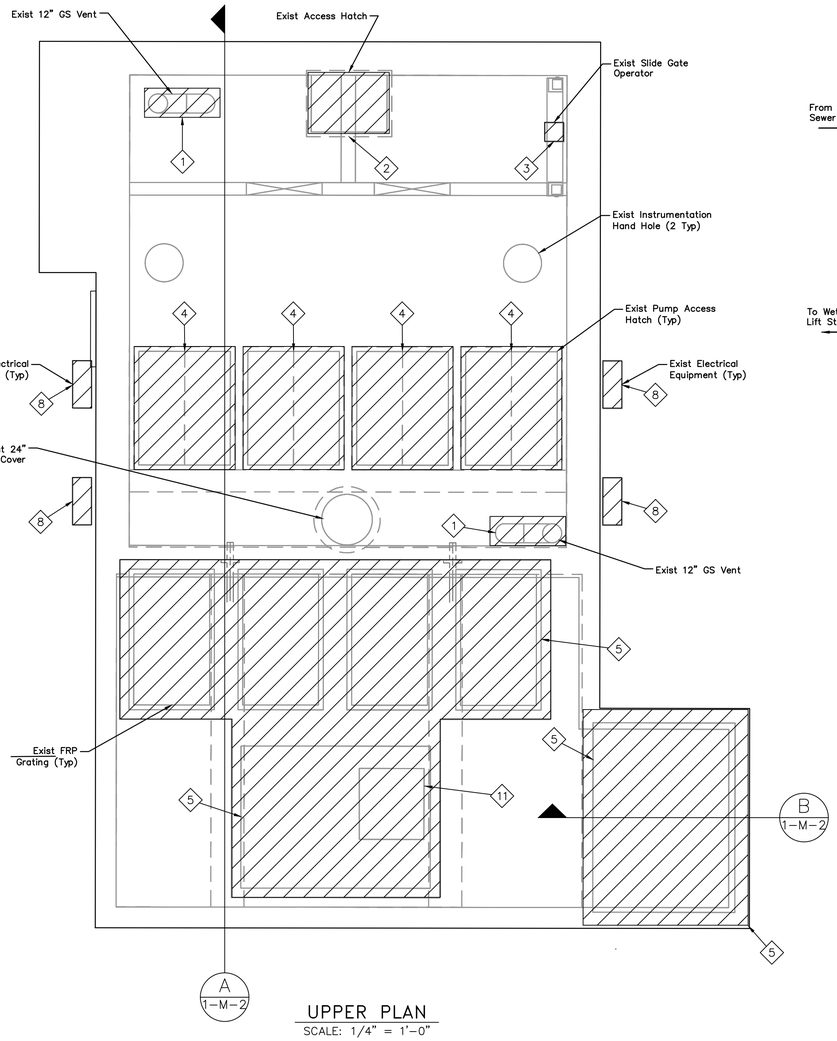

UPPER PLAN
SCALE: 1/4" = 1'–0"

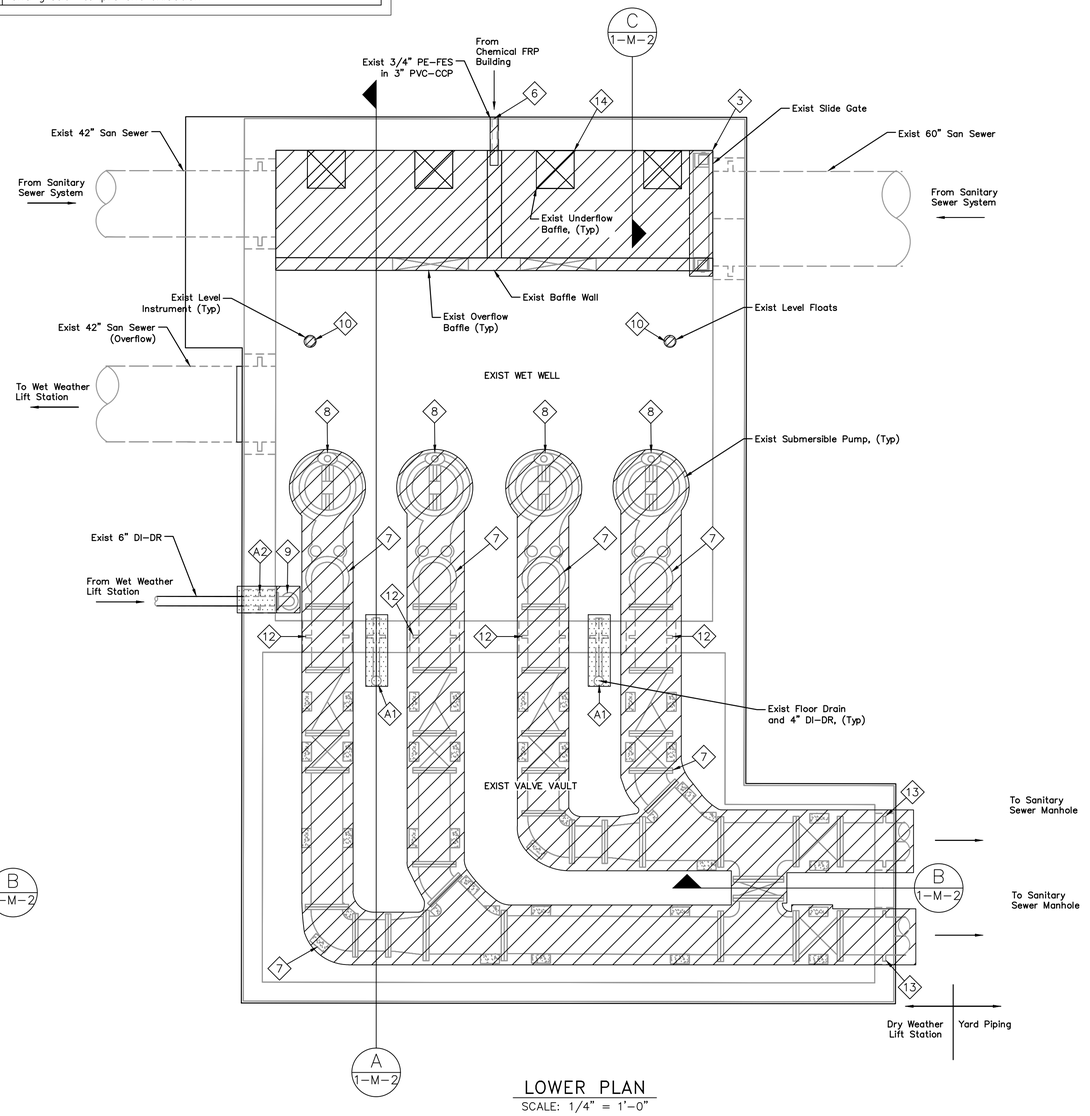

LOWER PLAN
SCALE: 1/4" = 1'–0"

LEGEND:

DEMOLISH

DEMOLISH (Alternate Bid Item)

NOTES:

1. All existing structures, dimensions, locations, and materials shown are based on City of Houston's record drawings. Contractor shall field verify existing dimensions, locations, and materials as required to complete the work and as directed by the Engineer. Field verification shall be incidental to the work.
2. For any exposed rebar, cut and grind flush, and grout to prevent oxidation.
3. City of Houston retains first right of refusal on all demolition items. Contractor shall coordinate with City of Houston Wastewater OPS on all equipment to be salvaged. Contractor shall deliver salvaged items to a location as determined by City of Houston Wastewater OPS.

QUIDDITY
Texas Board of Professional Engineers and Land Surveyors Reg. No. F-23290
6330 West Loop South, Suite 150 • Bellaire, TX 77401 • 713.777.5337

JOB NO: 00050–0099–01 DATE: 1/19/2026

APPROVED BY:

DATE: MAY 2026

DESIGNED BY: CTHOMAS

DRAWN BY: CHUDSON

SURVEYED BY:

FB NO. XXXXXX

INTERIM REVIEW
Not intended for construction, bidding or permit purposes.
Engineer: HARRY W. ISENSEE III, P.E.
P.E. Serial No.: 144401
Date: MAY 2026

CITY OF HOUSTON
HOUSTON PUBLIC WORKS

SCOTT STREET NO. 1 LIFT STATION REHABILITATION

MECHANICAL

DRY WEATHER PUMP STATION DEMOLITION PLAN

WBS NUMBER	FOR CITY OF HOUSTON USE ONLY
R–000267–127A–4	
DRAWING SCALE	
AS NOTED	
CITY OF HOUSTON PM	
TAHA LOTIA	
DWG NO. 1–M–1	
SHEET NO. 55 OF 220	

K:\00050\00050-0099-01 Scott St. No. 1 Lift Station Rehabilitation - Phase II Design\2 Design Phase\CAD\MECH.dwg

0 1 2 3 4 5 ORIGINAL SCALE IN INCHES FOR REDUCED PLANS

ITEMS OF WORK

No.	DESCRIPTION	No.	DESCRIPTION
1	Chip out and demolish existing 12" GS vents.	8	Demolish existing level instruments, floats, and cables.
2	Chip out and demolish existing pump access hatch.	9	Demolish existing 24" force main piping, valves, fittings, instruments and pipe supports.
3	Demolish existing FRP grating, grating framing, embeds, and concrete curb.	10	Demolish existing baffle wall.
4	Demolish existing 20" riser piping, valves, fittings, and pipe supports.	11	Demolish existing grouting.
5	Demolish existing 6" DI – DR up to flange at wall pipe penetration.	12	Demolish existing slide gate frame and extended intermediate stem.
6	Demolish existing submersible pumps, base elbows, lifting chain, guiderails, and power cables.	13	Chip out and demolish exist 20" riser piping wall collars.
7	Demolish existing pump shelf.	14	Chip out and demolish exist 24" force main piping wall collars.

ITEMS OF WORK (ALTERNATE BID ITEMS)

No.	DESCRIPTION
A1	Chip out and demolish existing 4" drain line piping and wall collars. (Alternate Bid Item No. 1)

NO.	DATE	REVISIONS	APP.

LEGEND:

DEMOLISH

DEMOLISH (Alternate Bid Item)

NOTES:

1. All existing structures, dimensions, locations, elevations, and materials shown are based on City of Houston's record drawings. Contractor shall field verify existing dimensions, locations, elevations, and materials as required to complete the work and as directed by Engineer. Field verification shall be incidental to the work.
2. For any exposed rebar, cut and grind flush, and grout to prevent oxidation.
3. City of Houston retains first right of refusal on all demolition items. Contractor shall coordinate with City of Houston Wastewater OPS on all equipment to be salvaged. Contractor shall deliver salvaged items to a location as determined by City of Houston Wastewater OPS.

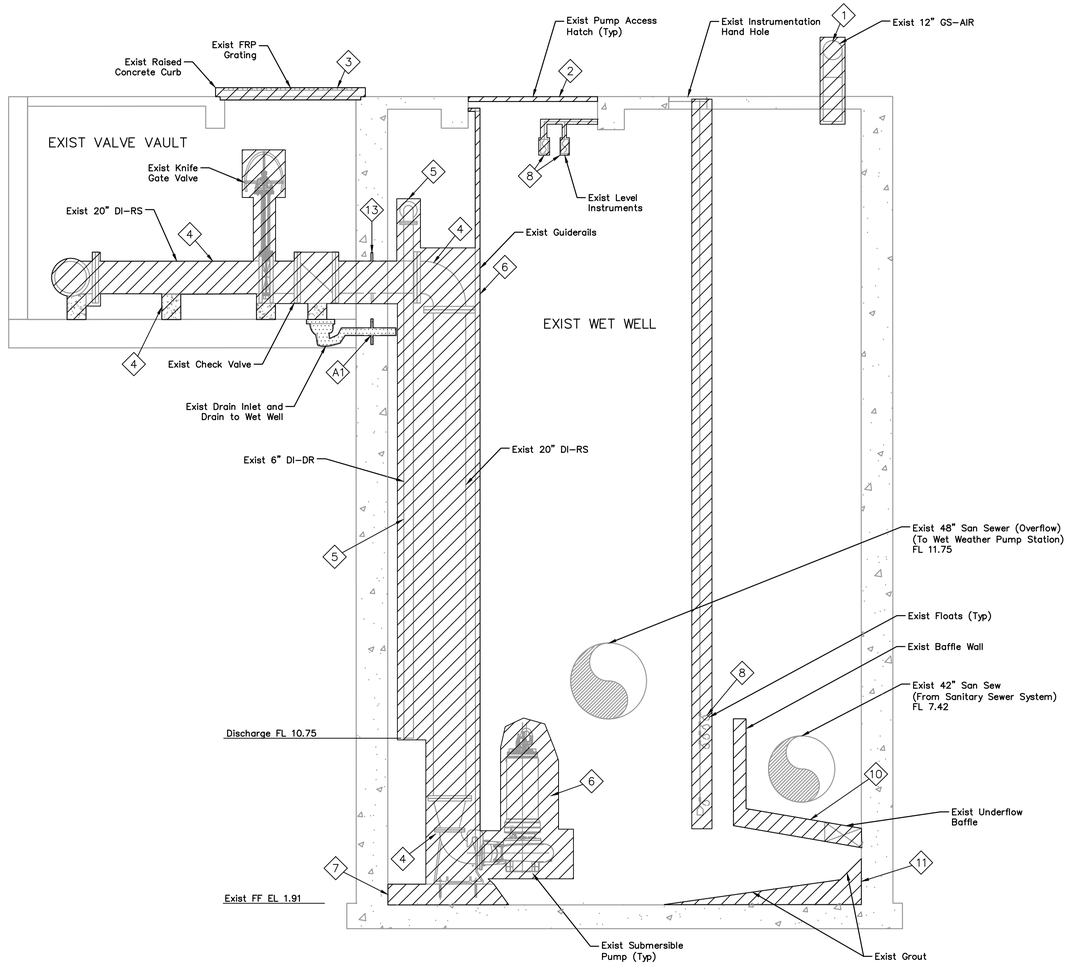

SECTION A–A
SCALE: 1/4" = 1'–0"

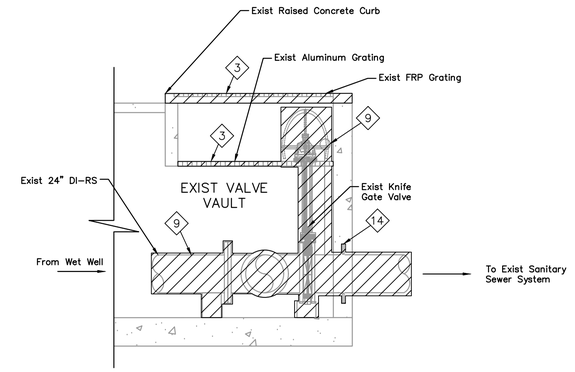

SECTION B–B
SCALE: 1/4" = 1'–0"

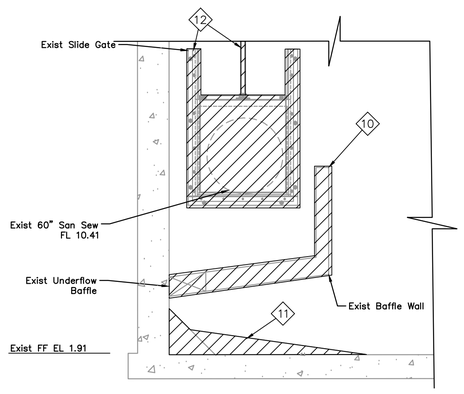

SECTION C–C
SCALE: 1/4" = 1'–0"

QUIDDITY
Texas Board of Professional Engineers and Land Surveyors Reg. No. F-23290
6330 West Loop South, Suite 150 • Bellaire, TX 77401 • 713.777.5337

JOB NO: 00050–0099–01 DATE: 1/19/2026

APPROVED BY:

DATE: MAY 2026

DESIGNED BY: CTHOMAS

DRAWN BY: CHUDSON

SURVEYED BY:

FB NO. XXXXXX

INTERIM REVIEW
Not intended for construction, bidding or permit purposes.
Engineer: HARRY W. ISENSEE III, P.E.
P.E. Serial No.: 144401
Date: MAY 2026

CITY OF HOUSTON
HOUSTON PUBLIC WORKS

SCOTT STREET NO. 1 LIFT STATION REHABILITATION

MECHANICAL

DRY WEATHER PUMP STATION DEMOLITION SECTION

WBS NUMBER	FOR CITY OF HOUSTON USE ONLY
R–000267–127A–4	
DRAWING SCALE	
AS NOTED	
CITY OF HOUSTON PM	
TAHA LOTIA	
DWG NO. 1–M–2	
SHEET NO. 56 OF 220	

K:\00050\00050-0099-01 Scott St. No. 1 Lift Station Rehabilitation - Phase II Design\2.Design Phase\CAD\MECH.dwg

0 1 2 3 4 5 ORIGINAL SCALE IN INCHES FOR REDUCED PLANS

VALVES, FITTINGS AND ACCESSORIES SCHEDULE

No.	DESCRIPTION	No.	DESCRIPTION	No.	DESCRIPTION	No.	DESCRIPTION
1	24" x 24" x 20" Tee, FJ	11	20" x 20" x 20" Tee, FJ	21	20" Dismantling Joint (DJ-01-301)	31	3" Air & Vacuum Valve (AVV-01-201) and 3" Ball Valve (BV-01-201)
2	24" Dismantling Joint (DJ-01-001)	12	20" 45° Bend, FJ	22	20" Swing Check Valve (SCV-01-401)	32	1/2" Pressure Indicator (PI-01-301) and 1/2" Ball Valve (BV-01-302)
3	24" Knife Gate Valve (KGV-01-001)	13	20" Swing Check Valve (SCV-01-101)	23	20" Knife Gate Valve (KGV-01-401)	33	3" Air & Vacuum Valve (AVV-01-301) and 3" Ball Valve (BV-01-301)
4	24" Dismantling Joint (DJ-01-003)	14	20" Knife Gate Valve (KGV-01-101)	24	20" Dismantling Joint (DJ-01-401)	34	1/2" Pressure Indicator (PI-01-401) and 1/2" Ball Valve (BV-01-402)
5	24" Knife Gate Valve (KGV-01-002)	15	20" Dismantling Joint (DJ-01-101)	25	6" 90° Bend, FJ	35	3" Air & Vacuum Valve (AVV-01-401) and 3" Ball Valve (BV-01-401)
6	24" Dismantling Joint (DJ-01-002)	16	20" Swing Check Valve (SCV-01-201)	26	4" Duckbill Check Valve (DBV-01-001)	36	3" Air Release Valve (ARV-01-001) and 3" Ball Valve (BV-01-001)
7	24" Knife Gate Valve (KGV-01-003)	17	20" Knife Gate Valve (KGV-01-201)	27	4" Duckbill Valve (DBV-01-002)	37	Pressure Indicator Transmitter (PIT-01-001) and 1/2" Ball Valve (BV-01-002)
8	24" x 20" Concentric Reducer, FJ	18	20" Dismantling Joint (DJ-01-201)	28	1/2" Pressure Indicator (PI-01-101) and 1/2" Ball Valve (BV-01-102)	38	3" Air Release Valve (ARV-01-002) and 3" Ball Valve (BV-01-003)
9	24" x 24" x 20" Lateral Wye, FJ	19	20" Swing Check Valve (SCV-01-301)	29	3" Air & Vacuum Valve (AVV-01-101) and 3" Ball Valve (BV-01-101)	39	Pressure Indicator Transmitter (PIT-01-002) and 1/2" Ball Valve (BV-01-004)
10	20" 90° Bend, FJ	20	20" Knife Gate Valve (KGV-01-301)	30	1/2" Pressure Indicator (PI-01-201) and 1/2" Ball Valve (BV-01-202)	40	24"x24"x24" Tee, FJ

ITEMS OF WORK (ALTERNATE BID ITEMS)

No.	DESCRIPTION
A1	Install 6" Drain Inlet w/P-Trap and 4" DI Drain Line w/ wall collars.
A2	Install 6" DI-Drain (Force Main) w/ Wall Penetration.

ITEMS OF WORK

No.	DESCRIPTION
1	Hand clean and apply a cold galvanizing spray on the instrument handhole cover.
2	Hand clean and apply a cold galvanizing spray on the manhole cover.

NOTES:

1. The access hatch requires a rigid safety grate fall prevention system with less than three inch (3") openings between the grate and any edge of the hatch opening. Access hatches shall be aluminum per Specification 11311.
2. Contractor shall verify the minimum required pump access hatch size with the Pump Manufacturer. The minimum size is shown.
3. Contractor to field locate the location of existing cable holders so as to confirm unimpeded installation of pumps and safety grating.
4. Contractor shall apply protective coating to all proposed above ground and below ground piping. Riser and hatches shall be labeled to correspond to the respective pump number.
5. All existing structures, dimensions, locations, elevations, and materials shown are based on City of Houston's record drawings. Contractor shall field verify existing dimensions, locations, elevations, and materials as required to complete the work and as directed by the Engineer. Field verification shall be incidental to the work.
6. All aluminum grating, handrails, and access hatches shall receive shop applied powder coating. Access hatches shall be COH color forest green. Rigid safety grating shall be color COH safety yellow. All other grating shall be color COH safety yellow. Handrails shall be color Safety yellow.
7. Access hatch covers shall receive field applied stenciling for equipment identification.
8. Process piping shall receive field applied stenciling for process fluid, and flow direction.
9. Knife Gate Valves are to remain 70% open for normal operation.
10. All pressure gauges and air release valves shall be stainless steel.
11. Contractor shall stencil directional arrows and process line identification on all pipes at no greater than 10-foot interval.
12. Slide gate wall thimbles shall be cast in place in proposed concrete wall.

NO.	DATE	REVISIONS	APP.

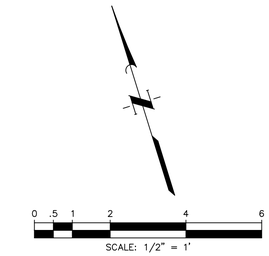

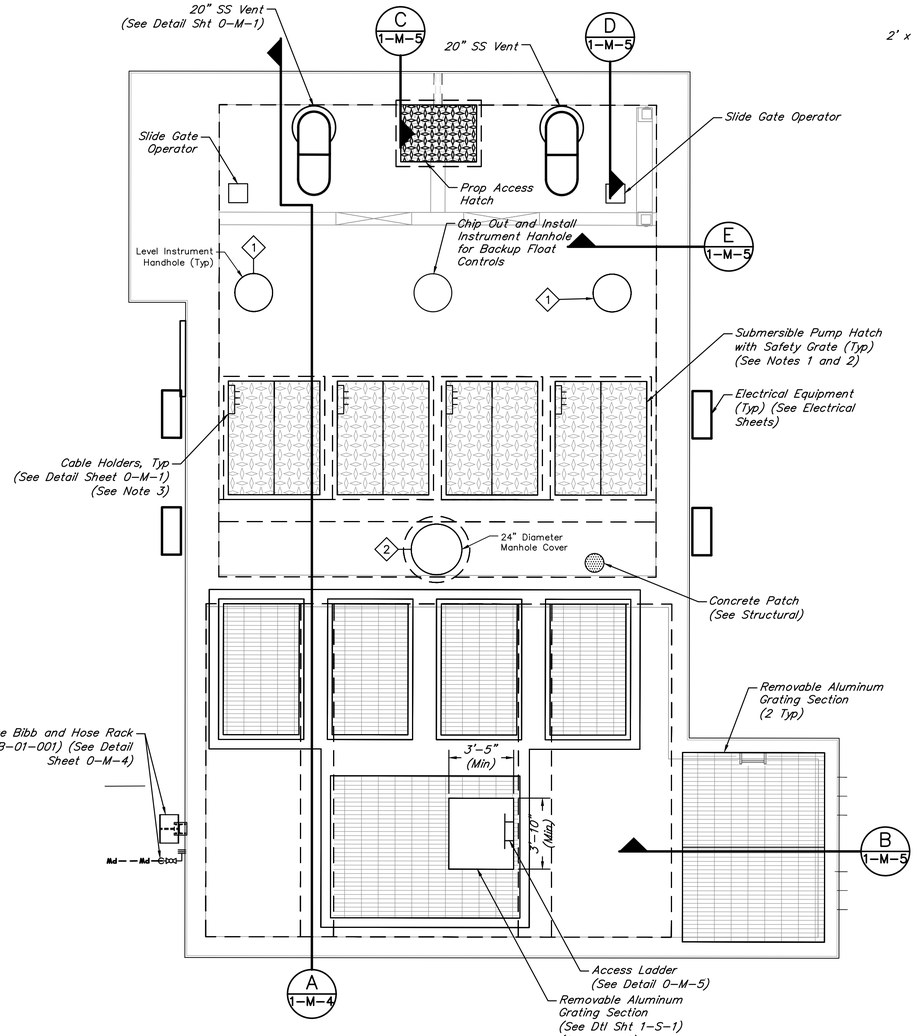

UPPER PLAN
SCALE: 1/4" = 1'-0"

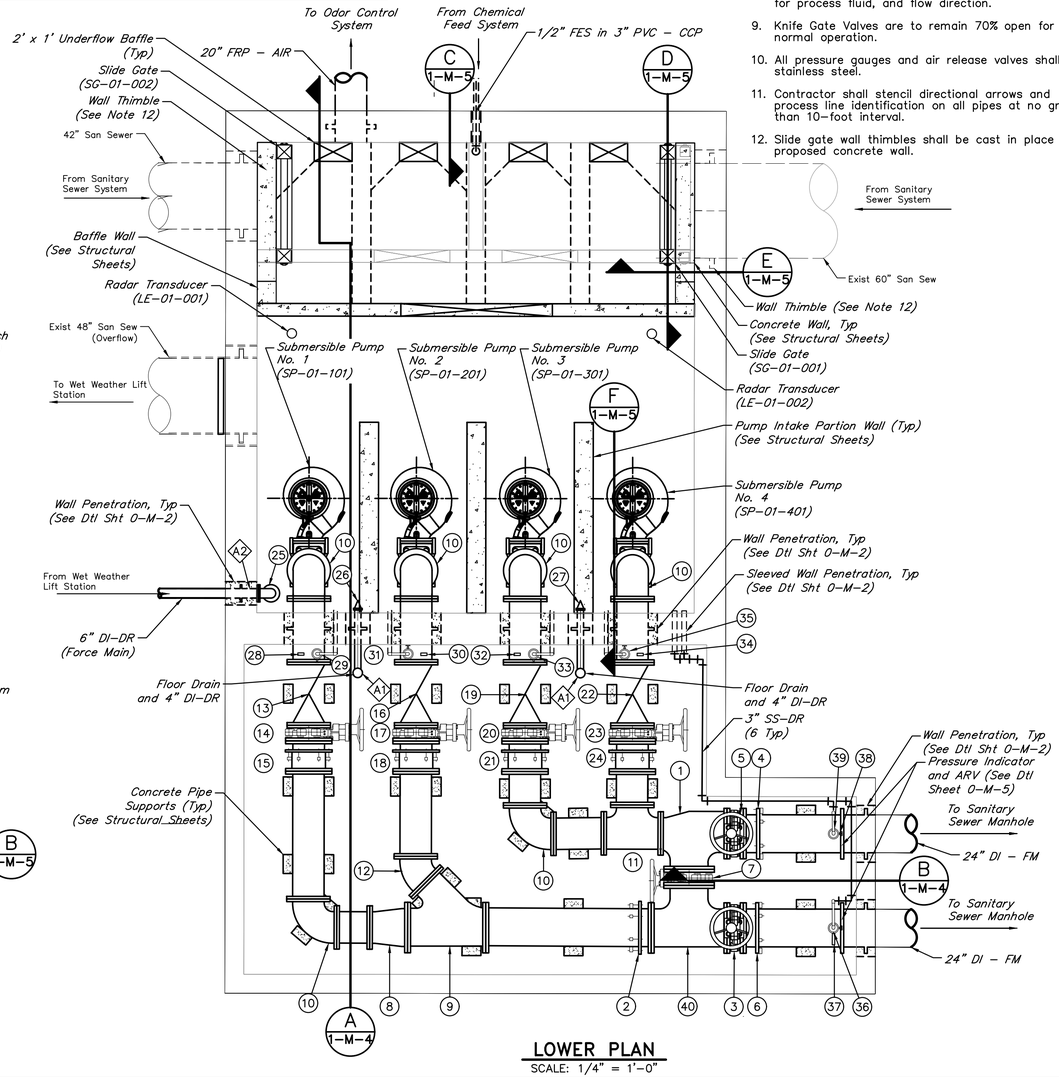

LOWER PLAN
SCALE: 1/4" = 1'-0"

QUIDDITY
Texas Board of Professional Engineers and Land Surveyors Reg. No. F-23290
6330 West Loop South, Suite 150 • Bellaire, TX 77401 • 713.777.5337

JOB NO: 00050-0099-01 DATE: 1/19/2026

APPROVED BY:

DATE: MAY 2026

DESIGNED BY: CTHOMAS

DRAWN BY: CHUDSON

SURVEYED BY:

FB NO. XXXXXX

INTERIM REVIEW
Not intended for construction, bidding or permit purposes.
Engineer: HARRY W. ISENSEE III, P.E.
P.E. Serial No.: 144401
Date: MAY 2026

CITY OF HOUSTON
HOUSTON PUBLIC WORKS

SCOTT STREET NO. 1 LIFT STATION REHABILITATION
MECHANICAL

DRY WEATHER PUMP SECTION IMPROVEMENT PLAN

WBS NUMBER	FOR CITY OF HOUSTON USE ONLY
R-000267-127A-4	
DRAWING SCALE	
AS NOTED	
CITY OF HOUSTON PM	
TAHA LOTIA	
DWG NO. 1-M-3	
SHEET NO. 57 OF 220	

K:\00050\00050-0099-01 Scott St. No. 1 Lift Station Rehabilitation - Phase II Design\2 Design Phase\CAD\MECH.dwg

0 1 2 3 4 5 ORIGINAL SCALE IN INCHES FOR REDUCED PLANS

NO.	DATE	REVISIONS	APP.

VALVES, FITTINGS AND ACCESSORIES SCHEDULE

No.	DESCRIPTION	No.	DESCRIPTION
1	20" 90° Bend, FJ	8	20" Concentric Reducer, FJ (See Note 6)
2	20" Dismantling Joint (DJ–01–101)	9	24" x 24" x 20" Tee, FJ
3	20" Knife Gate Valve (KGV–01–101)	10	24" Dismantling Joint (DJ–01–003)
4	20" Swing Check Valve (SCV–01–101)	11	24" Knife Gate Valve (KGV–01–003)
5	3" Air & Vacuum Valve (AVV–01–101) and 3" Ball Valve (BV–01–101)	12	1/2" Ball Valve (BV–01–004) and Pressure Indicator Transmitter (PIT–01–002)
6	6" 90° Bend, FJ	13	3" Air Release Valve (ARV–01–002) and 3" Ball Valve (BV–01–003)
7	4" Duckbill Check Valve (DBV–01–001)	14	Pressure Indicator (PI–01–101) and 1/2" Ball Valve (BV–01–102)

ITEMS OF WORK (ALTERNATE BID ITEMS)

No.	DESCRIPTION
A1	Install 6" Drain Inlet w/ P–Trap and 4" DI Drain Line w/ wall collars.
A2	Install 6" DI–Drain (Force Main) w/ Wall Penetration.

NOTES:

1. Pump shelf shall be required as per pump manufacturer. Access hatches shall be aluminum per Specification 11311.
2. The access hatch requires a rigid safety grate fall prevention system with less than three inch (3") openings between the grate and any edge of the hatch opening.
3. Contractor shall verify the minimum required pump access hatch size with the Pump manufacturer. The minimum size is shown.
4. Provide a PVC coated weight at the end of the stainless steel float controls cable.
5. Contractor shall coordinate with supplied Pump Manufacturer to ensure grout in wet well is outside the minimum required clearance area for the pumps.
6. Coordinate reducer with approved pump manufacturer submittal and base elbows.
7. Contractor shall field verify horizontal and vertical location of exist 42" and 60" wall penetrations and submit field findings for review by Engineer prior to submittal and fabrication of proposed gates.
8. Contractor shall field locate the location of the proposed cable holders so as to ensure unimpeded installation of pumps and operation of safety grating.
9. Contractor shall apply protective coating to all proposed above ground and below ground piping per project specifications. Contractor shall label pump access hatches, riser piping and force main header piping in the valve vault correspond to the respective pump number as applicable.
10. All existing structures, dimensions, locations, elevations, and materials shown are based on City of Houston's record drawings. Contractor shall field verify existing dimensions, locations, elevations, and materials as required to complete the work and as directed by the Engineer. Field verification shall be incidental to the work.
11. All aluminum grating, handrails, and access hatches shall receive shop applied powder coating. Access hatches shall be COH color forest green. Rigid safety grating shall be color COH safety yellow. All other grating shall be color COH safety yellow. Handrails shall be color COH safety yellow.
12. Access hatch covers shall receive field applied stenciling for equipment identification.
13. Process piping shall receive field applied stenciling for process fluid, and flow direction.
14. All pressure gauges and air release valves shall be stainless steel.
15. Contractor shall stencil directional arrows and process line identification on all pipes at no greater than 10–foot interval.

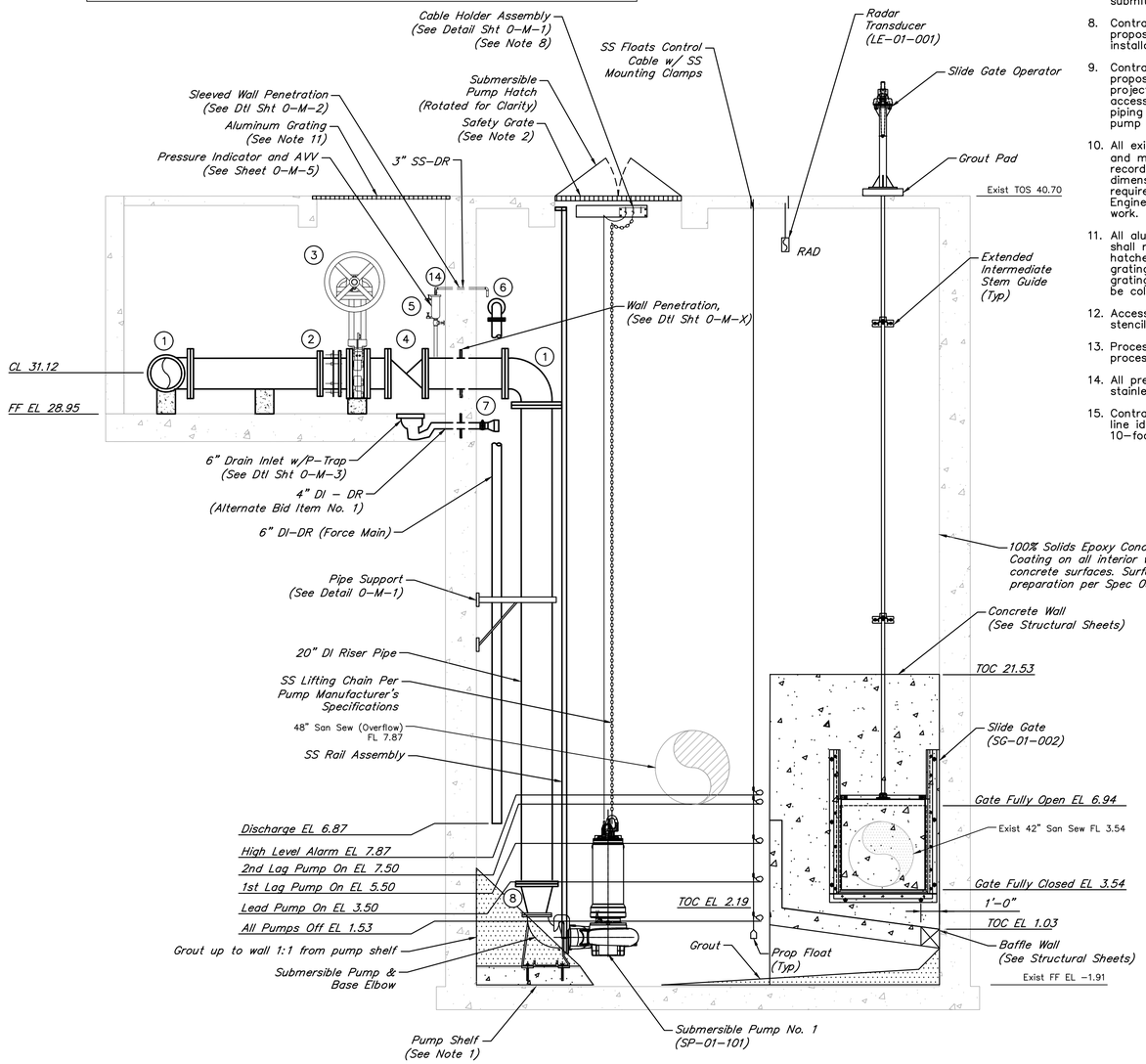

SECTION A
SCALE: 1/4" = 1'–0"

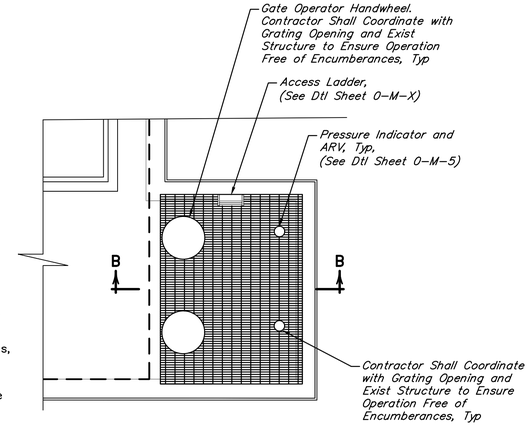

MID LEVEL GRATING PLAN
SCALE: 1/4" = 1'–0"

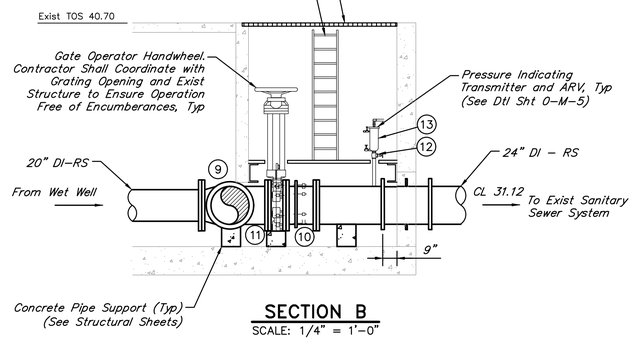

SECTION B
SCALE: 1/4" = 1'–0"

DRY WEATHER LIFT STATION OPERATION TABLE

RISING LEVEL CYCLE – DRY WEATHER PUMPS		
ELEVATION	ACTION	PUMP(S) IN OPERATION
3.50	LEAD DRY PUMP TURNS ON	LEAD DRY PUMP ON
5.50	SECOND DRY PUMP TURNS ON	LEAD & SECOND PUMP ON
7.50	THIRD DRY PUMP TURNS ON	LEAD, SECOND, & THIRD PUMPS ON
7.87	HIGH WATER ALARM ON	LEAD, SECOND, & THIRD PUMPS ON
7.87	HIGH WATER ALARM	HIGH WATER ALARM SOUND

FALLING LEVEL CYCLE – DRY WEATHER PUMPS		
ELEVATION	ACTION	PUMP(S) IN OPERATION
7.87	HIGH LEVEL ALARM TURNS OFF	LEAD, SECOND, & THIRD PUMPS ON
1.53	ALL PUMPS TURN OFF	ALL PUMPS STOPPED

QUIDDITY
Texas Board of Professional Engineers and Land Surveyors Reg. No. F-23290
6330 West Loop South, Suite 150 • Bellaire, TX 77401 • 713.777.5337

JOB NO: 00050–0099–01 DATE: 1/19/2026

APPROVED BY:

DATE: MAY 2026

DESIGNED BY: CTHOMAS

DRAWN BY: CHUDSON

SURVEYED BY:

FB NO. XXXXXX

INTERIM REVIEW
Not intended for construction, bidding or permit purposes.
Engineer: HARRY W. ISENSEE III, P.E.
P.E. Serial No.: 144401
Date: MAY 2026

CITY OF HOUSTON
HOUSTON PUBLIC WORKS

SCOTT STREET NO. 1 LIFT STATION REHABILITATION

MECHANICAL

DRY WEATHER PUMP STATION IMPROVEMENTS SECTION 1 OF 2

WBS NUMBER	FOR CITY OF HOUSTON USE ONLY
R–000267–127A–4	
DRAWING SCALE	
AS NOTED	
CITY OF HOUSTON PM	
TAHA LOTIA	
DWG NO. I–M–4	
SHEET NO. 58 OF 220	

K:\00050\00050-0099-01 Scott St. No. 1 Lift Station Rehabilitation - Phase II Design\2 Design Phase\CAD\MECH.dwg

0 1 2 3 4 5 ORIGINAL SCALE IN INCHES FOR REDUCED PLANS

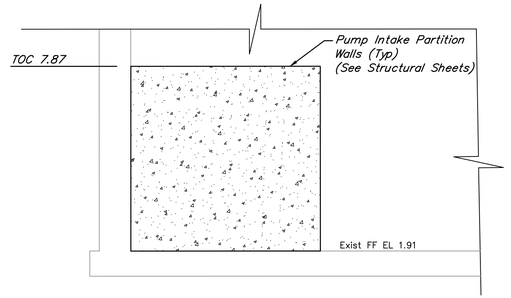

SECTION F
SCALE: 1/4" = 1'-0"

NO.	DATE	REVISIONS	APP.

NOTES:

1. Contractor shall field verify horizontal and vertical location of exist 42" and 60" wall penetrations and submit field findings for review by Engineer prior to submittal and fabrication of proposed gates.
2. All existing structures, dimensions, locations, elevations, and materials shown are based on City of Houston's record drawings. Contractor shall field verify existing dimensions, locations, elevations, and materials as required to complete the work and as directed by the Engineer. Field verification shall be incidental to the work.
3. All aluminum grating, handrails, and access hatches shall receive shop applied powder coating. Access hatches shall be COH color forest green. Rigid safety grating shall be color COH safety yellow. All other grating shall be color COH safety yellow. Handrails shall be color COH safety yellow.
4. Slide gate wall thimbles shall be cast in place in proposed concrete wall.

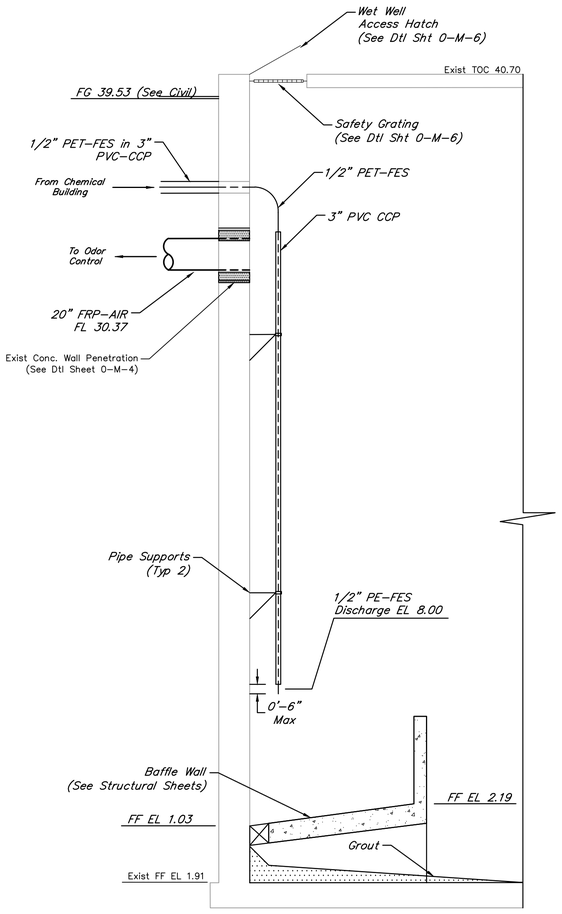

SECTION C
SCALE: 1/4" = 1'-0"

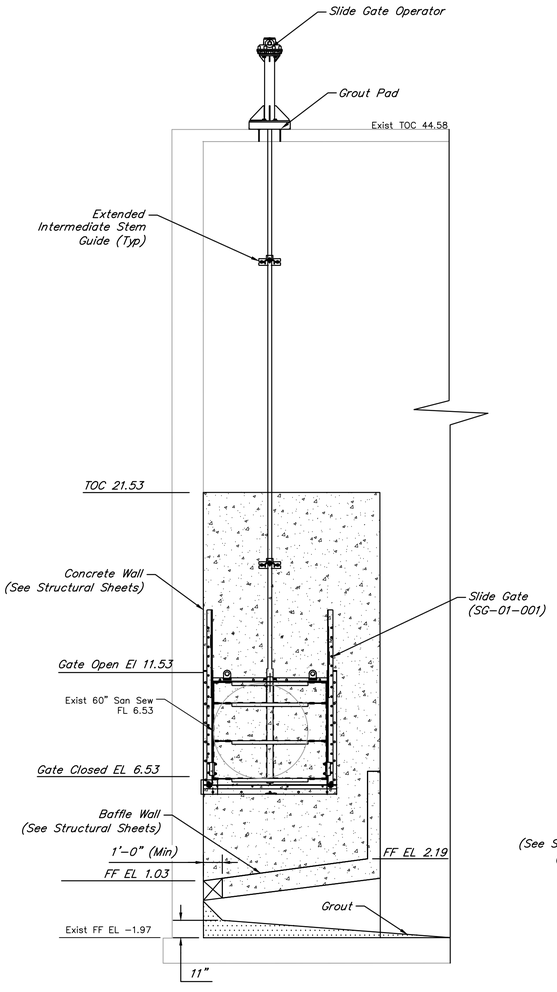

SECTION D
SCALE: 1/4" = 1'-0"

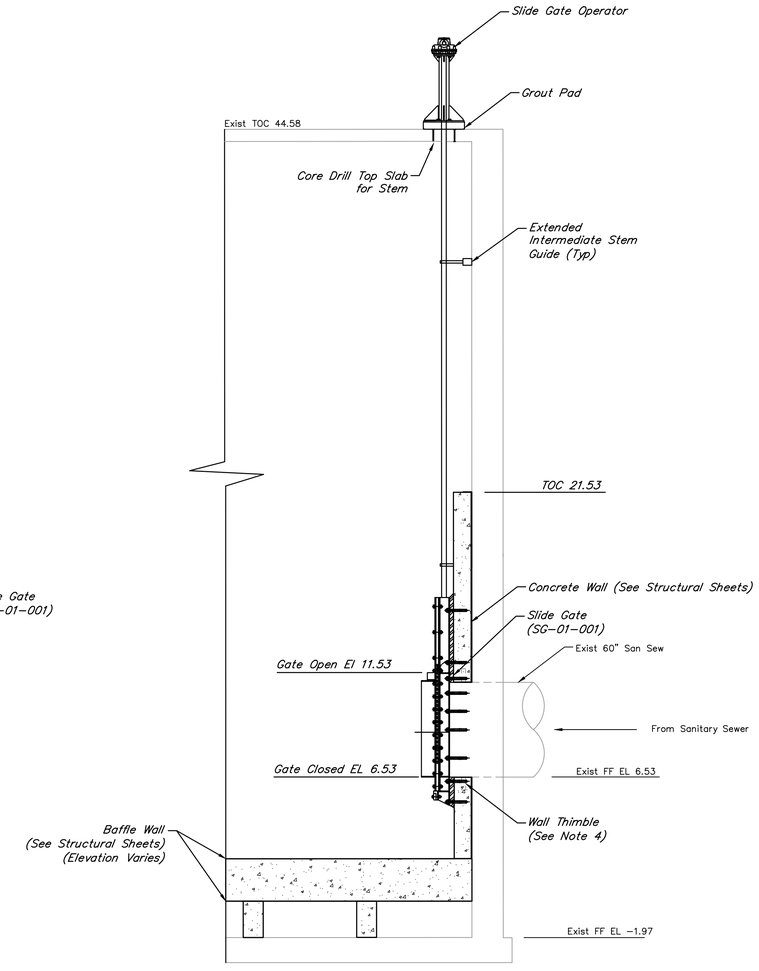

SECTION E
SCALE: 1/4" = 1'-0"

QUIDDITY
Texas Board of Professional Engineers and Land Surveyors Reg. No. F-23290
6330 West Loop South, Suite 150 • Bellaire, TX 77401 • 713.777.5337

JOB NO: 00050-0099-01 DATE: 1/19/2026

APPROVED BY:

DATE: MAY 2026

DESIGNED BY: CTHOMAS

DRAWN BY: CHUDSON

SURVEYED BY:

FB NO. XXXXXX

INTERIM REVIEW
Not intended for construction, bidding or permit purposes.
Engineer: HARRY W. ISENSEE III, P.E.
P.E. Serial No.: 144401
Date: MAY 2026

CITY OF HOUSTON
HOUSTON PUBLIC WORKS

SCOTT STREET NO. 1 LIFT STATION REHABILITATION
MECHANICAL
DRY WEATHER PUMP STATION IMPROVEMENTS SECTION 2 OF 2

WBS NUMBER	FOR CITY OF HOUSTON USE ONLY
R-000267-127A-4	
DRAWING SCALE	
AS NOTED	
CITY OF HOUSTON PM	
TAHA LOTIA	
DWG NO. 1-M-5	
SHEET NO. 59 OF 220	

K:\00050\00050-0099-01 Scott St. No. 1 Lift Station Rehabilitation - Phase II Design\2.Design Phase\CAD\MECH.dwg

0 1 2 3 4 5 ORIGINAL SCALE IN INCHES FOR REDUCED PLANS

NO.	DATE	REVISIONS	APP.

PUMP DATA TABLE – DRY WEATHER PUMPS

PUMP CHARACTERISTICS	PUMP No. 1*	PUMP No. 2*	PUMP No. 3*
MOTOR DATA			
NOMINAL SIZE (HP)	50	50	50
MAX SPEED (RPM)	1,175	1,175	1,175
SOLIDS PASSAGE MIN SPHERE (IN)	3	3	3
CAPACITY (GPM)			
DESIGN	5,093	5,093	5,093
RUNOUT	7,106	7,106	7,106
DISCHARGE HEAD (FT)			
DESIGN	31.4	31.4	31.4
RUNOUT	7.24	7.24	7.24
SHUT–OFF	85.0	85.0	85.0
EFFICIENCY (%) DESIGN	70	70	70
NPSHR (FT)			
DESIGN	23.91	23.91	23.91
RUNOUT	42.0	42.0	42.0

* Pump duty point represents single pump when three pumps operate in parallel.

City of Houston
Scott Street Lift Station Improvements
Dry Weather Pump Station (22.0 MGD) - System A

The pump curves shown are based on Flygt N3202 LT 3 ~ 616 pumps and adjusted for riser losses based on C=100. The system curve represents approximately 60 linear feet of 20-inch (20") DIP riser piping and 200 linear feet of 24-inch (24") force main.

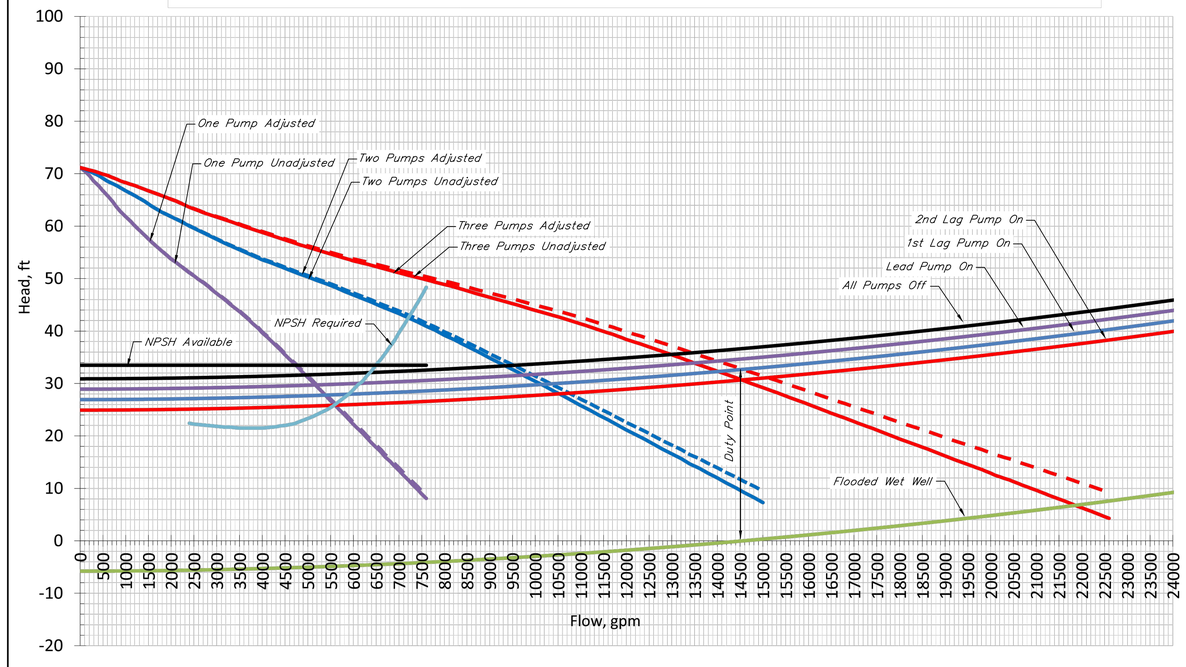

NOTES:

1. System A represents the system head condition with one 24" force main out of service and all flow pumped through one 24" force main with valve KGV–01–003 and the corresponding knife gate valve fully open and the other fully closed (KGV–01–001/KGV–01–002).

QUIDDITY
Texas Board of Professional Engineers and Land Surveyors Reg. No. F-23290
6330 West Loop South, Suite 150 • Bellaire, TX 77401 • 713.777.5337

JOB NO: 00050–0099–01 DATE: 1/19/2026

APPROVED BY:

DATE: MAY 2026

DESIGNED BY: CTHOMAS

DRAWN BY: CHUDSON

SURVEYED BY:

FB NO. XXXXX

INTERIM REVIEW
Not intended for construction, bidding or permit purposes.
Engineer: HARRY W. ISENSEE III, P.E.
P.E. Serial No.: 144401
Date: MAY 2026

CITY OF HOUSTON
HOUSTON PUBLIC WORKS

SCOTT STREET NO. 1
LIFT STATION REHABILITATION
MECHANICAL
DRY WEATHER PUMP STATION
PUMP DATA AND CURVES
SHEET 1 OF 2

WBS NUMBER	FOR CITY OF HOUSTON USE ONLY
R–000267–127A–4	
DRAWING SCALE	
AS NOTED	
CITY OF HOUSTON PM	
TAHA LOTIA	
DWG NO. 1–M–6	
SHEET NO. 60 OF 220	

K:\00050\00050-0099-01 Scott St. No. 1 Lift Station Rehabilitation - Phase II Design\2 Design Phase\CAD\MECH.dwg

ORIGINAL SCALE IN INCHES FOR REDUCED PLANS

NO.	DATE	REVISIONS	APP.

City of Houston
Scott Street Lift Station Improvements
Dry Weather Pump Station (22.0 MGD) - System B1

The pump curves shown are based on Flygt N3202 LT 3 ~ 616 pumps and adjusted for riser losses based on C=100. The system curve represents approximately 60 linear feet of 20-inch (20") DIP riser piping and approximately 200 linear feet of 24-inch (24") DIP force main.

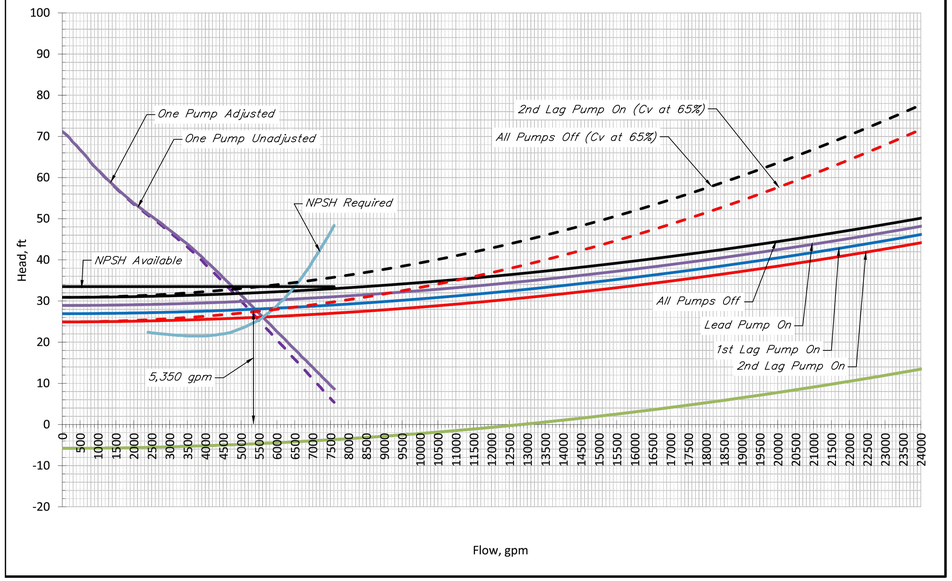

City of Houston
Scott Street Lift Station Improvements
Dry Weather Pump Station (22.0 MGD) - System B2

The pump curves shown are based on Flygt N3202 LT 3 ~ 616 pumps and adjusted for riser losses based on C=100. The system curve represents approximately 60 linear feet of 20-inch (20") DIP riser piping and approximately 200 linear feet of 24-inch (24") DIP force main.

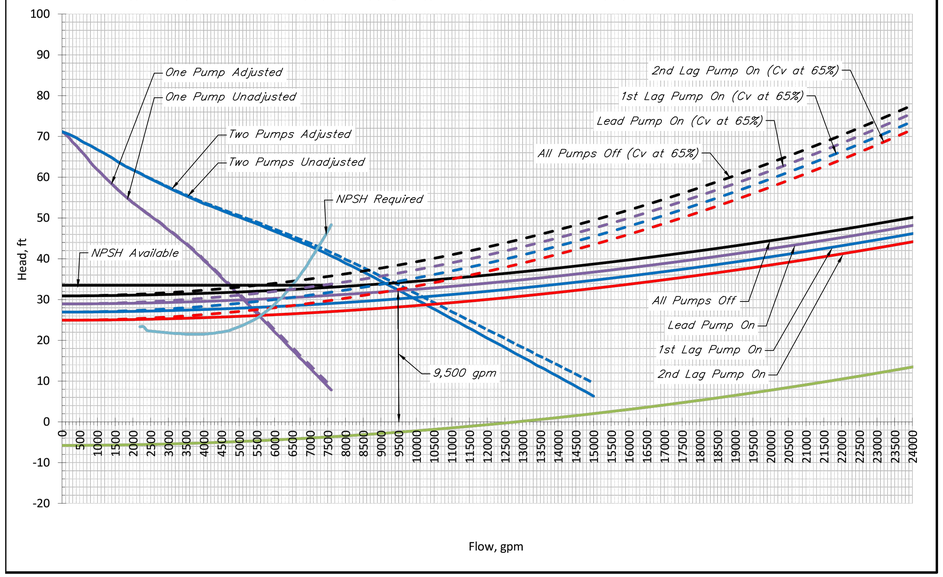

NOTES:

1. System B represents normal operating condition with two force mains in service with valve KG-01-003 normally closed. System B1 represents system head condition with one pump pumping throough one force main. System B2 represents head condition with two pumps pumping through one force main. Position of valves KGV-01-001 and KGV-01-002 shall be set in field during start up testing. Design valve position per design pump selection are identified on system curves shown this sheet.

City of Houston
Scott Street Lift Station Improvements
Dry Weather Pump Station (22.0 MGD) - System B1

The pump curves shown are based on KSB KRT K 350-503/6010XNG-K pumps and adjusted for riser losses based on C=100. The system curve represents approximately 60 linear feet of 20-inch (20") DIP riser piping and 200 linear feet of 24-inch (24") force main. The system curve also assumes one of the dual 24-inch force mains is out of service and all flow is conveyed by the one 24-inch force main still in service.

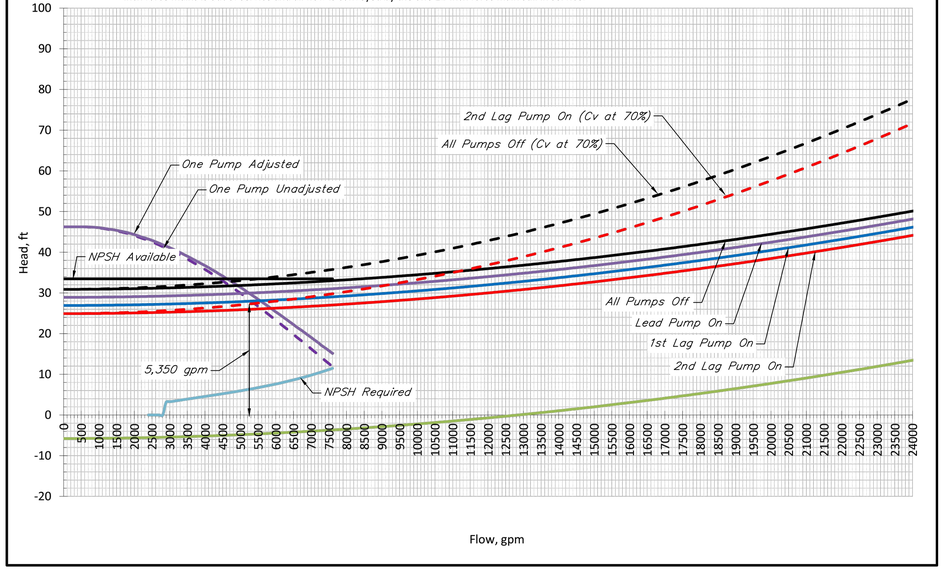

City of Houston
Scott Street Lift Station Improvements
Dry Weather Pump Station (22.0 MGD) - System B2

The pump curves shown are based on KSB KRT K 350-503/6010XNG-K pumps and adjusted for riser losses based on C=100. The system curve represents approximately 60 linear feet of 20-inch (20") DIP riser piping and 200 linear feet of 24-inch (24") force main. The system curve also assumes one of the dual 24-inch force mains is out of service and all flow is conveyed by the one 24-inch force main still in service.

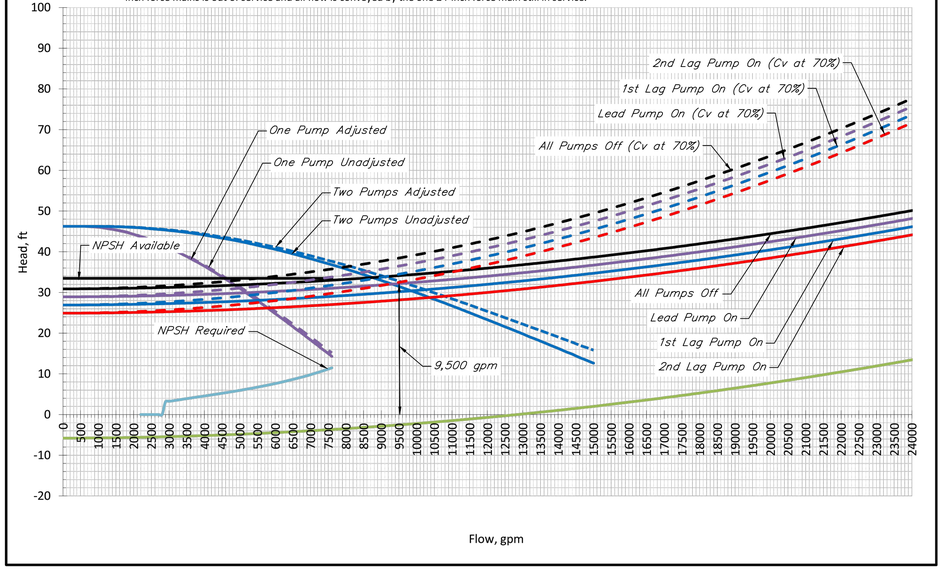

QUIDDITY
Texas Board of Professional Engineers and Land Surveyors Reg. No. F-23290
6330 West Loop South, Suite 150 • Bellaire, TX 77401 • 713.777.5337

JOB NO: 00050-0099-01 DATE: 1/19/2026

APPROVED BY:

DATE: MAY 2026

DESIGNED BY: CTHOMAS

DRAWN BY: CHUDSON

SURVEYED BY:

FB NO. XXXXXX

INTERIM REVIEW
Not intended for construction, bidding or permit purposes.
Engineer: HARRY W. ISENSEE III, P.E.
P.E. Serial No.: 144401
Date: MAY 2026

CITY OF HOUSTON
HOUSTON PUBLIC WORKS

SCOTT STREET NO. 1 LIFT STATION REHABILITATION

MECHANICAL

DRY WEATHER PUMP STATION PUMP DATA AND CURVES SHEET 2 OF 2

WBS NUMBER	FOR CITY OF HOUSTON USE ONLY
R-000267-127A-4	
DRAWING SCALE	
AS NOTED	
CITY OF HOUSTON PM	
TAHA LOTIA	
DWG NO. 1-M-7	
SHEET NO. 61 OF 220	

K:\00050\00050-0099-01 Scott St. No. 1 Lift Station Rehabilitation - Phase II Design\2 Design Phase\CAD\MECH.dwg

0 1 2 3 4 5 ORIGINAL SCALE IN INCHES FOR REDUCED PLANS

NO.	DATE	REVISIONS	APP.

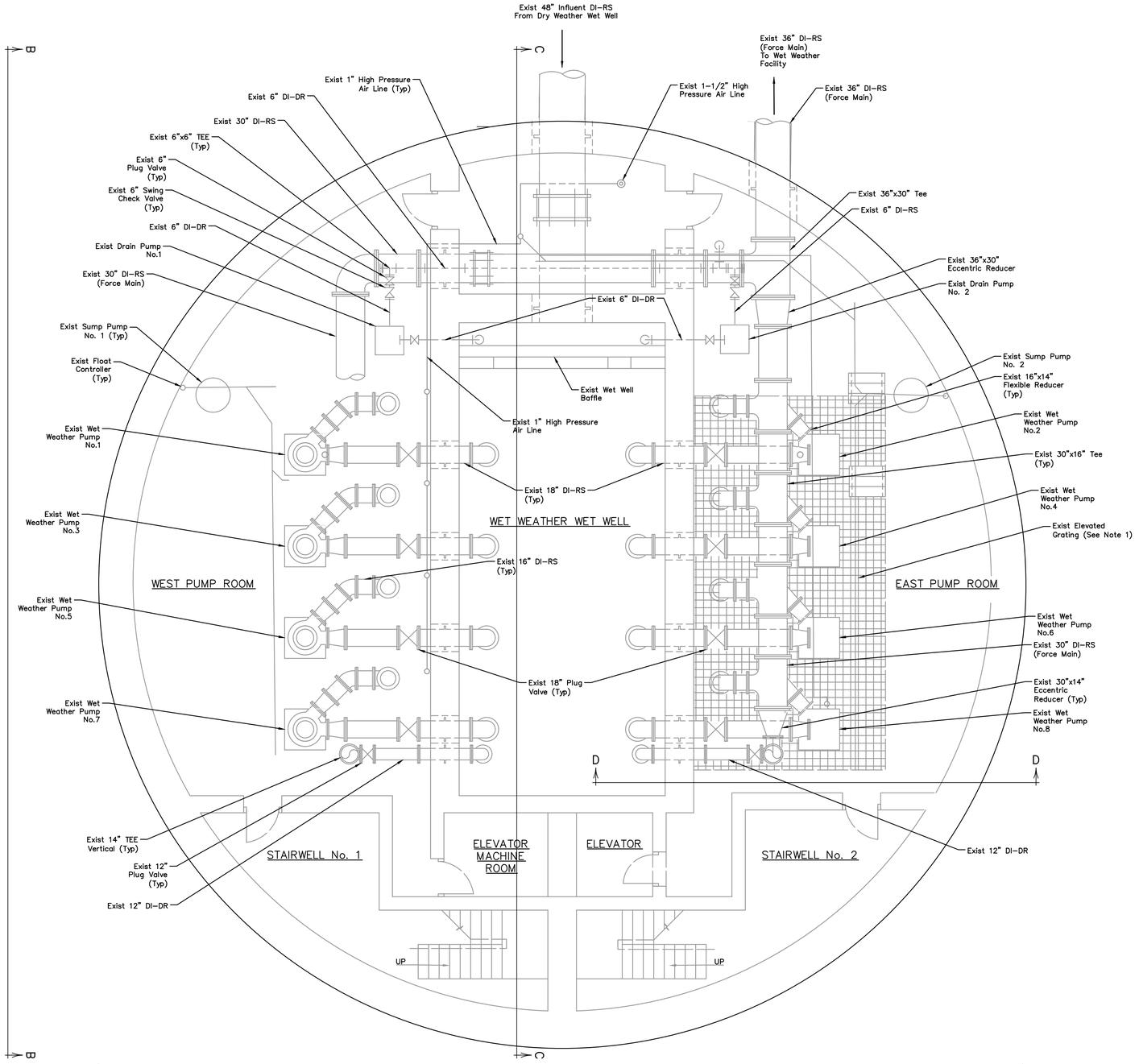

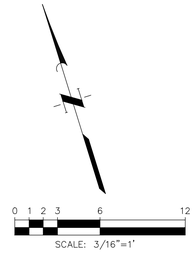

NOTES:

1. Grating not shown on West Pump Room only for Clarification. West Room Grating is a Mirrored Set-Up from East Pump Room.

QUIDDITY

Texas Board of Professional Engineers and Land Surveyors Reg. No. F-23290
6330 West Loop South, Suite 150 • Bellaire, TX 77401 • 713.777.5337

JOB NO: 00050-0099-01 DATE: 1/19/2026

APPROVED BY:

DATE: MAY 2026

DESIGNED BY: MBMITCHELL

DRAWN BY: JMMUSSO

SURVEYED BY:

FB NO. XXXXXX

INTERIM REVIEW
Not intended for construction, bidding or permit purposes.
Engineer: WILLIAM R. SAGASTIZADO, P.E.
P.E. Serial No.: 125999
Date: MAY 2026

CITY OF HOUSTON
HOUSTON PUBLIC WORKS

SCOTT STREET NO. 1 LIFT STATION REHABILITATION
MECHANICAL

WET WEATHER LIFT STATION LOWER LEVEL-EXISTING

WBS NUMBER
R-000267-127A-4
DRAWING SCALE
AS NOTED
CITY OF HOUSTON PM
TAHA LOTIA
DWG NO. 2-M-1
SHEET NO. 62 OF 220

FOR CITY OF HOUSTON USE ONLY

K:\00050\00050-0099-01 Scott St. No. 1 Lift Station Rehabilitation - Phase II Design\2 Design Phase\CAD\MECH-1.dwg

0 1 2 3 4 5

ORIGINAL SCALE IN INCHES FOR REDUCED PLANS

NO.	DATE	REVISIONS	APP.

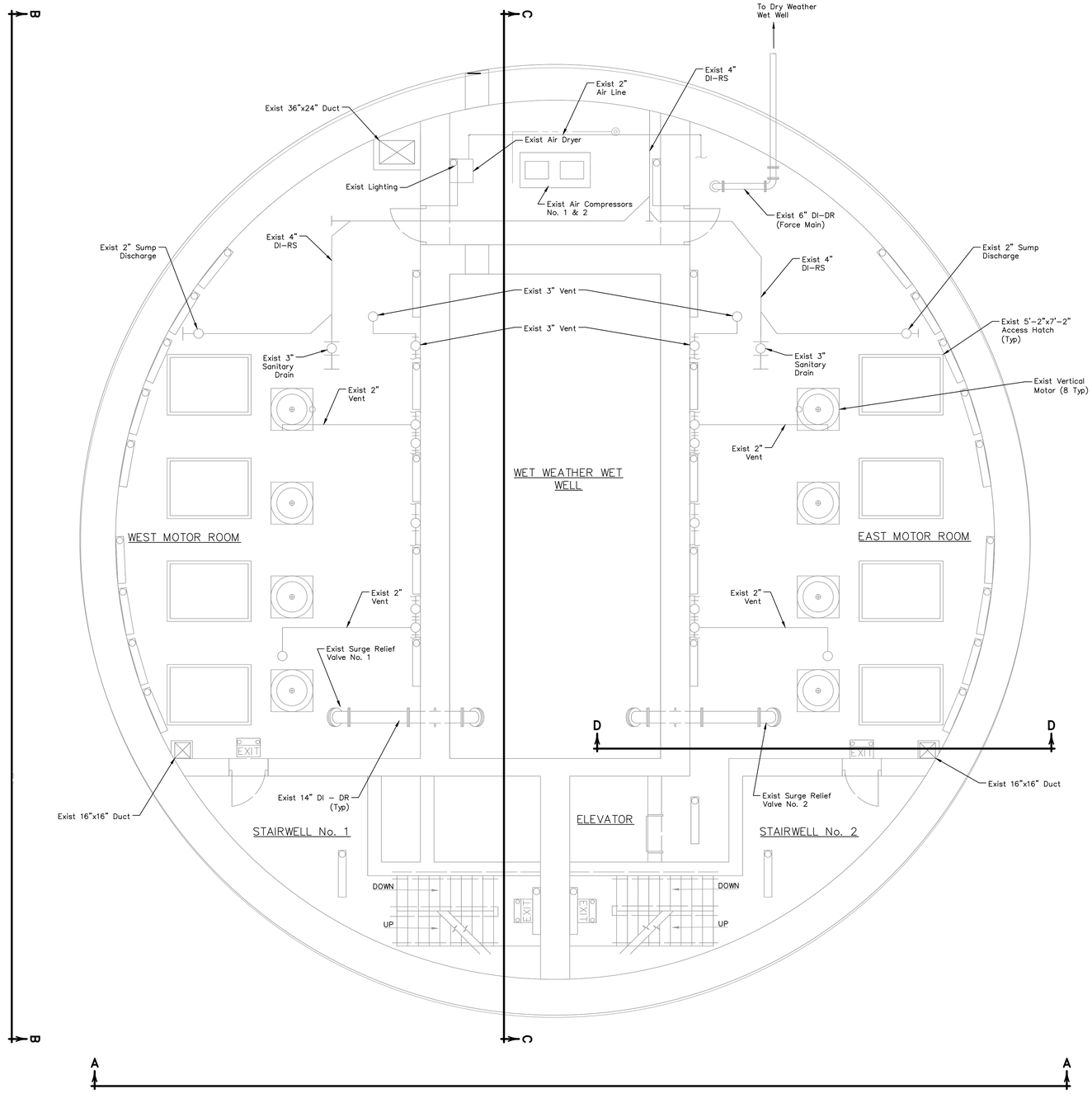

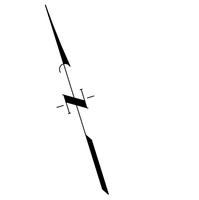

0 1 2 3 6 12

SCALE: 3/16"=1'

QUIDDITY

Texas Board of Professional Engineers and Land Surveyors Reg. No. F-23290
6330 West Loop South, Suite 150 • Bellaire, TX 77401 • 713.777.5337

JOB NO: 00050-0099-01 DATE: 1/19/2026

APPROVED BY:

DATE: MAY 2026

DESIGNED BY: MBMITCHELL

DRAWN BY: JMMUSSO

SURVEYED BY:

FB NO. XXXXXX

INTERIM REVIEW

Not intended for construction, bidding or permit purposes.

Engineer: WILLIAM R. SAGASTIZADO, P.E.

P.E. Serial No.: 125999

Date: MAY 2026

CITY OF HOUSTON

HOUSTON PUBLIC WORKS

SCOTT STREET NO. 1 LIFT STATION REHABILITATION

MECHANICAL

WET WEATHER LIFT STATION MEZZANINE LEVEL-EXISTING

WBS NUMBER
R-000267-127A-4
DRAWING SCALE
AS NOTED
CITY OF HOUSTON PM
TAHA LOTIA
DWG NO. 2-M-2
SHEET NO. 63 OF 220

FOR CITY OF HOUSTON USE ONLY

K:\00050\00050-0099-01 Scott St. No. 1 Lift Station Rehabilitation - Phase II Design\2 Design Phase\CAD\MECH-3.dwg

0 1 2 3 4 5

ORIGINAL SCALE IN INCHES FOR REDUCED PLANS

NO.	DATE	REVISIONS	APP.

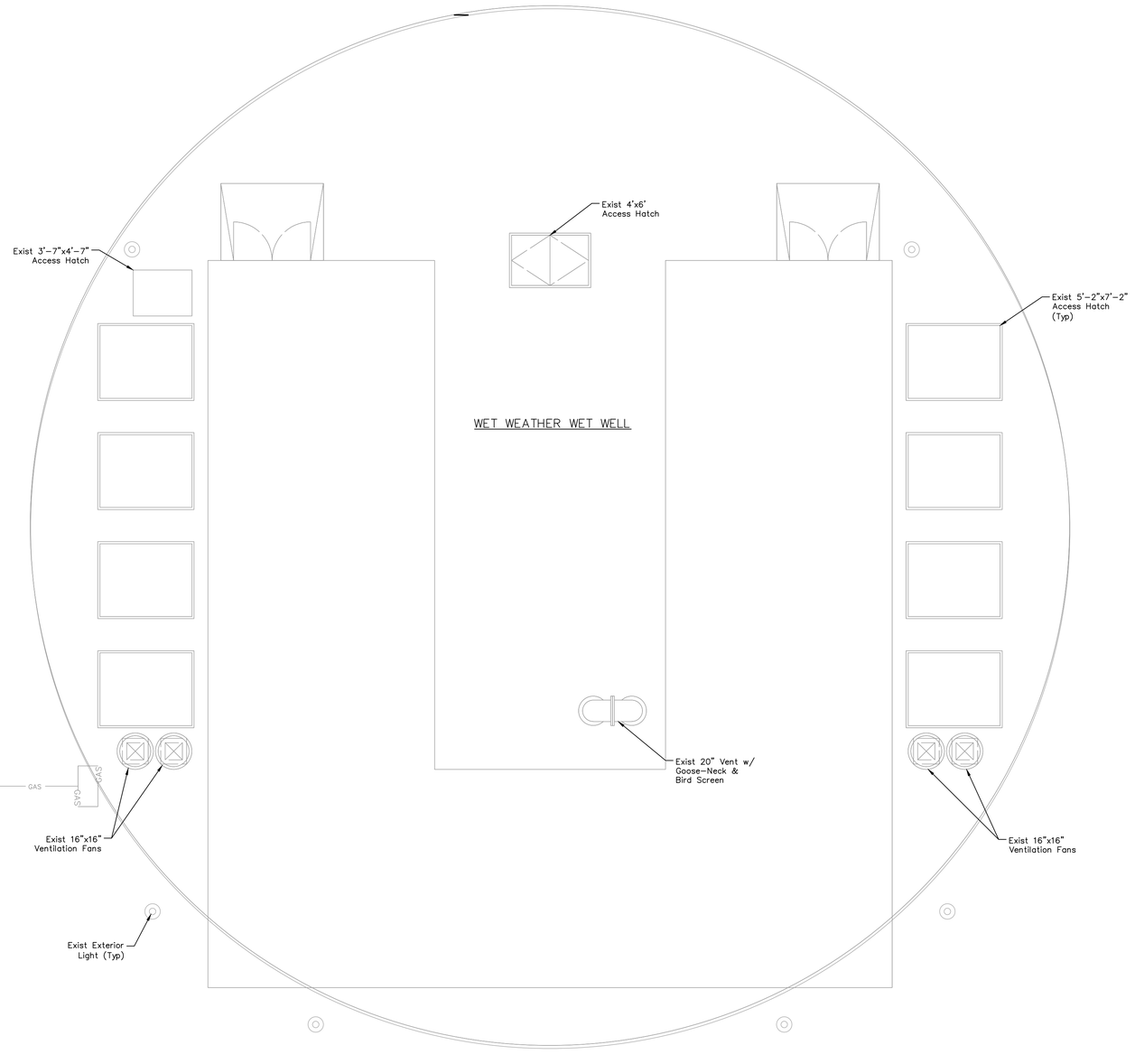

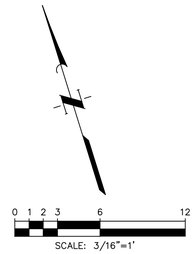

NOTES:

1. Interior Excluded for Clarity.

QUIDDITY

Texas Board of Professional Engineers and Land Surveyors Reg. No. F-23290
6330 West Loop South, Suite 150 • Bellaire, TX 77401 • 713.777.5337

JOB NO: 00050-0099-01 DATE: 1/19/2026

APPROVED BY:

DATE: MAY 2026

DESIGNED BY: MBMITCHELL

DRAWN BY: JMMUSSO

SURVEYED BY:

FB NO. XXXXX

INTERIM REVIEW
Not intended for construction, bidding or permit purposes.
Engineer: WILLIAM R. SAGASTIZADO, P.E
P.E. Serial No.: 125999
Date: MAY 2026

CITY OF HOUSTON
HOUSTON PUBLIC WORKS

SCOTT STREET NO. 1
LIFT STATION REHABILITATION
MECHANICAL

WET WEATHER LIFT STATION
GROUND LEVEL
EXTERIOR – EXISTING

WBS NUMBER
R-000267-127A-4
DRAWING SCALE
AS NOTED
CITY OF HOUSTON PM
TAHA LOTIA
DWG NO. 2-M-3
SHEET NO. 64 OF 220

FOR CITY OF HOUSTON USE ONLY

K:\00050\00050-0099-01 Scott St. No. 1 Lift Station Rehabilitation - Phase II Design\2 Design Phase\CAD\MECH-4.dwg

0 1 2 3 4 5

ORIGINAL SCALE IN INCHES FOR REDUCED PLANS

NO.	DATE	REVISIONS	APP.

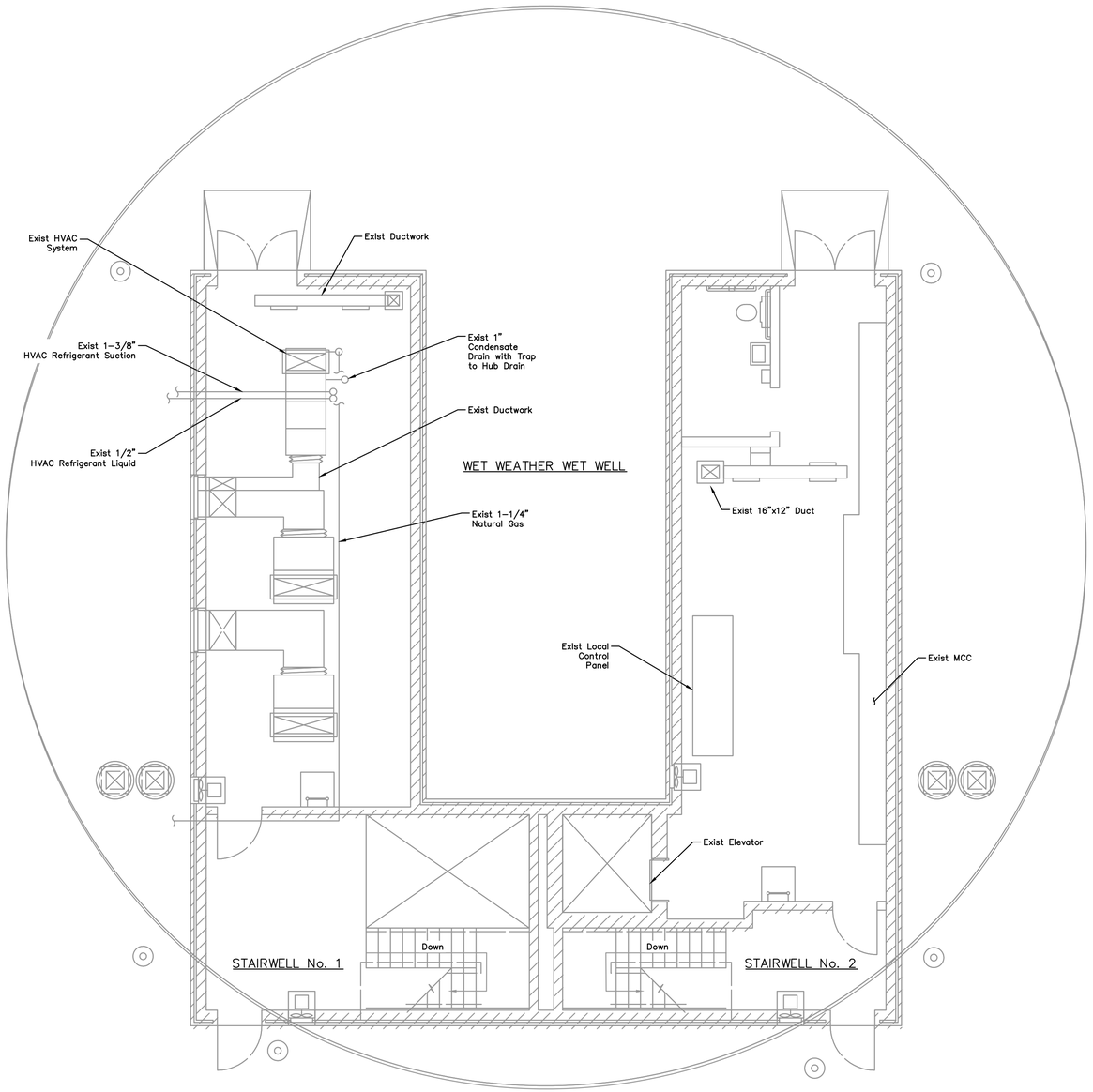

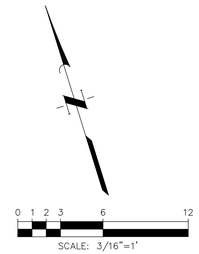

NOTES:

1. Exterior Excluded for Clarity.

QUIDDITY

Texas Board of Professional Engineers and Land Surveyors Reg. No. F-23290
6330 West Loop South, Suite 150 • Bellaire, TX 77401 • 713.777.5337

JOB NO: 00050–0099–01 DATE: 1/19/2026

APPROVED BY:

DATE: MAY 2026

DESIGNED BY: MBMITCHELL

DRAWN BY: JMMUSSO

SURVEYED BY:

FB NO. XXXXXX

INTERIM REVIEW

Not intended for construction, bidding or permit purposes.

Engineer: WILLIAM R. SAGASTIZADO, P.E

P.E. Serial No.: 125999

Date: MAY 2026

CITY OF HOUSTON

HOUSTON PUBLIC WORKS

SCOTT STREET NO. 1 LIFT STATION REHABILITATION

MECHANICAL

WET WEATHER LIFT STATION GROUND LEVEL INTERIOR–EXISTING

WBS NUMBER	FOR CITY OF HOUSTON USE ONLY
R–000267–127A–4	
DRAWING SCALE	
AS NOTED	
CITY OF HOUSTON PM	
TAHA LOTIA	
DWG NO. 2–M–4	
SHEET NO. 65 OF 220	

K:\00050\00050-0099-01 Scott St. No. 1 Lift Station Rehabilitation - Phase II Design\2 Design Phase\CAD\MECH-4.dwg

ORIGINAL SCALE IN INCHES FOR REDUCED PLANS

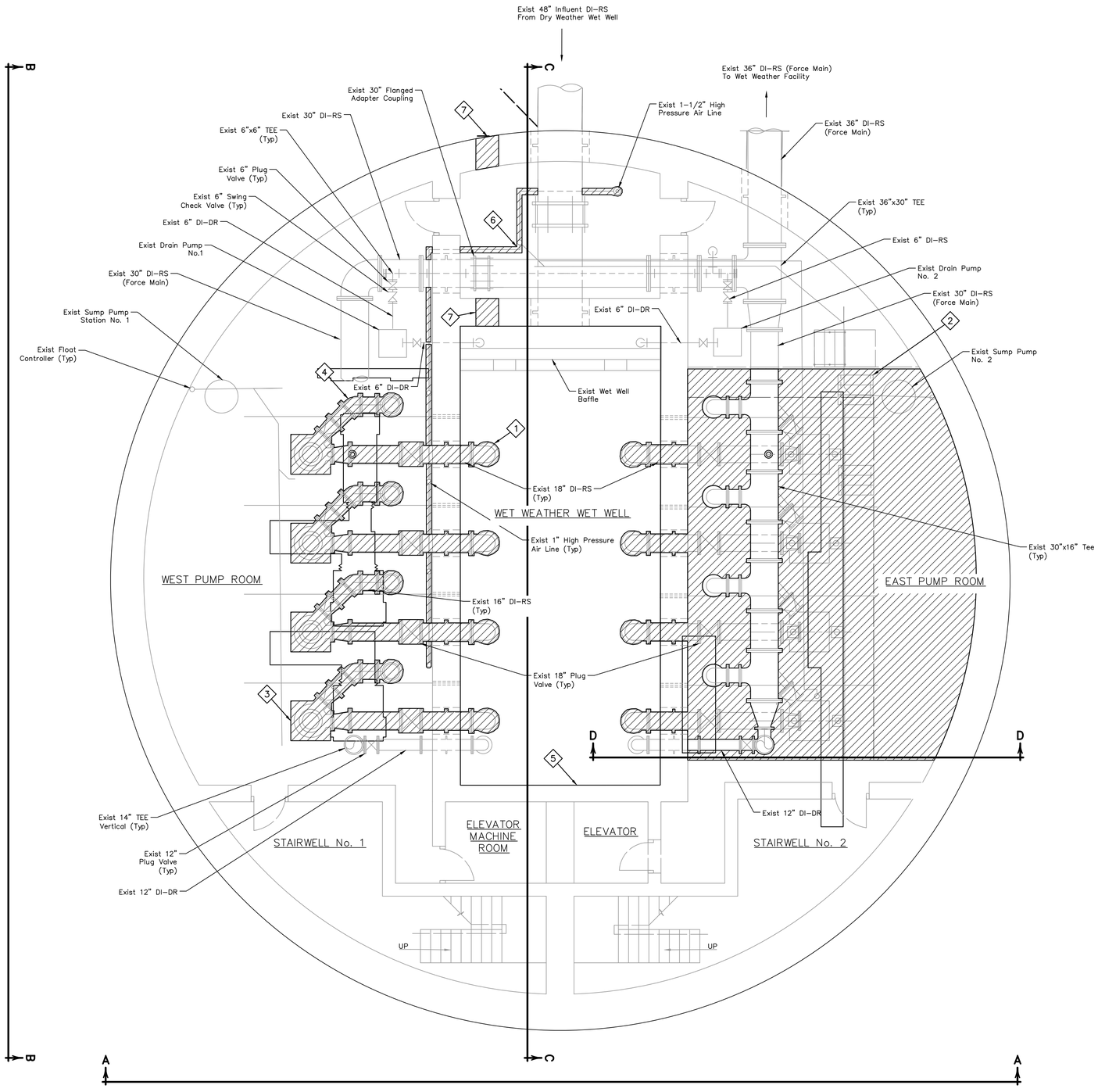

ITEMS OF WORK

No.	DESCRIPTION
1	Demolish Existing 18" Suction Piping, Wall Thimble, Valves, Supports, and Hardware Related to the Wet Weather Pumps (Typ 8).
2	Demolish all Grating Supports, Handrails and Miscellaneous Metals Related to the Elevated Platform. Contractor Shall Grind Down Anchors and Cover with Grout.
3	Demolish Existing Wet Weather Pumps, Associated Concrete Supports, Small Diameter Piping, Shaft, Controls, Conduit, Wire and Related Accessories.
4	Demolish Existing 16" Discharge Piping to the Vertical Portion of the Pipe, Valves, Small Diameter Air Piping to the Flow Control valves, Supports and Miscellaneous Metals.
5	Demolish Existing T-LOK Liner Inside of the Wet Well.
6	Demolish Existing Air Compressor, High Pressure Air Piping, and Electrical Controls.
7	Contractor to Core Through the Existing Walls to Allow for Construction of the 8-inch Force Main Drain line.

NO.	DATE	REVISIONS	APP.

0 1 2 3 6 12

SCALE: 3/16"=1'

LEGEND:

DEMOLISH

NOTES:

1. City of Houston retains first right of refusal on all demolition items. Contractor shall coordinate with City of Houston Wastewater OPS on all equipment to be salvaged. Contractor shall deliver salvaged items to a location as determined by City of Houston Wastewater OPS.

QUIDDITY
Texas Board of Professional Engineers and Land Surveyors Reg. No. F-23290
6330 West Loop South, Suite 150 • Bellaire, TX 77401 • 713.777.5337

JOB NO: 00050-0099-01 DATE: 1/19/2026

APPROVED BY:

DATE: MAY 2026

DESIGNED BY: MBMITCHELL

DRAWN BY: JMMUSSO

SURVEYED BY:

FB NO. XXXXXX

INTERIM REVIEW
Not intended for construction, bidding or permit purposes.
Engineer: WILLIAM R. SAGASTIZADO, P.E.
P.E. Serial No.: 125999
Date: MAY 2026

CITY OF HOUSTON
HOUSTON PUBLIC WORKS

SCOTT STREET NO. 1 LIFT STATION REHABILITATION

MECHANICAL

WET WEATHER LIFT STATION LOWER LEVEL-DEMOLITION

WBS NUMBER
R-000267-127A-4
DRAWING SCALE
AS NOTED
CITY OF HOUSTON PM
TAHA LOTIA
DWG NO. 2-M-5
SHEET NO. 66 OF 220

FOR CITY OF HOUSTON USE ONLY

K:\00050\00050-0099-01 Scott St. No. 1 Lift Station Rehabilitation - Phase II Design\2 Design Phase\CAD\MECH-1.dwg

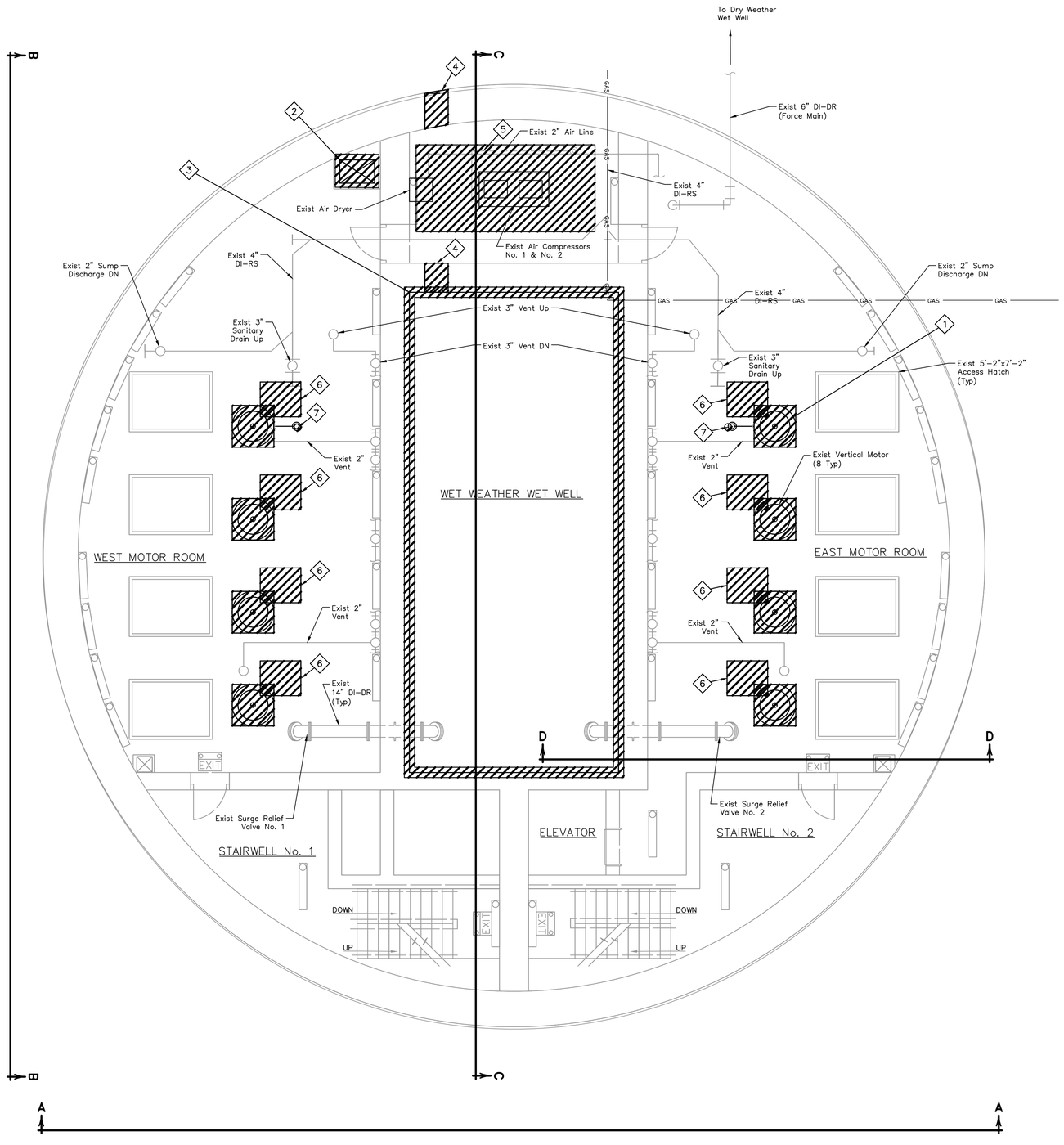

ITEMS OF WORK

No.	DESCRIPTION
1	Demolish the Existing Motors from the Wet Weather Pumps, Conduit, Wire Associated with the Motor.
2	Demolish Existing Air Ducts, Supports, and Hardware.
3	Demolish T-LOK Liner Inside Wet Well.
4	Contractor to Core through the Existing Walls to Allow for Construction of the FRP Duct Works.
5	Demolish Existing Air Compressor, High Pressure Air Piping, and Electrical Controls.
6	Contractor to install Access Hole with Removable Grating.
7	Contractor to Cut Hole for Header Air Release Valve Piping in Line with Centerline of 30" Header Below.

NO.	DATE	REVISIONS	APP.

0 1 2 3 6 12
SCALE: 3/16"=1'

LEGEND:

DEMOLISH

GENERAL NOTES:

1. City of Houston retains first right of refusal on all demolition items. Contractor shall coordinate with City of Houston Wastewater OPS on all equipment to be salvaged. Contractor shall deliver salvaged items to a location as determined by City of Houston Wastewater OPS.

QUIDDITY
Texas Board of Professional Engineers and Land Surveyors Reg. No. F-23290
6330 West Loop South, Suite 150 • Bellaire, TX 77401 • 713.777.5337

JOB NO: 00050-0099-01 DATE: 1/19/2026

APPROVED BY:

DATE: MAY 2026

DESIGNED BY: MBMITCHELL

DRAWN BY: JMMUSSO

SURVEYED BY:

FB NO. XXXXXX

INTERIM REVIEW
Not intended for construction, bidding or permit purposes.
Engineer: WILLIAM R. SAGASTIZADO, P.E.
P.E. Serial No.: 125999
Date: MAY 2026

CITY OF HOUSTON
HOUSTON PUBLIC WORKS

SCOTT STREET NO. 1
LIFT STATION REHABILITATION
MECHANICAL

WET WEATHER LIFT STATION MEZZANINE LEVEL-DEMOLITION

WBS NUMBER
R-000267-127A-4
DRAWING SCALE
AS NOTED
CITY OF HOUSTON PM
TAHA LOTIA
DWG NO. 2-M-6
SHEET NO. 67 OF 220

FOR CITY OF HOUSTON USE ONLY

0 1 2 3 4 5

ORIGINAL SCALE IN INCHES FOR REDUCED PLANS

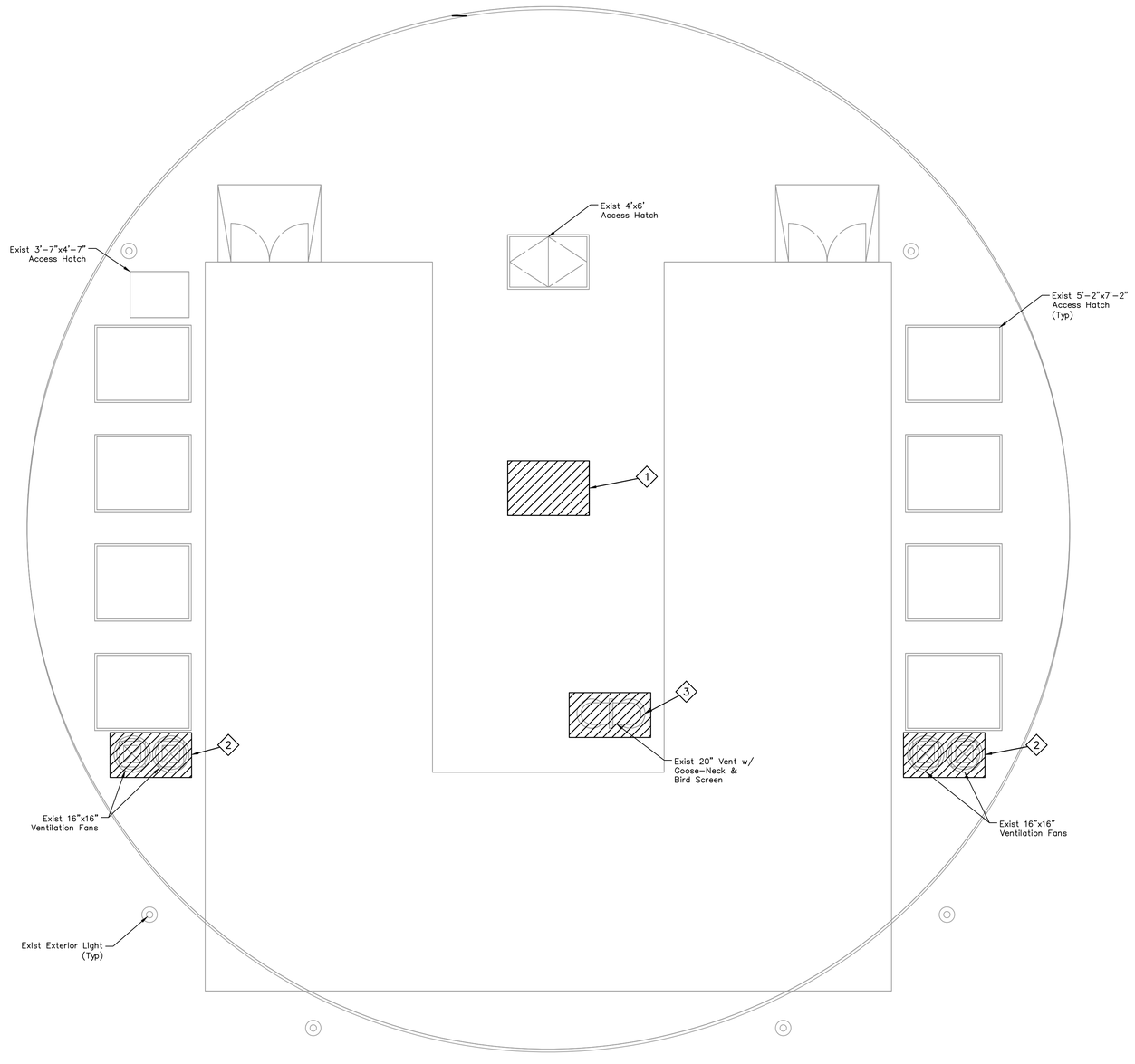

ITEMS OF WORK

No.	DESCRIPTION
1	Contractor Shall Saw Cut the Existing Top Slab. See Structural Sheets.
2	Disconnect and Demolish Existing Exterior Ventilation Fans.
3	Demolish Existing 20" Vent with Goose-neck & Bird Screen.

NO.	DATE	REVISIONS	APP.

0 1 2 3 6 12

SCALE: 3/16"=1'

NOTES:

1. Interior Excluded for Clarity.
2. City of Houston retains first right of refusal on all demolition items. Contractor shall coordinate with City of Houston Wastewater OPS on all equipment to be salvaged. Contractor shall deliver salvaged items to a location as determined by City of Houston Wastewater OPS.

LEGEND:

DEMOLISH

QUIDDITY

Texas Board of Professional Engineers and Land Surveyors Reg. No. F-23290
6330 West Loop South, Suite 150 • Bellaire, TX 77401 • 713.777.5337

JOB NO: 00050-0099-01 DATE: 1/19/2026

APPROVED BY:

DATE: MAY 2026

DESIGNED BY: MBMITCHELL

DRAWN BY: JMMUSSO

SURVEYED BY:

FB NO. XXXXXX

INTERIM REVIEW
Not intended for construction, bidding or permit purposes.
Engineer: WILLIAM R. SAGASTIZADO, P.E
P.E. Serial No.: 125999
Date: MAY 2026

CITY OF HOUSTON
HOUSTON PUBLIC WORKS

SCOTT STREET NO. 1 LIFT STATION REHABILITATION

MECHANICAL

WET WEATHER LIFT STATION GROUND LEVEL EXTERIOR – DEMOLITION

WBS NUMBER
R-000267-127A-4
DRAWING SCALE
AS NOTED
CITY OF HOUSTON PM
TAHA LOTIA
DWG NO. 2-M-7
SHEET NO. 68 OF 220

FOR CITY OF HOUSTON USE ONLY

K:\00050\00050-0099-01 Scott St. No. 1 Lift Station Rehabilitation - Phase II Design\2 Design Phase\CAD\MECH-4.dwg

0 1 2 3 4 5 ORIGINAL SCALE IN INCHES FOR REDUCED PLANS

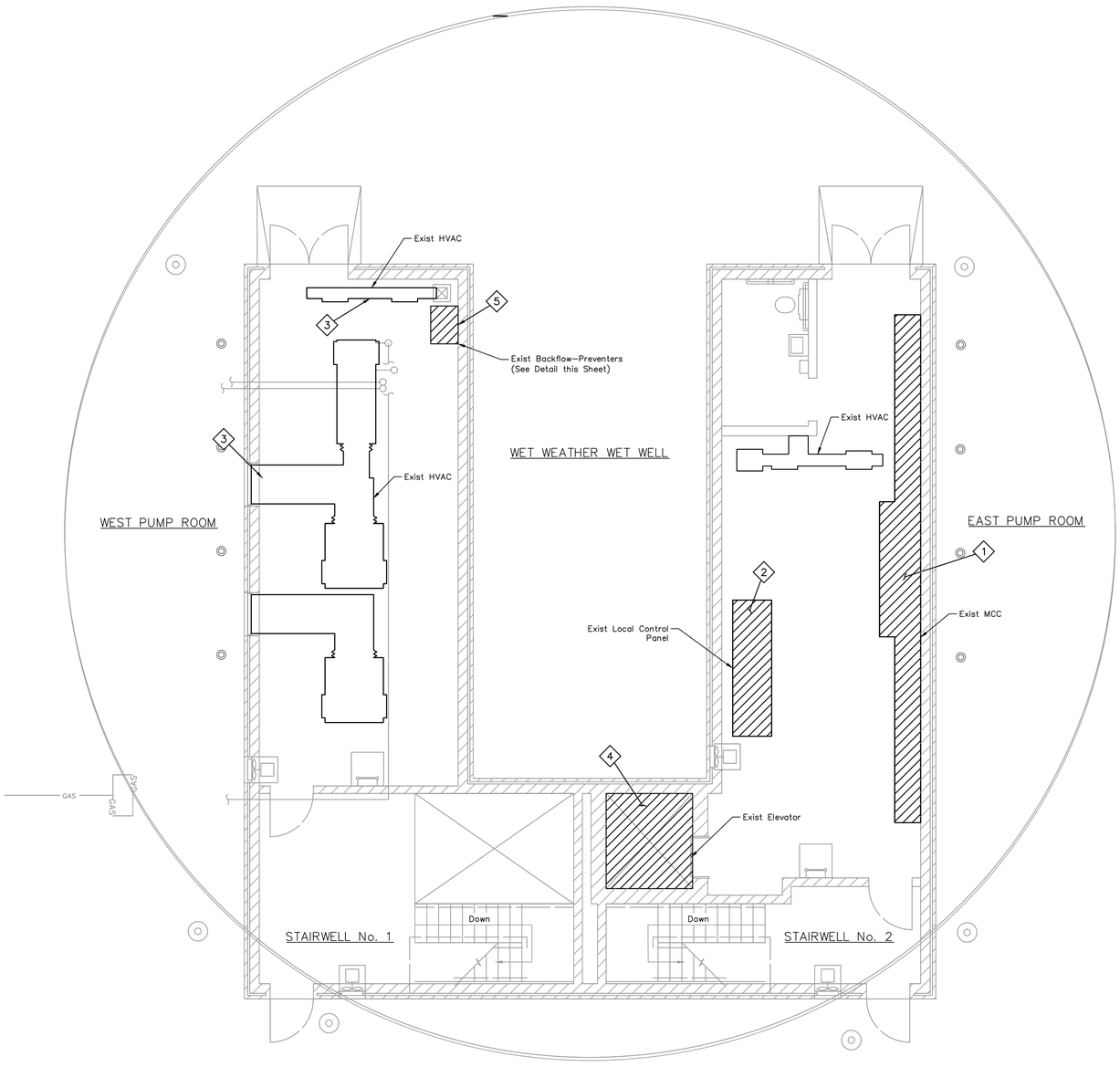

ITEMS OF WORK

No.	DESCRIPTION
1	Demolish Existing MCC Conduit and Wiring Related to the MCC.
2	Demolish Existing Local Control Conduit and Wiring Related to the Local Control Panel.
3	See HVAC Sheets.
4	Decommission and Dismantle Existing Elevator.
5	Remove and replace existing backflow–preventers.

NO.	DATE	REVISIONS	APP.



0 1 2 3 6 12

SCALE: 3/16"=1'

NOTES:

1. Exterior Excluded for Clarity.
2. City of Houston retains first right of refusal on all demolition items. Contractor shall coordinate with City of Houston Wastewater OPS on all equipment to be salvaged. Contractor shall deliver salvaged items to a location as determined by City of Houston Wastewater OPS.

LEGEND:

DEMOLISH

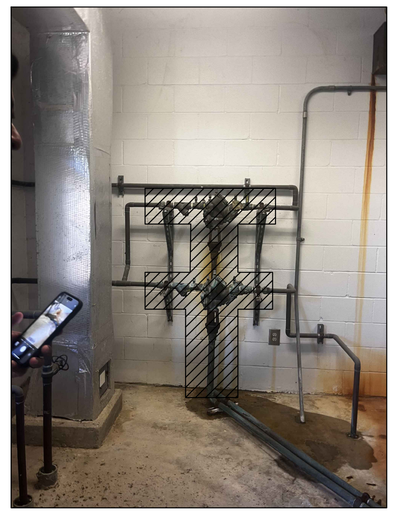

EXISTING BACKFLOW – PREVENTERS DETAIL
NOT TO SCALE

QUIDDITY
Texas Board of Professional Engineers and Land Surveyors Reg. No. F-23290
6330 West Loop South, Suite 150 • Bellaire, TX 77401 • 713.777.5337

JOB NO: 00050–0099–01 DATE: 1/19/2026

APPROVED BY:

DATE: MAY 2026

DESIGNED BY: MBMITCHELL

DRAWN BY: JMMUSSO

SURVEYED BY:

FB NO. XXXXXX

INTERIM REVIEW
Not intended for construction, bidding or permit purposes.
Engineer: WILLIAM R. SAGASTIZADO, P.E.
P.E. Serial No.: 125999
Date: MAY 2026

CITY OF HOUSTON
HOUSTON PUBLIC WORKS

SCOTT STREET NO. 1
LIFT STATION REHABILITATION
MECHANICAL
WET WEATHER LIFT STATION
GROUND LEVEL
INTERIOR–DEMOLITION

WBS NUMBER	FOR CITY OF HOUSTON USE ONLY
R–000267–127A–4	
DRAWING SCALE	
AS NOTED	
CITY OF HOUSTON PM	
TAHA LOTIA	
DWG NO. 2–M–8	
SHEET NO. 69 OF 220	

K:\00050\00050-0099-01 Scott St. No. 1 Lift Station Rehabilitation - Phase II Design\2 Design Phase\CAD\MECH-4.dwg

ORIGINAL SCALE IN INCHES FOR REDUCED PLANS

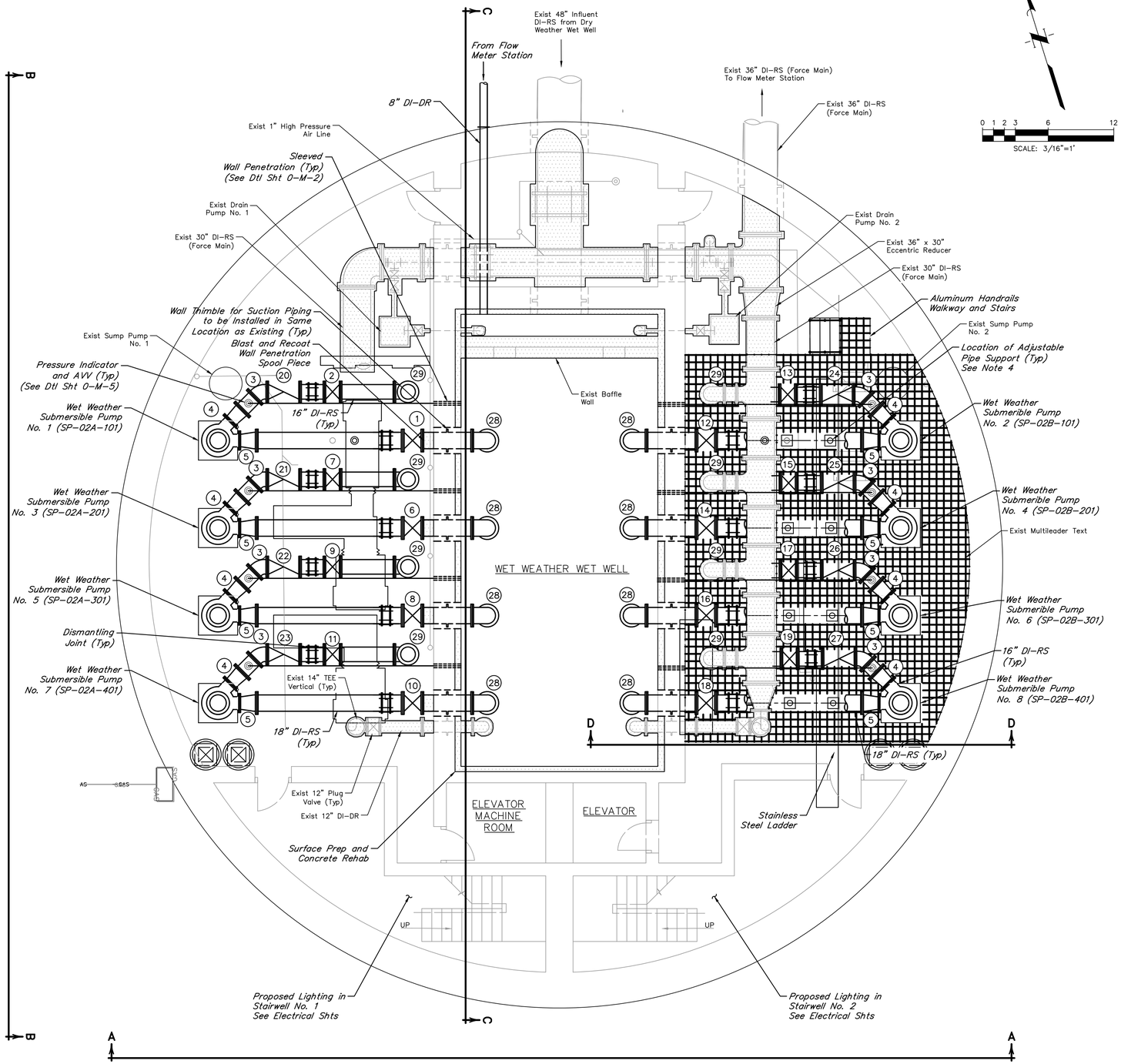

NO.	DATE	REVISIONS	APP.

LEGEND:

RECOAT

VALVE AND ACCESSORIES SCHEDULES

No.	DESCRIPTION
1	18" Actuated Plug Valve, FJ (PV-02A-101)
2	16" Actuated Plug Valve, FJ (PV-02A-102)
3	16" 45° Bend, FJ
4	14"x16" Reducer, FJ
5	14"x18" Reducer, FJ
6	18" Actuated Plug Valve, FJ (PV-02A-201)
7	16" Actuated Plug Valve, FJ (PV-02A-202)
8	18" Actuated Plug Valve, FJ (PV-02A-301)
9	16" Actuated Plug Valve, FJ (PV-02A-302)
10	18" Actuated Plug Valve, FJ (PV-02A-401)
11	16" Actuated Plug Valve, FJ (PV-02A-402)
12	18" Actuated Plug Valve, FJ (PV-02B-101)
13	16" Actuated Plug Valve, FJ (PV-02B-102)
14	18" Actuated Plug Valve, FJ (PV-02B-201)
15	16" Actuated Plug Valve, FJ (PV-02B-202)
16	18"Actuated Plug Valve, FJ (PV-02B-301)
17	16"Actuated Plug Valve, FJ (PV-02B-302)
18	18" Actuated Plug Valve, FJ (PV-02B-401)
19	16" Actuated Plug Valve. FJ (PV-02B-402)
20	16" Swing Check Valve, FJ (SCV-02A-101)
21	16" Swing Check Valve, FJ (SCV-02A-201)
22	16" Swing Check Valve, FJ (SCV-02A-301)
23	16" Swing Check Valve, FJ (SCV-02A-401)
24	16" Swing Check Valve, FJ (SCV-02B-101)
25	16" Swing Check Valve, FJ (SCV-02B-201)
26	16" Swing Check Valve, FJ (SCV-02B-301)
27	16" Swing Check Valve, FJ (SCV-02B-401)
28	18" Straight Flared End, FJ
29	16" 90° Bend, FJ

NOTES:

1. All aluminum grating, handrails, and access hatches shall receive shop applied powder coating. Access hatches shall be COH forest green. Rigid safety grating shall be color COH safety yellow. All other grating shall be color COH safety yellow. Handrails shall be color COH safety yellow.
2. Stairways shall have non-slip steps.
3. Contractor shall apply protective coating to all proposed above ground piping. Riser and hatches shall be labeled to correspond to the respective pump number.
4. Contractor to create hole in proposed grating at the location of adjustable pipe supports.
5. Grating not shown on West Pump Room only for clarification. West Room Grating is a Mirrored Set-up from East Pump room.
6. Additional reducers may be required based on final pump selection, contractor to adapt discharge and suction piping at no additional cost.
7. All pressure gauges and air release valves shall be stainless steel.
8. Pump motor casing shall be epoxy coated at pump manufacturer.
9. Contractor shall stencil directional arrows and process line identification on all pipes at no greater than 10-foot interval.
10. Pipes with diameter less than 3" do not have all valves & fittings shown.
11. Air release valve drain piping setup in West Pump room shall be mirrored in East Pump room.
12. Contractor shall paint air release valve piping with visual yellow marker.

QUIDDITY

Texas Board of Professional Engineers and Land Surveyors Reg. No. F-23290
6330 West Loop South, Suite 150 • Bellaire, TX 77401 • 713.777.5337

JOB NO: 00050-0099-01 DATE: 1/19/2026

APPROVED BY:

DATE: MAY 2026

DESIGNED BY: MBMITCHELL

DRAWN BY: JMMUSSO

SURVEYED BY:

FB NO. XXXXXX

INTERIM REVIEW
Not intended for construction, bidding or permit purposes.
Engineer: WILLIAM R. SAGASTIZADO, P.E
P.E. Serial No.: 125999
Date: MAY 2026

CITY OF HOUSTON
HOUSTON PUBLIC WORKS

SCOTT STREET NO. 1 LIFT STATION REHABILITATION
MECHANICAL

WET WEATHER LIFT STATION LOWER LEVEL-PROPOSED

WBS NUMBER	FOR CITY OF HOUSTON USE ONLY
R-000267-127A-4	
DRAWING SCALE	
AS NOTED	
CITY OF HOUSTON PM	
TAHA LOTIA	
DWG NO. 2-M-9	
SHEET NO. 70 OF 220	

K:\00050\00050-0099-01 Scott St. No. 1 Lift Station Rehabilitation - Phase II Design\2 Design Phase\CAD\MECH-1.dwg

ORIGINAL SCALE IN INCHES FOR REDUCED PLANS

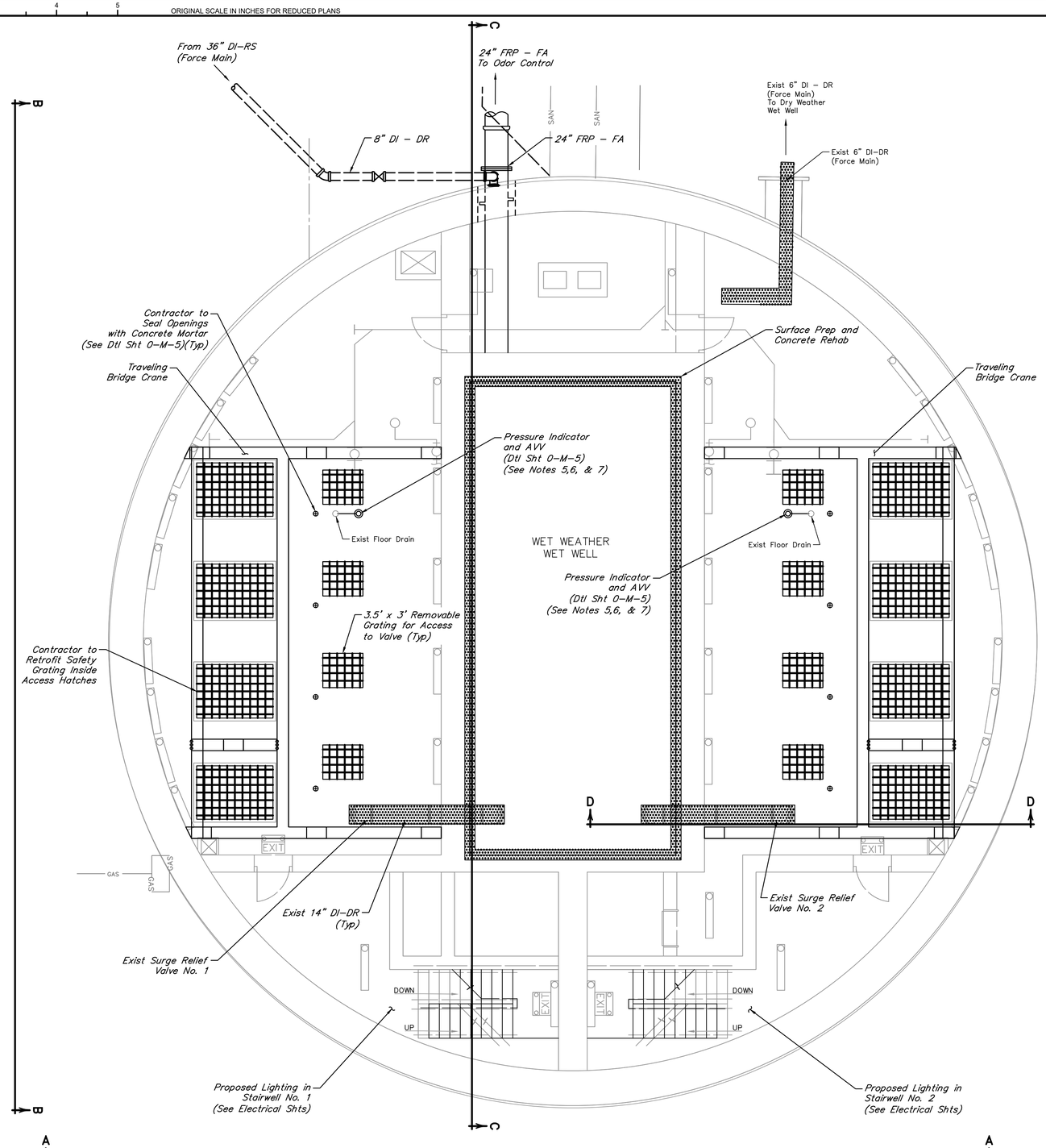

LEGEND:

RECOAT

NO.	DATE	REVISIONS	APP.

0 1 2 3 6 12

SCALE: 3/16"=1'

NOTES:

1. All aluminum grating, handrails, and access hatches shall receive shop applied powder coating. Access hatches shall be COH color forest green. Rigid safety grating shall be color COH safety yellow. All other grating shall be color COH safety yellow. Handrails shall be color COH safety yellow.
2. All hatch covers shall be powder–coated dark green and labeled. Access hatches shall be aluminum per Specification 11311. See Dtl Sht 0–M–6.
3. Contractor shall apply protective coating to all proposed above ground piping. Riser and hatches shall be labeled to correspond to the respective pump number.
4. Stairways shall have non–slip steps.
5. Contractor to paint protruding air release valve piping in mezzanine level with yellow visual marker.
6. Pressure indicator and AVV shall be placed directly above centerline of 30" header piping.
7. Drainline from pressure indicator and AVV to be routed to adjacent existing floor drain.
8. Contractor shall stencil directional arrows and process line identification on all pipes at no greater than 10–foot interval.

QUIDDITY
Texas Board of Professional Engineers and Land Surveyors Reg. No. F-23290
6330 West Loop South, Suite 150 • Bellaire, TX 77401 • 713.777.5337

JOB NO: 00050–0099–01 DATE: 1/19/2026

APPROVED BY:

DATE: MAY 2026

DESIGNED BY: MBMITCHELL

DRAWN BY: JMMUSSO

SURVEYED BY:

FB NO. XXXXXX

INTERIM REVIEW
Not intended for construction, bidding or permit purposes.
Engineer: WILLIAM R. SAGASTIZADO, P.E.
P.E. Serial No.: 125999
Date: MAY 2026

CITY OF HOUSTON
HOUSTON PUBLIC WORKS

SCOTT STREET NO. 1 LIFT STATION REHABILITATION
MECHANICAL

WET WEATHER LIFT STATION MEZZANINE LEVEL–PROPOSED

WBS NUMBER
R–000267–127A–4
DRAWING SCALE
AS NOTED
CITY OF HOUSTON PM
TAHA LOTIA
DWG NO. 2–M–10
SHEET NO. 71 OF 220

FOR CITY OF HOUSTON USE ONLY

0 1 2 3 4 5

ORIGINAL SCALE IN INCHES FOR REDUCED PLANS

NO.	DATE	REVISIONS	APP.

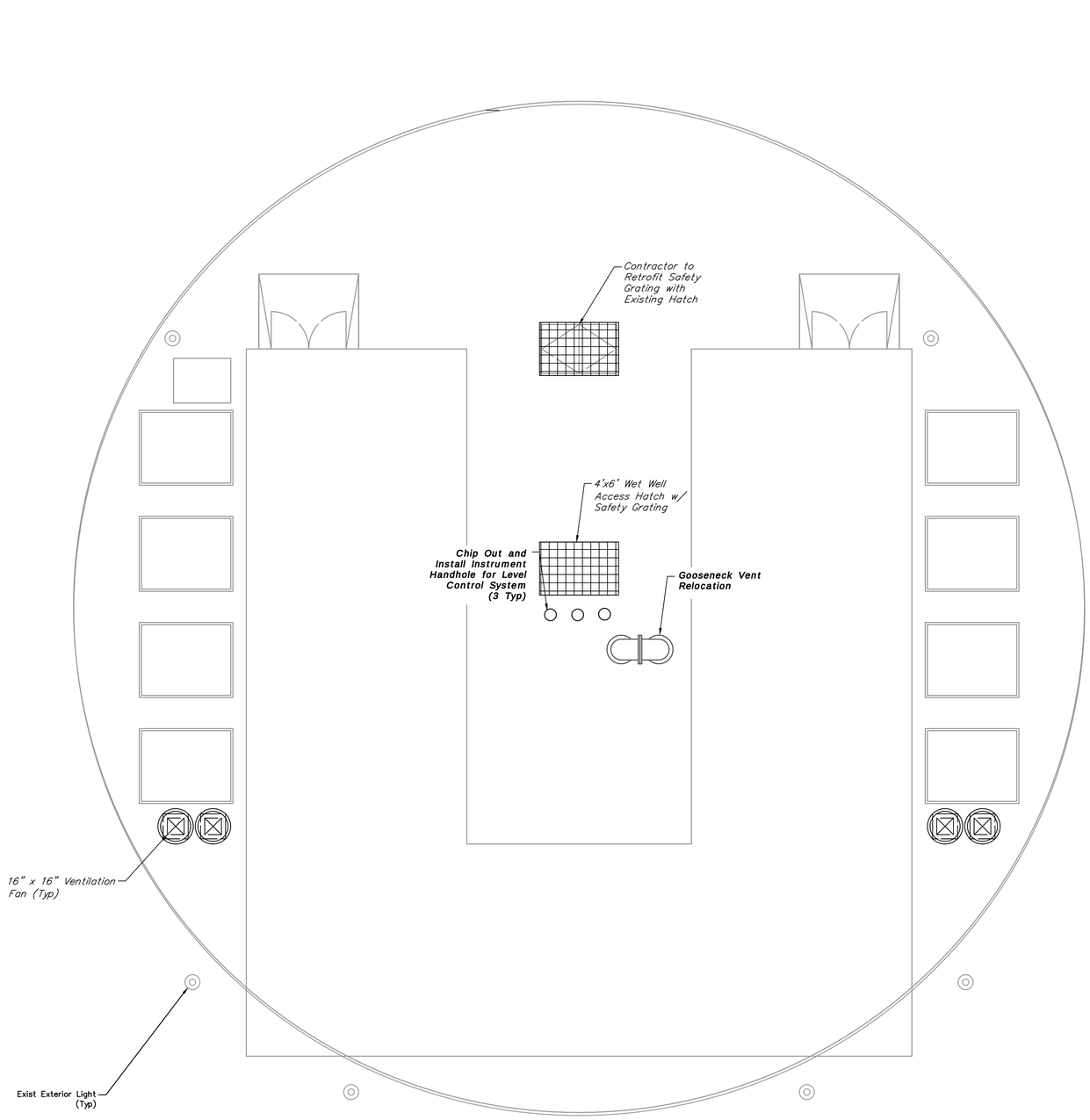

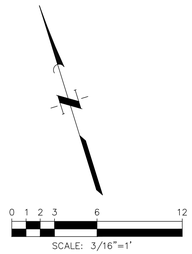

NOTES:

1. Interior Excluded for Clarity.
2. All proposed hatch covers shall be coated in forest green and labeled. Access hatches shall be aluminum per Specification 11311. See Dtl Sht O–M–6.
3. Contractor shall apply protective coating to all proposed above ground piping. Riser and hatches shall be labeled to correspond to the respective pump number.
4. All aluminum grating, handrails, and access hatches shall receive shop applied powder coating. Access hatches shall be COH color forest green. Rigid safety grating shall be color COH safety yellow. All other grating shall be color COH safety yellow. Handrails shall be color COH safety yellow.
5. Contractor shall stencil directional arrows and process line identification on all pipes at no greater than 10–foot interval.

QUIDDITY
Texas Board of Professional Engineers and Land Surveyors Reg. No. F-23290
6330 West Loop South, Suite 150 • Bellaire, TX 77401 • 713.777.5337

JOB NO: 00050–0099–01 DATE: 1/19/2026

APPROVED BY:

DATE: MAY 2026

DESIGNED BY: MBMITCHELL

DRAWN BY: JMMUSSO

SURVEYED BY:

FB NO. XXXXXX

INTERIM REVIEW
Not intended for construction, bidding or permit purposes.
Engineer: WILLIAM R. SAGASTIZADO, P.E
P.E. Serial No.: 125999
Date: MAY 2026

CITY OF HOUSTON
HOUSTON PUBLIC WORKS

SCOTT STREET NO. 1 LIFT STATION REHABILITATION

MECHANICAL

WET WEATHER LIFT STATION GROUND LEVEL EXTERIOR–PROPOSED

WBS NUMBER	FOR CITY OF HOUSTON USE ONLY
R–000267–127A–4	
DRAWING SCALE	
AS NOTED	
CITY OF HOUSTON PM	
TAHA LOTIA	
DWG NO. 2–M–11	
SHEET NO. 72 OF 220	

K:\00050\00050-0099-01 Scott St. No. 1 Lift Station Rehabilitation - Phase II Design\2 Design Phase\CAD\MECH-4.dwg

0 1 2 3 4 5

ORIGINAL SCALE IN INCHES FOR REDUCED PLANS

NO.	DATE	REVISIONS	APP.

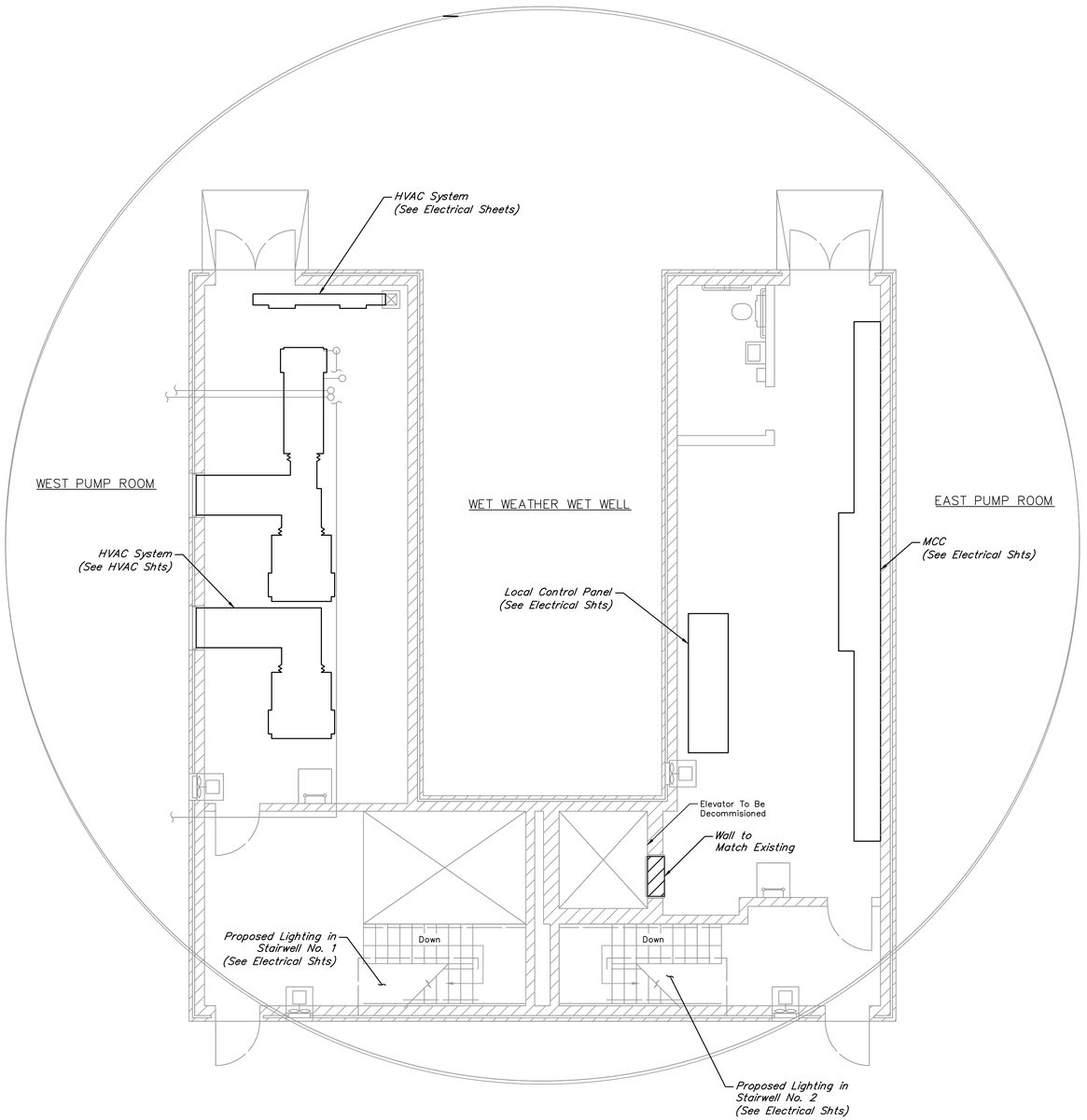

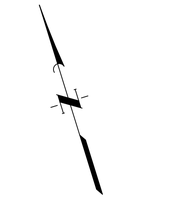

SCALE: 3/16"=1'

NOTES:

1. Exterior Excluded for Clarity.
2. Stairways shall have non-slip steps.
3. See HVAC and Electrical sheets for proposed work in Wet Weather Lift Station Ground-Level Interior.

QUIDDITY

Texas Board of Professional Engineers and Land Surveyors Reg. No. F-23290
6330 West Loop South, Suite 150 • Bellaire, TX 77401 • 713.777.5337

JOB NO: 00050-0099-01 DATE: 1/19/2026

APPROVED BY:

DATE: MAY 2026

DESIGNED BY: MBMITCHELL

DRAWN BY: JMMUSSO

SURVEYED BY:

FB NO. XXXXXX

INTERIM REVIEW

Not intended for construction, bidding or permit purposes.

Engineer: WILLIAM R. SAGASTIZADO, P.E.

P.E. Serial No.: 125999

Date: MAY 2026

CITY OF HOUSTON

HOUSTON PUBLIC WORKS

SCOTT STREET NO. 1 LIFT STATION REHABILITATION

MECHANICAL

WET WEATHER LIFT STATION GROUND LEVEL INTERIOR-PROPOSED

WBS NUMBER
R-000267-127A-4
DRAWING SCALE
AS NOTED
CITY OF HOUSTON PM
TAHA LOTIA
DWG NO. 2-M-12
SHEET NO. 73 OF 220

FOR CITY OF HOUSTON USE ONLY

K:\00050\00050-0099-01 Scott St. No. 1 Lift Station Rehabilitation - Phase II Design\2 Design Phase\CAD\MECH-4.dwg

0 1 2 3 4 5 ORIGINAL SCALE IN INCHES FOR REDUCED PLANS

NO.	DATE	REVISIONS	APP.

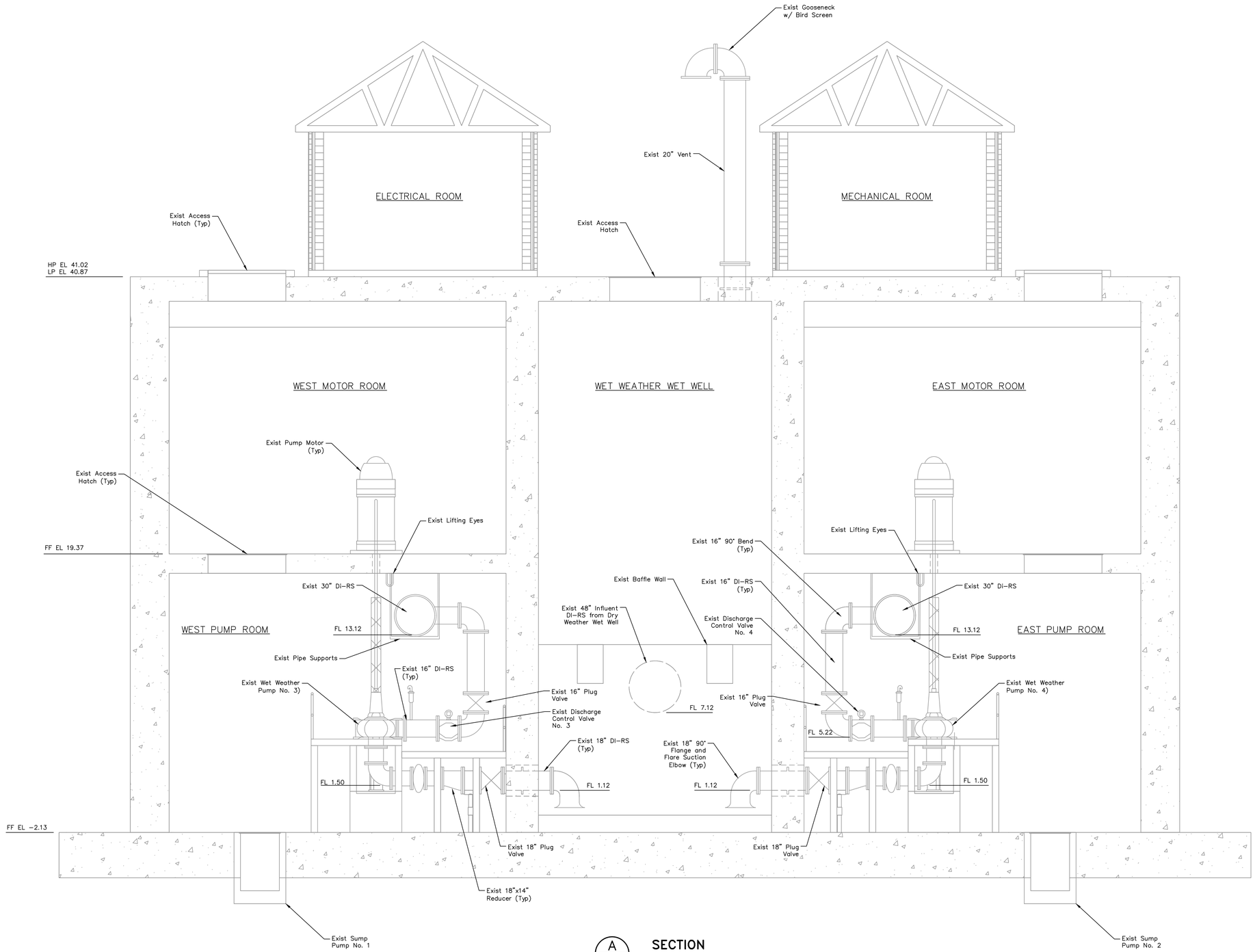

A **SECTION**
SCALE: 1/4"=1'-0"

0 1 2 4 8 12
SCALE: 1/4" = 1'

NOTES:

1. West Pump Room is a Mirrored Set-Up from East Pump Room.

QUIDDITY
Texas Board of Professional Engineers and Land Surveyors Reg. No. F-23290
6330 West Loop South, Suite 150 • Bellaire, TX 77401 • 713.777.5337

JOB NO: 00050-0099-01 DATE: 1/19/2026

APPROVED BY:

DATE: MAY 2026

DESIGNED BY: MBMITCHELL

DRAWN BY: JMMUSSO

SURVEYED BY:

FB NO. XXXXXX

INTERIM REVIEW
Not intended for construction, bidding or permit purposes.
Engineer: WILLIAM R. SAGASTIZADO, P.E.
P.E. Serial No.: 125999
Date: MAY 2026

CITY OF HOUSTON
HOUSTON PUBLIC WORKS

SCOTT STREET NO. 1 LIFT STATION REHABILITATION
MECHANICAL

WET WEATHER LIFT STATION LOWER LEVEL-EXISTING

WBS NUMBER	FOR CITY OF HOUSTON USE ONLY
R-000267-127A-4	
DRAWING SCALE	
AS NOTED	
CITY OF HOUSTON PM	
TAHA LOTIA	
DWG NO. 2-M-13	
SHEET NO. 74 OF 220	

K:\00050\00050-0099-01 Scott St. No. 1 Lift Station Rehabilitation - Phase II Design\2 Design Phase\CAD\MECH-1.dwg

0 1 2 3 4 5

ORIGINAL SCALE IN INCHES FOR REDUCED PLANS

NO.	DATE	REVISIONS	APP.

0 1 2 4 8 12

SCALE: 1/4" = 1'

NOTES:

1. West Pump Room is a Mirrored Set-Up from East Pump Room.

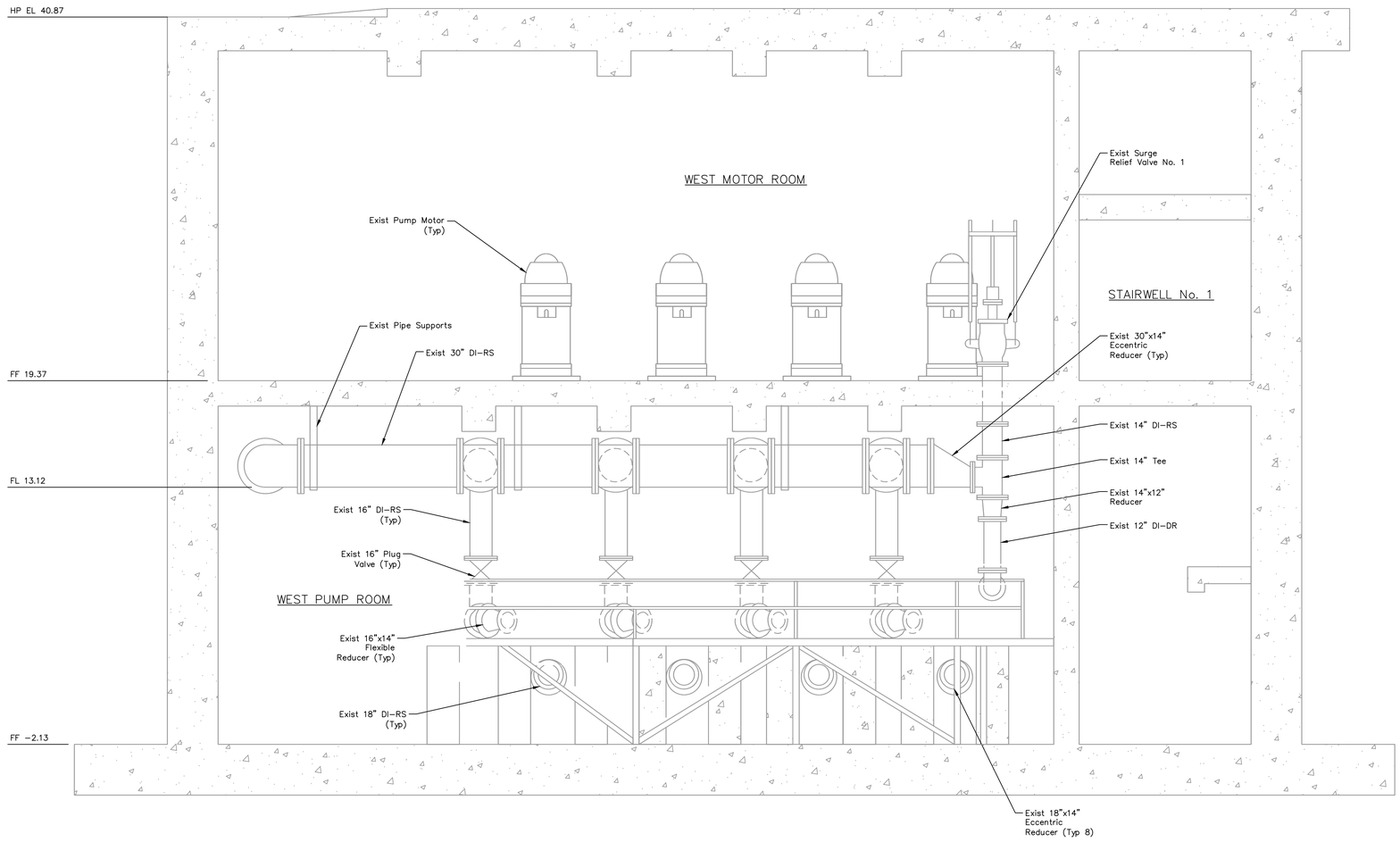

B **SECTION**

SCALE: 1/4"=1'-0"

QUIDDITY

Texas Board of Professional Engineers and Land Surveyors Reg. No. F-23290
6330 West Loop South, Suite 150 • Bellaire, TX 77401 • 713.777.5337

JOB NO: 00050-0099-01 DATE: 1/19/2026

APPROVED BY:

DATE: MAY 2026

DESIGNED BY: MBMITCHELL

DRAWN BY: JMMUSSO

SURVEYED BY:

FB NO. XXXXXX

INTERIM REVIEW

Not intended for construction, bidding or permit purposes.

Engineer: WILLIAM R. SAGASTIZADO, P.E

P.E. Serial No.: 125999

Date: MAY 2026

CITY OF HOUSTON

HOUSTON PUBLIC WORKS

SCOTT STREET NO. 1 LIFT STATION REHABILITATION

MECHANICAL

WET WEATHER LIFT STATION MEZZANINE LEVEL-EXISTING

WBS NUMBER	FOR CITY OF HOUSTON USE ONLY
R-000267-127A-4	
DRAWING SCALE	
AS NOTED	
CITY OF HOUSTON PM	
TAHA LOTIA	
DWG NO. 2-M-14	
SHEET NO. 75 OF 220	

K:\00050\00050-0099-01 Scott St. No. 1 Lift Station Rehabilitation - Phase II Design\2 Design Phase\CAD\MECH-3.dwg

0 1 2 3 4 5 ORIGINAL SCALE IN INCHES FOR REDUCED PLANS

NO.	DATE	REVISIONS	APP.

0 1 2 4 8 12
SCALE: 1/4" = 1'

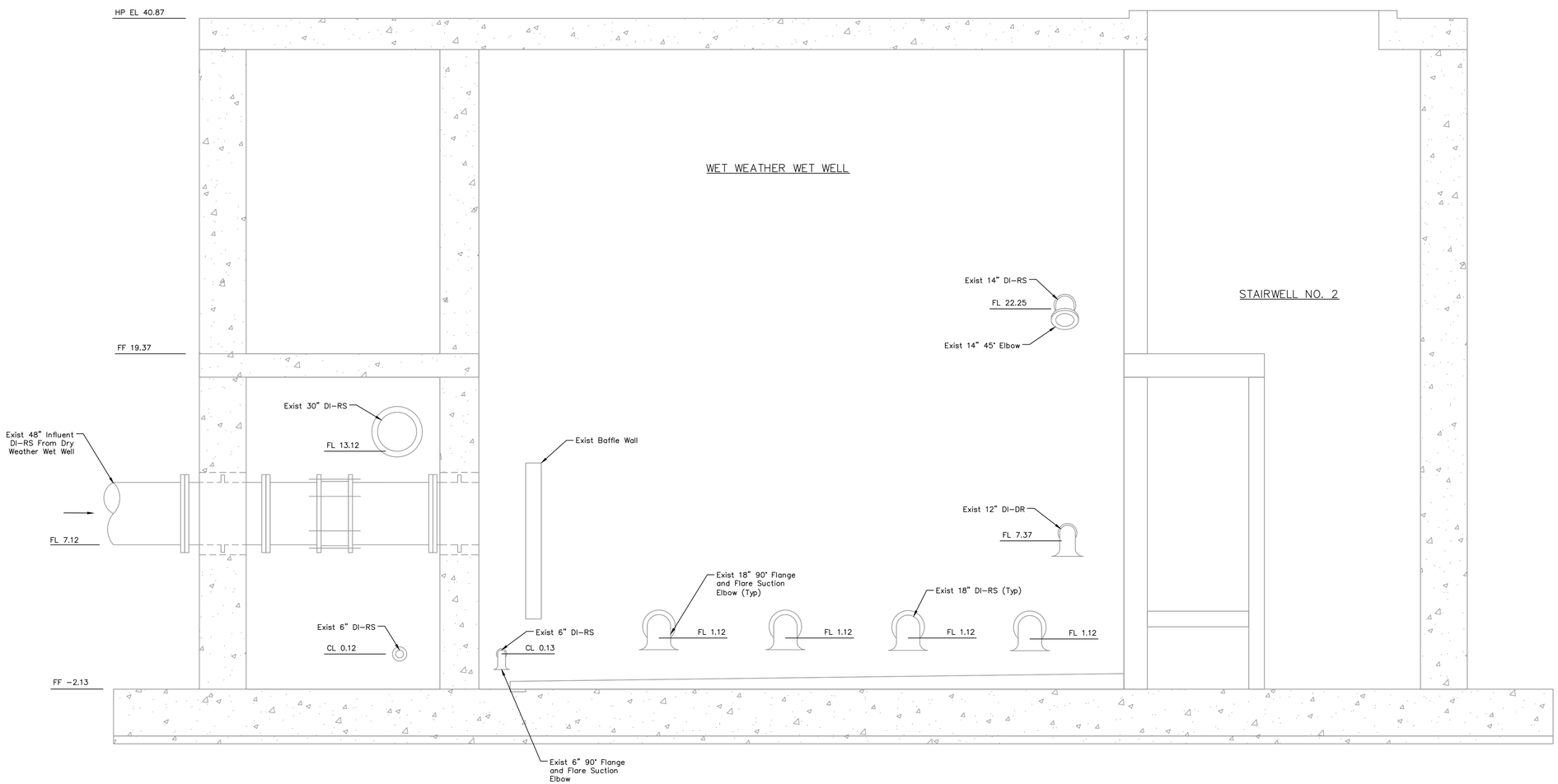

C **SECTION**
SCALE: 1/4"=1'−0"

NOTES:

1. Interior Excluded for Clarity.

QUIDDITY
Texas Board of Professional Engineers and Land Surveyors Reg. No. F-23290
6330 West Loop South, Suite 150 • Bellaire, TX 77401 • 713.777.5337

JOB NO: 00050−0099−01 DATE: 1/19/2026

APPROVED BY:	
DATE: MAY 2026	
DESIGNED BY: MBMITCHELL	
DRAWN BY: JMMUSSO	
SURVEYED BY:	
FB NO. XXXXXX	

INTERIM REVIEW
Not intended for construction, bidding or permit purposes.
Engineer: WILLIAM R. SAGASTIZADO, P.E.
P.E. Serial No.: 125999
Date: MAY 2026

CITY OF HOUSTON
HOUSTON PUBLIC WORKS

SCOTT STREET NO. 1 LIFT STATION REHABILITATION
MECHANICAL

WET WEATHER LIFT STATION EXISTING

WBS NUMBER	FOR CITY OF HOUSTON USE ONLY
R−000267−127A−4	
DRAWING SCALE	
AS NOTED	
CITY OF HOUSTON PM	
TAHA LOTIA	
DWG NO. 2−M−15	
SHEET NO. 76 OF 220	

K:\00050\00050-0099-01 Scott St. No. 1 Lift Station Rehabilitation - Phase II Design\2 Design Phase\CAD\MECH-4.dwg

0 1 2 3 4 5

ORIGINAL SCALE IN INCHES FOR REDUCED PLANS

NO.	DATE	REVISIONS	APP.

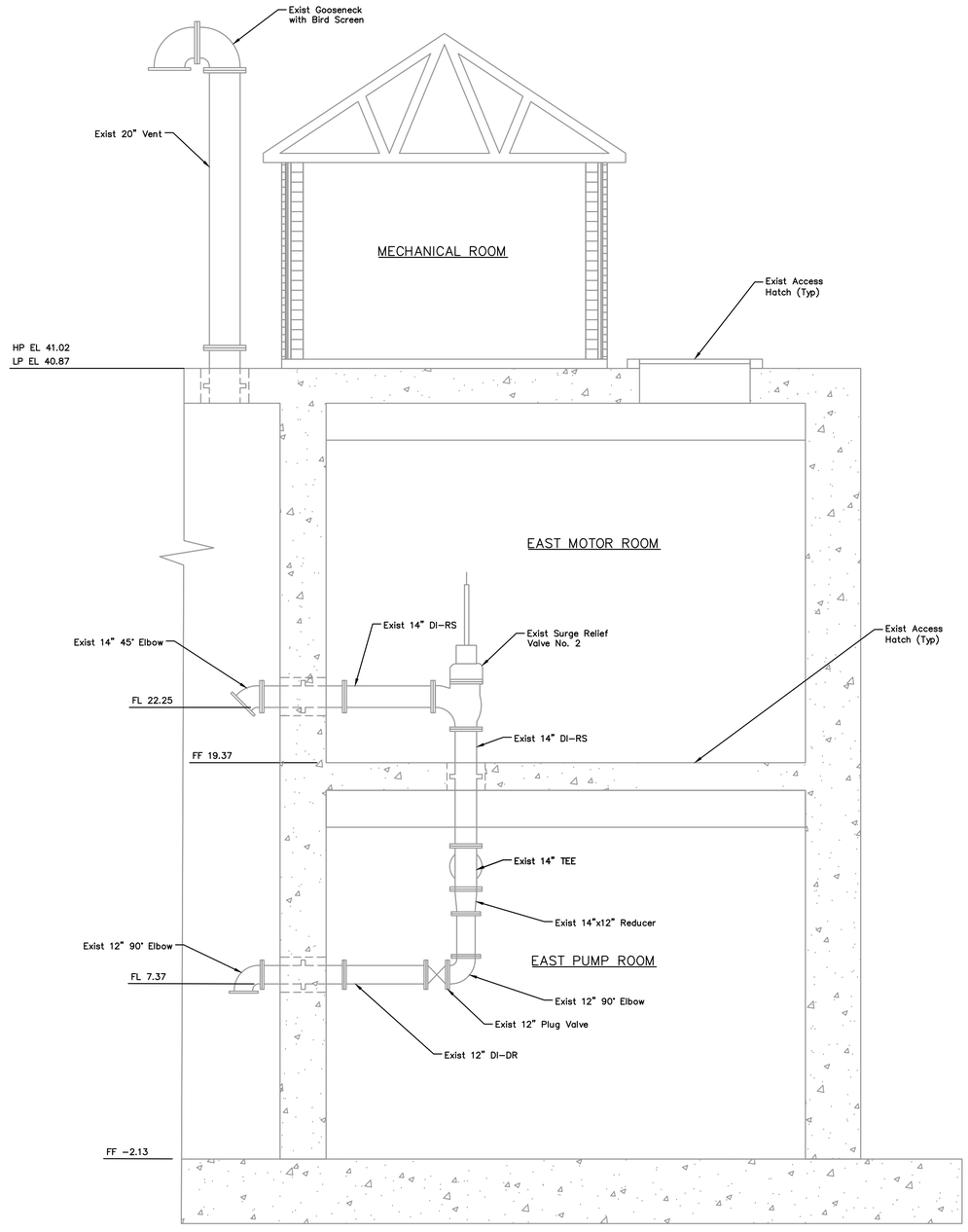

D SECTION

SCALE: 1/4"=1'-0"

0 1 2 4 8 12

SCALE: 1/4" = 1'

NOTES:

1. Exterior Excluded for Clarity.
2. West Pump Room is a Mirrored Set-Up from East Pump Room.

QUIDDITY

Texas Board of Professional Engineers and Land Surveyors Reg. No. F-23290
6330 West Loop South, Suite 150 • Bellaire, TX 77401 • 713.777.5337

JOB NO: 00050-0099-01 DATE: 1/19/2026

APPROVED BY:

DATE: MAY 2026

DESIGNED BY: MBMITCHELL

DRAWN BY: JMMUSSO

SURVEYED BY:

FB NO. XXXXXX

INTERIM REVIEW

Not intended for construction, bidding or permit purposes.

Engineer: WILLIAM R. SAGASTIZADO, P.E

P.E. Serial No.: 125999

Date: MAY 2026

CITY OF HOUSTON

HOUSTON PUBLIC WORKS

SCOTT STREET NO. 1 LIFT STATION REHABILITATION

MECHANICAL

WET WEATHER LIFT STATION EAST SECTION EXISTING

WBS NUMBER	FOR CITY OF HOUSTON USE ONLY
R-000267-127A-4	
DRAWING SCALE	
AS NOTED	
CITY OF HOUSTON PM	
TAHA LOTIA	
DWG NO. 2-M-16	
SHEET NO. 77 OF 220	

K:\00050\00050-0099-01 Scott St. No. 1 Lift Station Rehabilitation - Phase II Design\2 Design Phase\CAD\MECH-4.dwg

0 1 2 3 4 5 ORIGINAL SCALE IN INCHES FOR REDUCED PLANS

NO.	DATE	REVISIONS	APP.

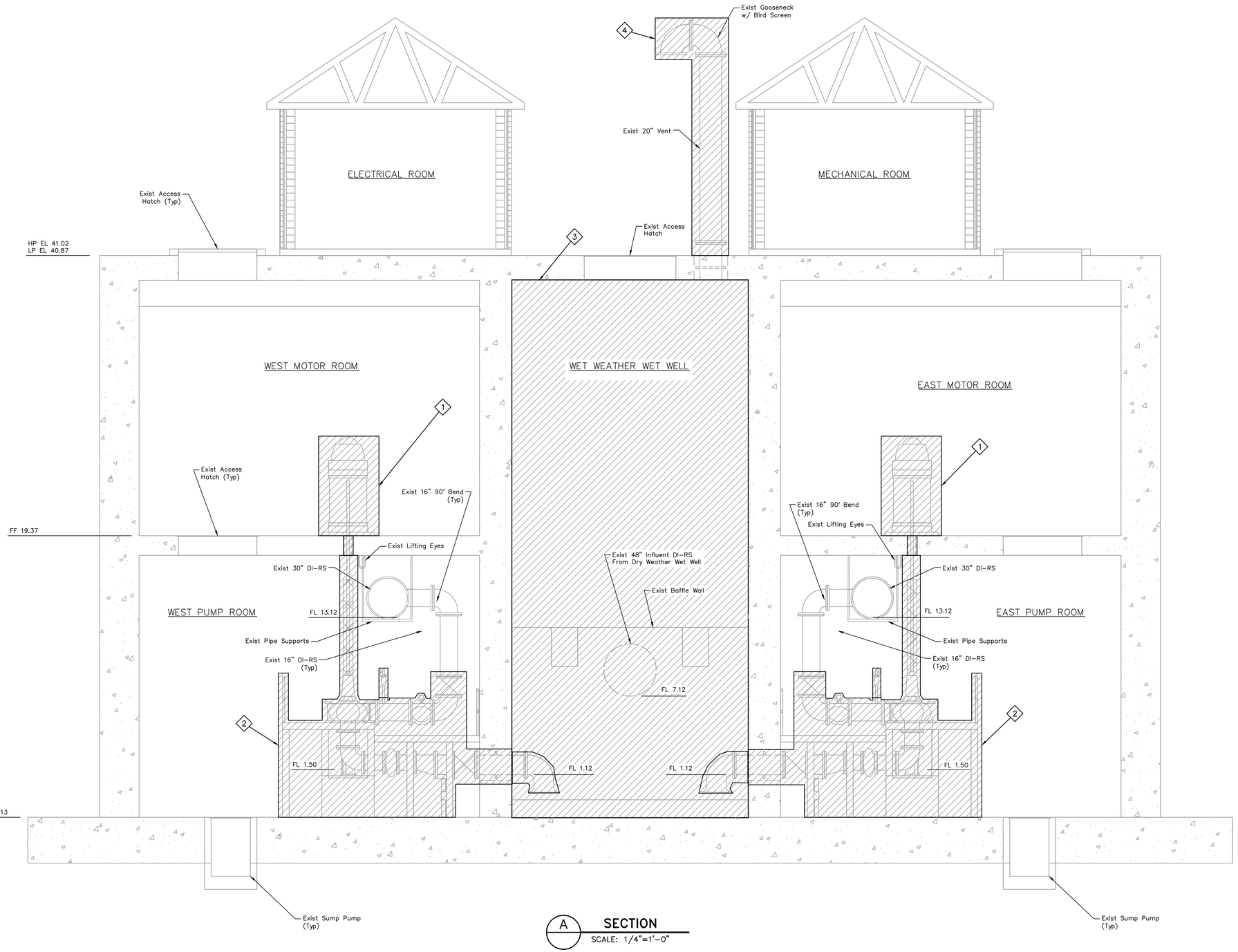

A SECTION
SCALE: 1/4"=1'-0"

ITEMS OF WORK

No.	DESCRIPTION
1	Demolish the Existing Motors from the Wet Weather Pumps, Conduit, Wire Associated with Motor.
2	Demolish Existing Wet Weather Pumps Associated Concrete Supports, Small Diameter Piping, Shaft, Controls, Conduit, Wire and Related Accessories.
3	Demolish T-LOK Liner Inside Wet Well including bottom face of top slab.
4	Demolish 20" vent and goose-neck with bird screen.

0 1 2 4 8 12
SCALE: 1/4" = 1'

LEGEND:

DEMOLISH

NOTES:

1. City of Houston retains first right of refusal on all demolition items. Contractor shall coordinate with City of Houston Wastewater OPS on all equipment to be salvaged. Contractor shall deliver salvaged items to a location as determined by City of Houston Wastewater OPS.
2. Refer to Sheets 2-M-5 through 2-M-8 for additional information on scope of demolition.

QUIDDITY
Texas Board of Professional Engineers and Land Surveyors Reg. No. F-23290
6330 West Loop South, Suite 150 • Bellaire, TX 77401 • 713.777.5337

JOB NO: 00050-0099-01 DATE: 1/19/2026

APPROVED BY:

DATE: MAY 2026

DESIGNED BY: MBMITCHELL

DRAWN BY: JMMUSSO

SURVEYED BY:

FB NO. XXXXXX

INTERIM REVIEW
Not intended for construction, bidding or permit purposes.
Engineer: WILLIAM R. SAGASTIZADO, P.E
P.E. Serial No.: 125999
Date: MAY 2026

CITY OF HOUSTON
HOUSTON PUBLIC WORKS

SCOTT STREET NO. 1 LIFT STATION REHABILITATION
MECHANICAL

WET WEATHER LIFT STATION LOWER LEVEL-DEMOLITION

WBS NUMBER
R-000267-127A-4
DRAWING SCALE
AS NOTED
CITY OF HOUSTON PM
TAHA LOTIA
DWG NO. 2-M-17
SHEET NO. 78 OF 220

FOR CITY OF HOUSTON USE ONLY

K:\00050\00050-0099-01 Scott St. No. 1 Lift Station Rehabilitation - Phase II Design\2 Design Phase\CAD\MECH-1.dwg

0 1 2 3 4 5 ORIGINAL SCALE IN INCHES FOR REDUCED PLANS

NO.	DATE	REVISIONS	APP.

0 1 2 4 8 12
SCALE: 1/4" = 1'

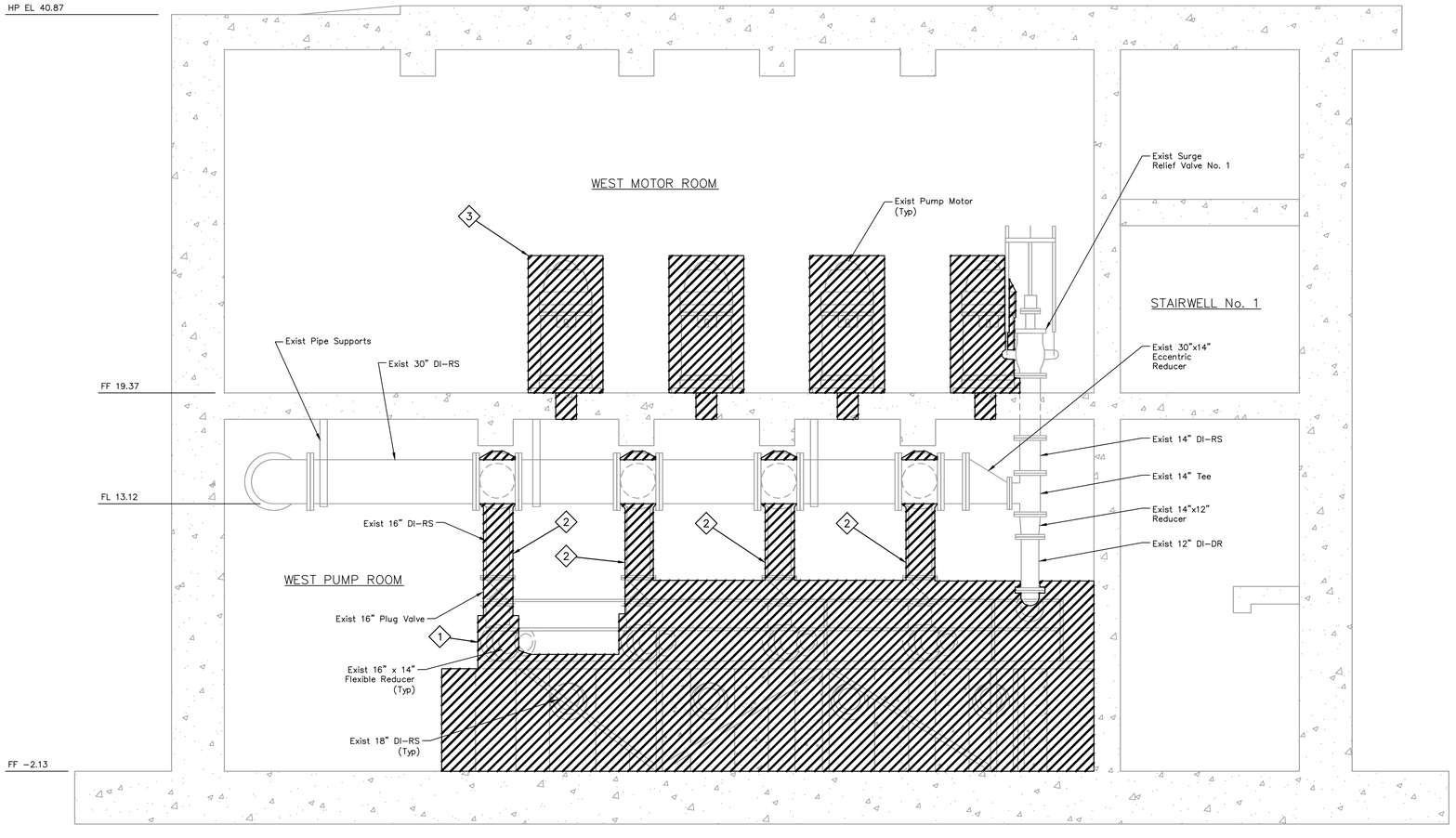

B **SECTION**
SCALE: 1/4"=1'-0"

NOTES:

1. City of Houston retains first right of refusal on all demolition items. Contractor shall coordinate with City of Houston Wastewater OPS on all equipment to be salvaged. Contractor shall deliver salvaged items to a location as determined by City of Houston Wastewater OPS.

ITEMS OF WORK

No.	DESCRIPTION
1	Demolish all Grating, Supports, Handrails and Miscellaneous Metals Related to the elevated Platform. Contractor Shall Grind down Anchors and Cover with Grout.
2	Demolish Existing Discharge Piping to the Vertical Portion of the Pipe, Valves, Supports and Miscellaneous Metals.
3	Demolish the Existing Motors from the Wet Weather Pumps, Conduit, Wire Associated with Motor.

LEGEND:

DEMOLISH

QUIDDITY
Texas Board of Professional Engineers and Land Surveyors Reg. No. F-23290
6330 West Loop South, Suite 150 • Bellaire, TX 77401 • 713.777.5337

JOB NO: 00050-0099-01 DATE: 1/19/2026

APPROVED BY:

DATE: MAY 2026

DESIGNED BY: MBMITCHELL

DRAWN BY: JMMUSSO

SURVEYED BY:

FB NO. XXXXXX

INTERIM REVIEW
Not intended for construction, bidding or permit purposes.
Engineer: WILLIAM R. SAGASTIZADO, P.E
P.E. Serial No.: 125999
Date: MAY 2026

CITY OF HOUSTON
HOUSTON PUBLIC WORKS

SCOTT STREET NO. 1 LIFT STATION REHABILITATION

MECHANICAL

WET WEATHER LIFT STATION MEZZANINE LEVEL-DEMOLITION

WBS NUMBER
R-000267-127A-4

DRAWING SCALE
AS NOTED

CITY OF HOUSTON PM
TAHA LOTIA

DWG NO. 2-M-18

SHEET NO. 79 OF 220

FOR CITY OF HOUSTON USE ONLY

K:\00050\00050-0099-01 Scott St. No. 1 Lift Station Rehabilitation - Phase II Design\2 Design Phase\CAD\MECH-3.dwg

0 1 2 3 4 5

ORIGINAL SCALE IN INCHES FOR REDUCED PLANS

NO.	DATE	REVISIONS	APP.

0 1 2 4 8 12

SCALE: 1/4" = 1'

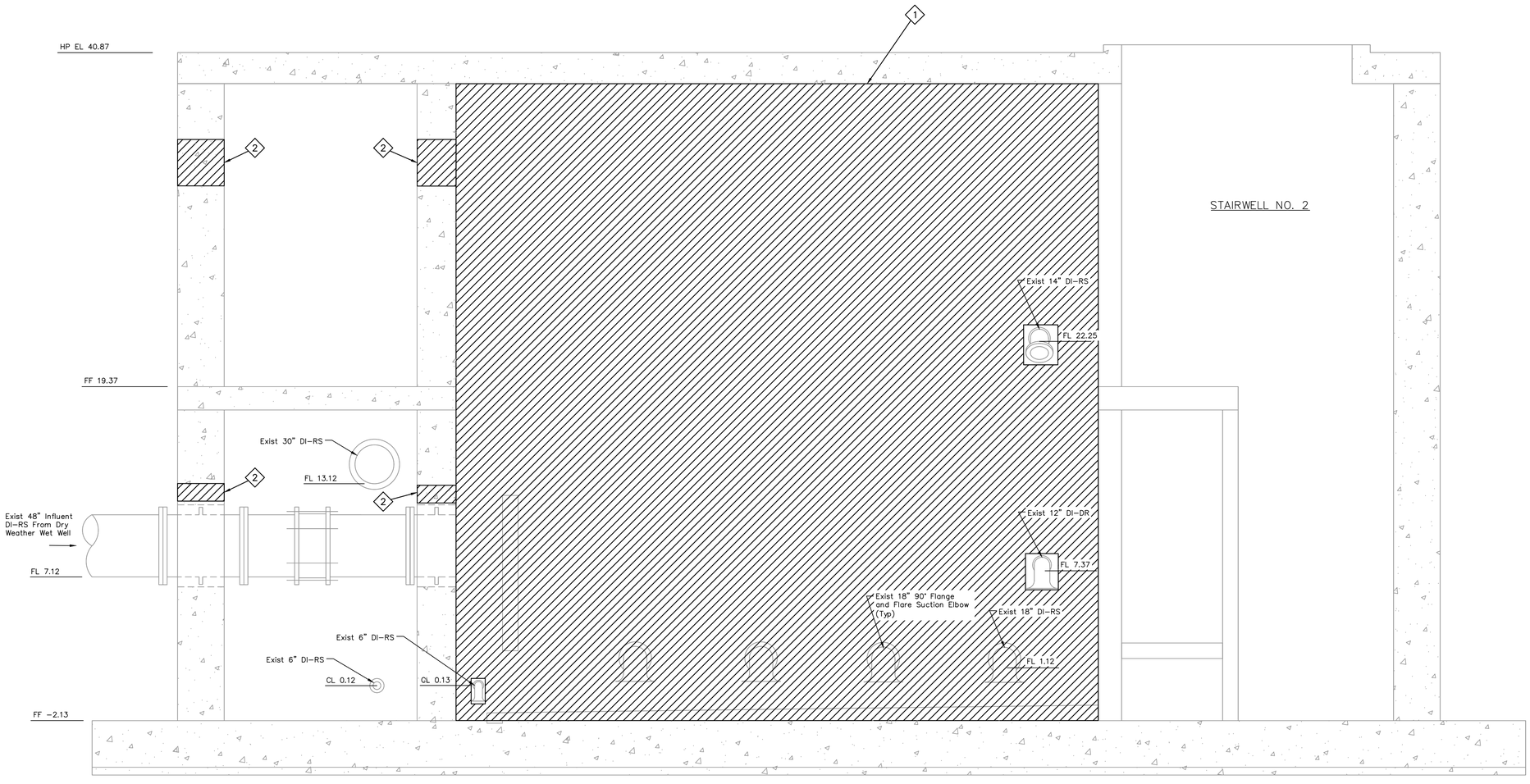

C SECTION

SCALE: 1/4"=1'-0"

ITEMS OF WORK

No.	DESCRIPTION
1	Demolish T-LOK Liner Inside Wet Well including bottom face of top slab.
2	Contractor to Core Through the Existing Walls to Allow for Construction of the FRP Duct Works and 8-inch Force Main Drain Line.

LEGEND:

DEMOLISH

NOTES:

1. Interior Excluded for Clarity.
2. City of Houston retains first right of refusal on all demolition items. Contractor shall coordinate with City of Houston Wastewater OPS on all equipment to be salvaged. Contractor shall deliver salvaged items to a location as determined by City of Houston Wasterwater OPS.

QUIDDITY

Texas Board of Professional Engineers and Land Surveyors Reg. No. F-23290
6330 West Loop South, Suite 150 • Bellaire, TX 77401 • 713.777.5337

JOB NO: 00050-0099-01 DATE: 1/19/2026

APPROVED BY:

DATE: MAY 2026

DESIGNED BY: MBMITCHELL

DRAWN BY: JMMUSSO

SURVEYED BY:

FB NO. XXXXXX

INTERIM REVIEW

Not intended for construction, bidding or permit purposes.

Engineer: WILLIAM R. SAGASTIZADO, P.E

P.E. Serial No.: 125999

Date: MAY 2026

CITY OF HOUSTON

HOUSTON PUBLIC WORKS

SCOTT STREET NO. 1 LIFT STATION REHABILITATION

MECHANICAL

WET WEATHER LIFT STATION DEMOLITION

WBS NUMBER	FOR CITY OF HOUSTON USE ONLY
R-000267-127A-4	
DRAWING SCALE	
AS NOTED	
CITY OF HOUSTON PM	
TAHA LOTIA	
DWG NO. 2-M-19	
SHEET NO. 80 OF 220	

K:\00050\00050-0099-01 Scott St. No. 1 Lift Station Rehabilitation - Phase II Design\2 Design Phase\CAD\MECH-4.dwg

0 1 2 3 4 5

ORIGINAL SCALE IN INCHES FOR REDUCED PLANS

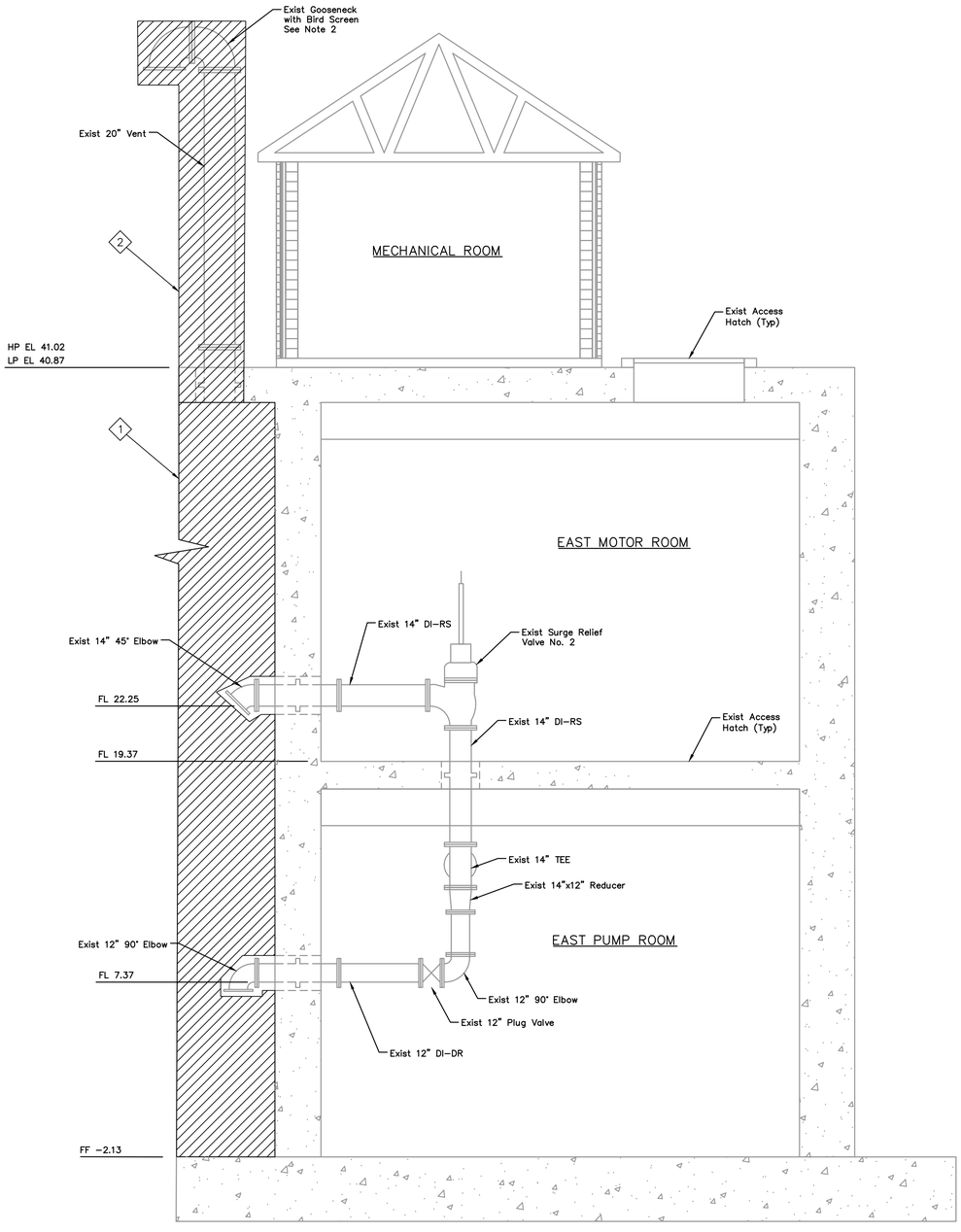

D SECTION

SCALE: 1/4"=1'-0"

NO.	DATE	REVISIONS	APP.

0 1 2 4 8 12

SCALE: 1/4" = 1'

ITEMS OF WORK

No.	DESCRIPTION
1	Demolish T-LOK Liner Inside Wet Well including bottom face of top slab.
2	Demolish 20" vent and goose-neck with bird screen.

NOTES:

1. Exterior Excluded for Clarity.
2. Contractor to field verify height of vent.
3. City of Houston retains first right of refusal on all demolition items. Contractor shall coordinate with City of Houston Wastewater OPS on all equipment to be salvaged. Contractor shall deliver salvaged items to a location as determined by City of Houston Wasterwater OPS.

LEGEND:

DEMOLISH

QUIDDITY

Texas Board of Professional Engineers and Land Surveyors Reg. No. F-23290
6330 West Loop South, Suite 150 • Bellaire, TX 77401 • 713.777.5337

JOB NO: 00050-0099-01 DATE: 1/19/2026

APPROVED BY:

DATE: MAY 2026

DESIGNED BY: MBMITCHELL

DRAWN BY: JMMUSSO

SURVEYED BY:

FB NO. XXXXXX

INTERIM REVIEW

Not intended for construction, bidding or permit purposes.

Engineer: WILLIAM R. SAGASTIZADO, P.E.

P.E. Serial No.: 125999

Date: MAY 2026

CITY OF HOUSTON

HOUSTON PUBLIC WORKS

SCOTT STREET NO. 1 LIFT STATION REHABILITATION

MECHANICAL

WET WEATHER LIFT STATION EAST SECTION-DEMOLITION

WBS NUMBER	FOR CITY OF HOUSTON USE ONLY
R-000267-127A-4	
DRAWING SCALE	
AS NOTED	
CITY OF HOUSTON PM	
TAHA LOTIA	
DWG NO. 2-M-20	
SHEET NO. 81 OF 220	

K:\00050\00050-0099-01 Scott St. No. 1 Lift Station Rehabilitation - Phase II Design\2 Design Phase\CAD\MECH-4.dwg

0 1 2 3 4 5 ORIGINAL SCALE IN INCHES FOR REDUCED PLANS

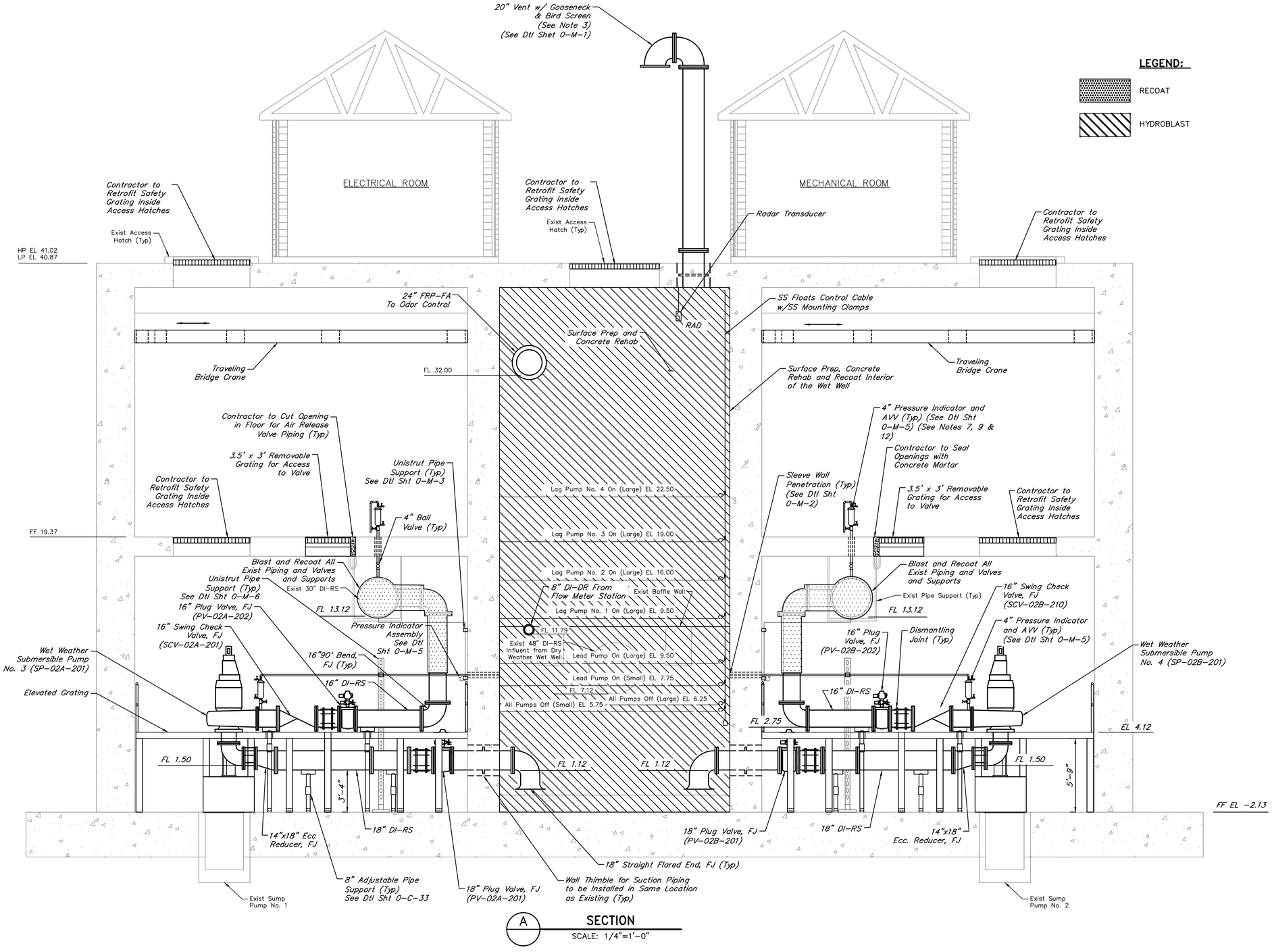

A **SECTION**
SCALE: 1/4"=1'-0"

LEGEND:

RECOAT

HYDROBLAST

NO.	DATE	REVISIONS	APP.

0 1 2 4 8 12
SCALE: 1/4" = 1'

NOTES:

1. All proposed valves shall be installed with position indicator.
2. Contractor shall apply protective coating to all proposed wet well piping.
3. All aluminum grating, handrails, access hatches shall receive shop applied powder coating. Access hatches shall be COH color forest green. Rigid safety grating shall be color COH safety yellow. All other grating shall be color COH safety yellow. Handrails shall be color COH safety yellow.
4. Contractor shall apply protective coating to all proposed above ground piping. Riser and hatches shall be labeled to correspond to the respective pump number.
5. All hatch covers shall be powder-coated forest green and labeled. Access hatches shall be aluminum per Specification 11311. See Dtl Sht 0-M-6.
6. Surface prep and concrete rehab to include underside of top slab.
7. All pressure gauges and air release valves are to be stainless steel.
8. Pump motor casing shall be epoxy coated at pump manufacturer.
9. Contractor to paint protruding air release valve piping in mezzanine level with yellow visual marker.
10. Pipes with diameter less than 3" do not have all valves & fittings shown and are not labeled with valve & accessories schedule.
11. Contractor shall stencil directional arrows and process line identification on all pipes at no greater than 10-foot interval.
12. Drainline from each Mezzanine Level Pressure Indicator and AVV shall be routed to adjacent existing mezzanine level floor drain. See Sht 2-M-10.
13. Contractor shall paint air release valve piping with visual yellow marker.

QUIDDITY
Texas Board of Professional Engineers and Land Surveyors Reg. No. F-23290
6330 West Loop South, Suite 150 • Bellaire, TX 77401 • 713.777.5337

JOB NO: 00050-0099-01 DATE: 1/19/2026

APPROVED BY:

DATE: MAY 2026

DESIGNED BY: MBMITCHELL

DRAWN BY: JMMUSSO

SURVEYED BY:

FB NO. XXXXXX

INTERIM REVIEW
Not intended for construction, bidding or permit purposes.
Engineer: WILLIAM R. SAGASTIZADO, P.E.
P.E. Serial No.: 125999
Date: MAY 2026

CITY OF HOUSTON
HOUSTON PUBLIC WORKS

SCOTT STREET NO. 1 LIFT STATION REHABILITATION
MECHANICAL

WET WEATHER LIFT STATION LOWER LEVEL-PROPOSED

WBS NUMBER	FOR CITY OF HOUSTON USE ONLY
R-000267-127A-4	
DRAWING SCALE	
AS NOTED	
CITY OF HOUSTON PM	
TAHA LOTIA	
DWG NO. 2-M-21	
SHEET NO. 82 OF 220	

K:\00050\00050-0099-01 Scott St. No. 1 Lift Station Rehabilitation - Phase II Design\2 Design Phase\CAD\MECH-1.dwg

0 1 2 3 4 5 ORIGINAL SCALE IN INCHES FOR REDUCED PLANS

NO.	DATE	REVISIONS	APP.

0 1 2 4 8 12
SCALE: 1/4" = 1'

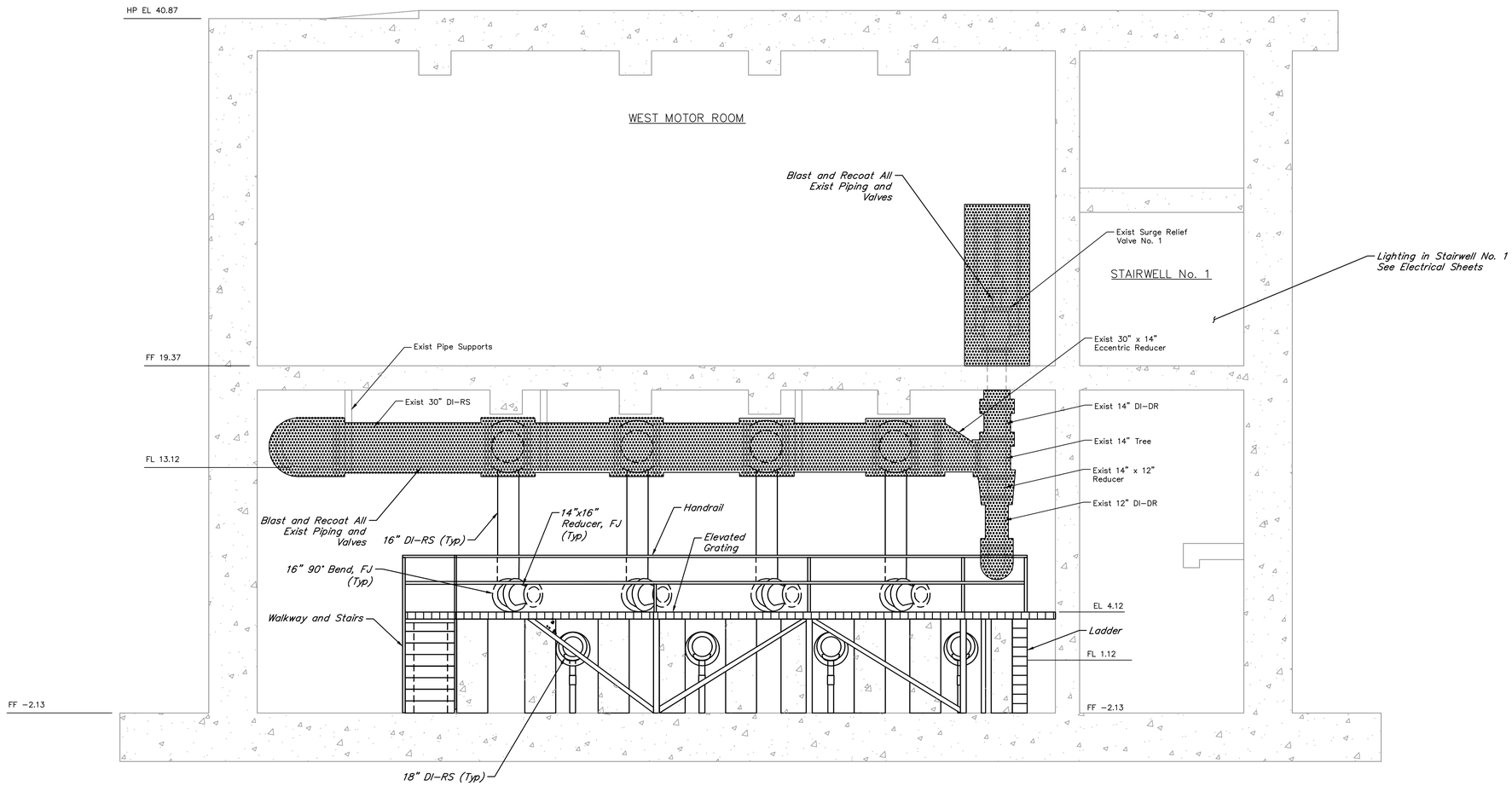

B SECTION
SCALE: 1/4"=1'-0"

LEGEND:

RECOAT

NOTES:

1. All proposed valves shall be installed with position indicator.
2. Contractor shall apply protective coating to all proposed above ground piping. Riser and hatches shall be labeled to correspond to the respective pump number.
3. All aluminum grating, handrails, and access hatches shall receive shop applied powder coating. Access hatches shall be COH color forest green. Rigid safety grating shall be color COH safety yellow. All other grating shall be color COH safety yellow. Handrails shall be color COH safety yellow.
4. Contractor shall stencil directional arrows and process line identification on all pipes at no greater than 10-foot interval.

QUIDDITY
Texas Board of Professional Engineers and Land Surveyors Reg. No. F-23290
6330 West Loop South, Suite 150 • Bellaire, TX 77401 • 713.777.5337

JOB NO: 00050-0099-01 DATE: 1/19/2026

APPROVED BY:

DATE: MAY 2026

DESIGNED BY: MBMITCHELL

DRAWN BY: JMMUSSO

SURVEYED BY:

FB NO. XXXXXX

INTERIM REVIEW
Not intended for construction, bidding or permit purposes.
Engineer: WILLIAM R. SAGASTIZADO, P.E
P.E. Serial No.: 125999
Date: MAY 2026

CITY OF HOUSTON
HOUSTON PUBLIC WORKS

SCOTT STREET NO. 1 LIFT STATION REHABILITATION
MECHANICAL

WET WEATHER LIFT STATION MEZZANINE LEVEL-PROPOSED

WBS NUMBER
R-000267-127A-4
DRAWING SCALE
AS NOTED
CITY OF HOUSTON PM
TAHA LOTIA
DWG NO. 2-M-22
SHEET NO. 83 OF 220

FOR CITY OF HOUSTON USE ONLY

K:\00050\00050-0099-01 Scott St. No. 1 Lift Station Rehabilitation - Phase II Design\2 Design Phase\CAD\MECH-3.dwg

ORIGINAL SCALE IN INCHES FOR REDUCED PLANS

NO.	DATE	REVISIONS	APP.

SCALE: 1/4" = 1'

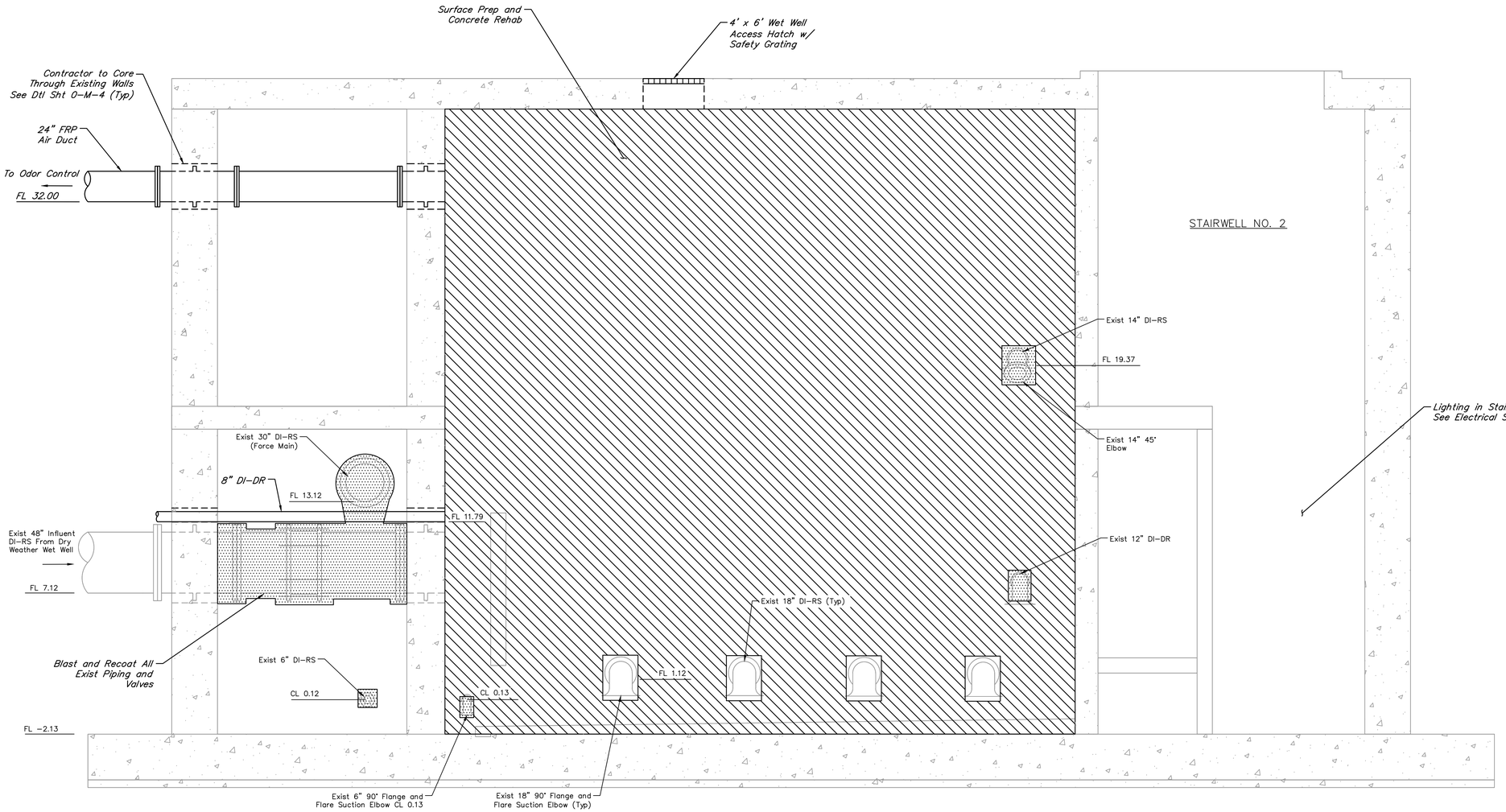

C **SECTION**

SCALE: 1/4"=1'-0"

NOTES:

1. Interior Excluded for Clarity.
2. Contractor shall apply protective coating to all proposed above ground piping. Riser and hatches shall be labeled to correspond to the respective pump number.
3. Surface prep and concrete rehab to include underside of top slab.
4. All aluminum grating, handrails, and access hatches shall receive shop applied powder coating. Access hatches shall be COH color forest green. Rigid safety grating shall be color COH safety yellow. All other grating shall be color COH safety yellow. Handrails shall be color COH safety yellow.
5. All hatch covers shall be powder-coated forest green and labeled. Access hatches shall be aluminum per Specification 11311. See Dtl Sht 0-M-6.
6. Contractor shall stencil directional arrows and process line identification on all pipes at no greater than 10-foot interval.

LEGEND:

RECOAT

HYDROBLAST

QUIDDITY

Texas Board of Professional Engineers and Land Surveyors Reg. No. F-23290
6330 West Loop South, Suite 150 • Bellaire, TX 77401 • 713.777.5337

JOB NO: 00050-0099-01 DATE: 1/19/2026

APPROVED BY:

DATE: MAY 2026

DESIGNED BY: MBMITCHELL

DRAWN BY: JMMUSSO

SURVEYED BY:

FB NO. XXXXXX

INTERIM REVIEW

Not intended for construction, bidding or permit purposes.

Engineer: WILLIAM R. SAGASTIZADO, P.E.

P.E. Serial No.: 125999

Date: MAY 2026

CITY OF HOUSTON

HOUSTON PUBLIC WORKS

SCOTT STREET NO. 1 LIFT STATION REHABILITATION

MECHANICAL

WET WEATHER LIFT STATION PROPOSED

WBS NUMBER	FOR CITY OF HOUSTON USE ONLY
R-000267-127A-4	
DRAWING SCALE	
AS NOTED	
CITY OF HOUSTON PM	
TAHA LOTIA	
DWG NO. 2-M-23	
SHEET NO. 84 OF 220	

K:\00050\00050-0099-01 Scott St. No. 1 Lift Station Rehabilitation - Phase II Design\2 Design Phase\CAD\MECH-4.dwg

0 1 2 3 4 5 ORIGINAL SCALE IN INCHES FOR REDUCED PLANS

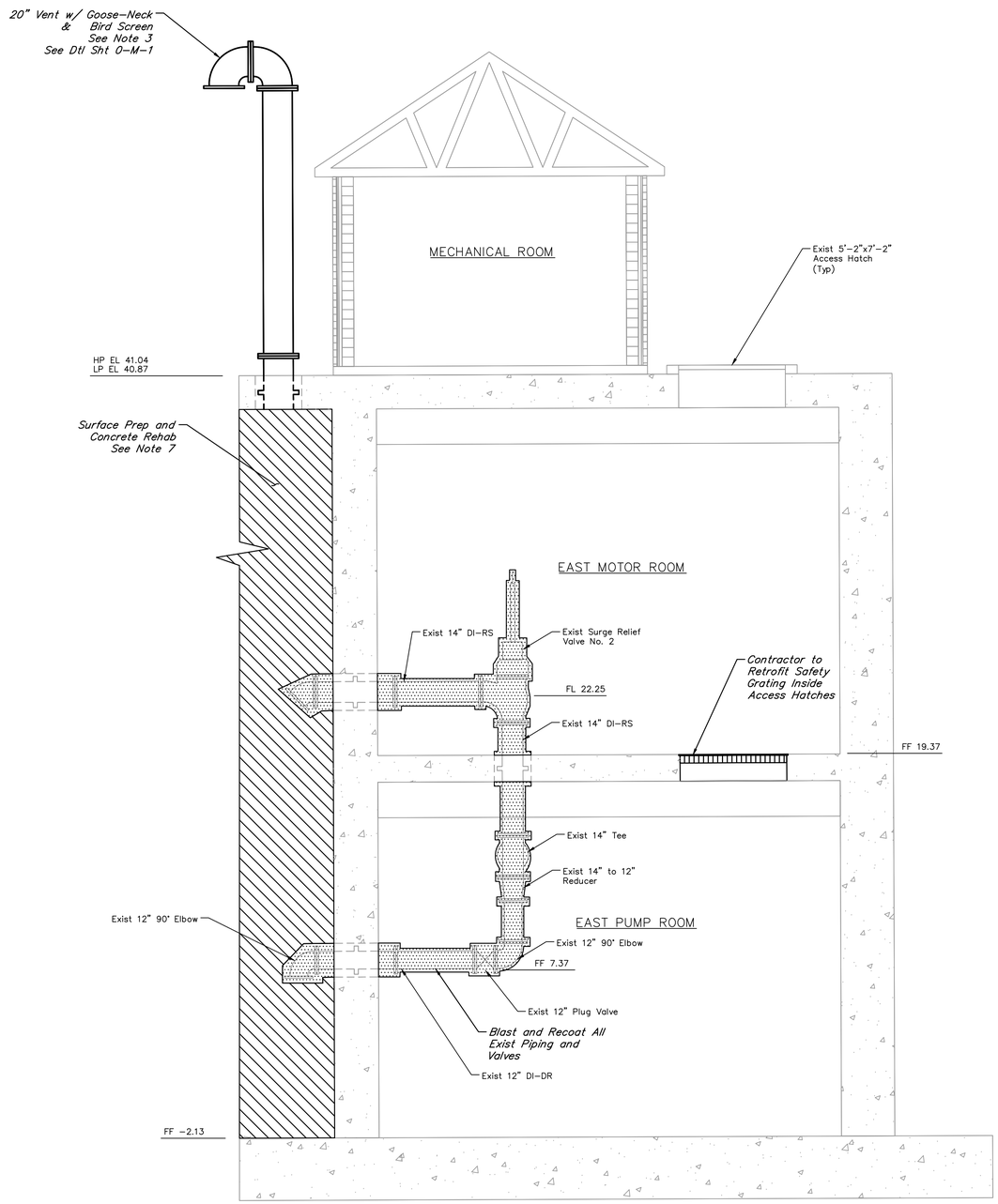

D **SECTION**
SCALE: 1/4"=1'-0"

NO.	DATE	REVISIONS	APP.

0 1 2 4 8 12
SCALE: 1/4" = 1'

LEGEND:

RECOAT

HYDROBLAST

NOTES:

1. Exterior Excluded for Clarity.
2. All proposed valves shall be installed with position indicator.
3. Contractor to field verify height of vent.
4. Contractor shall apply protective coating to all proposed above ground piping. Riser and hatches shall be labeled to correspond to the respective pump number.
5. All aluminum grating, handrails, and access hatches shall receive shop applied powder coating. Access hatches shall be COH color forest green. Rigid safety grating shall be color COH safety yellow. All other grating shall be color COH safety yellow. Handrails shall be color COH safety yellow.
6. All hatch covers shall be powder-coated forest green and labeled. Access hatches shall be aluminum per Specification 11311. See Dtl Sht O-M-6.
7. Surface prep and concrete rehab to include underside of top slab.
8. Contractor shall stencil directional arrows and process line identification on all pipes at no greater than 10-foot interval.

QUIDDITY
Texas Board of Professional Engineers and Land Surveyors Reg. No. F-23290
6330 West Loop South, Suite 150 • Bellaire, TX 77401 • 713.777.5337

JOB NO: 00050-0099-01 DATE: 1/19/2026

APPROVED BY:

DATE: MAY 2026

DESIGNED BY: MBMITCHELL

DRAWN BY: JMMUSSO

SURVEYED BY:

FB NO. XXXXXX

INTERIM REVIEW
Not intended for construction, bidding or permit purposes.
Engineer: WILLIAM R. SAGASTIZADO, P.E.
P.E. Serial No.: 125999
Date: MAY 2026

CITY OF HOUSTON
HOUSTON PUBLIC WORKS

SCOTT STREET NO. 1 LIFT STATION REHABILITATION

MECHANICAL

WET WEATHER LIFT STATION EAST SECTION-PROPOSED

WBS NUMBER
R-000267-127A-4
DRAWING SCALE
AS NOTED
CITY OF HOUSTON PM
TAHA LOTIA
DWG NO. 2-M-24
SHEET NO. 85 OF 220

FOR CITY OF HOUSTON USE ONLY

K:\00050\00050-0099-01 Scott St. No. 1 Lift Station Rehabilitation - Phase II Design\2 Design Phase\CAD\MECH-4.dwg

0 1 2 3 4 5

ORIGINAL SCALE IN INCHES FOR REDUCED PLANS

NO.	DATE	REVISIONS	APP.

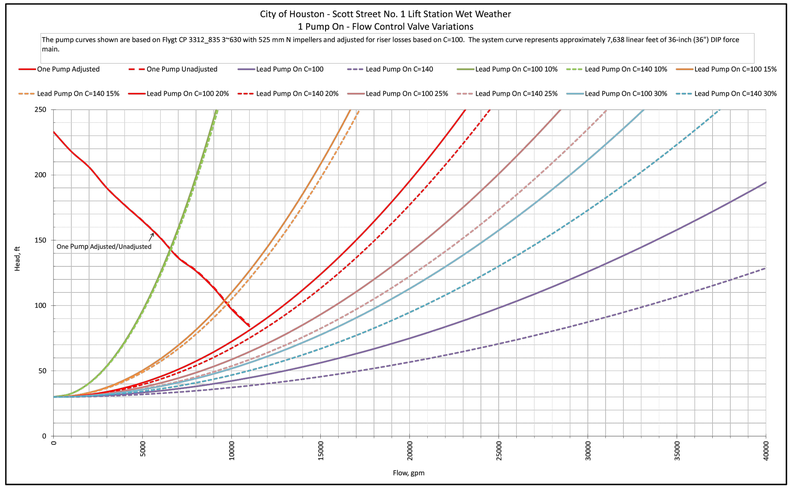

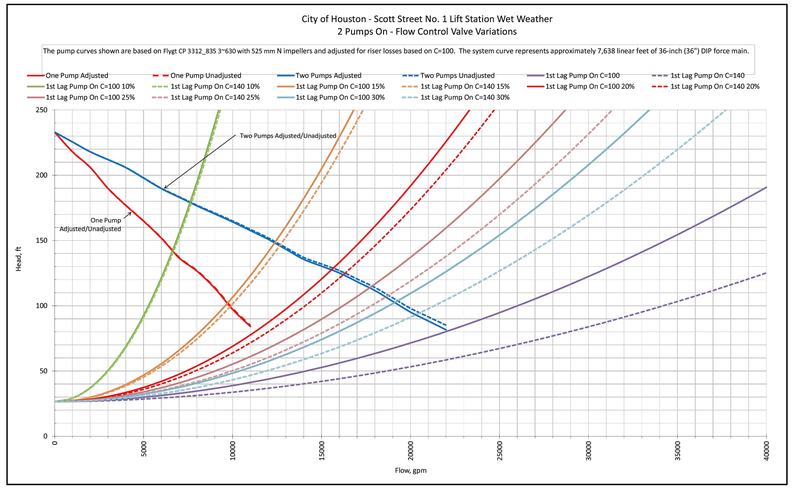

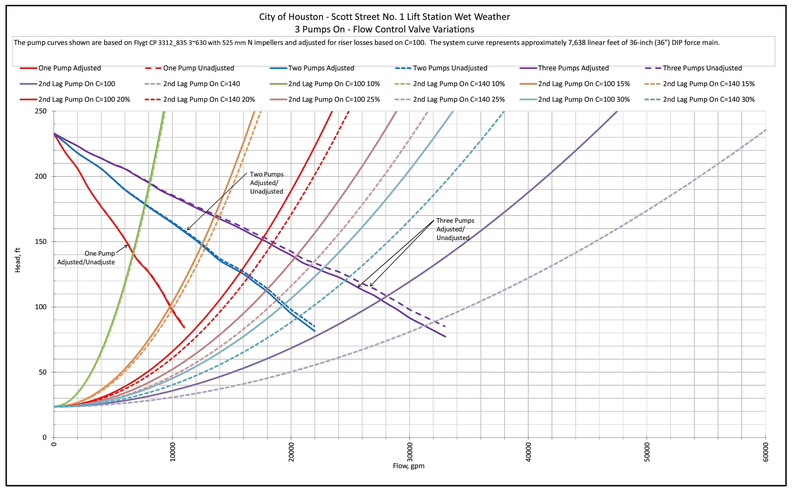

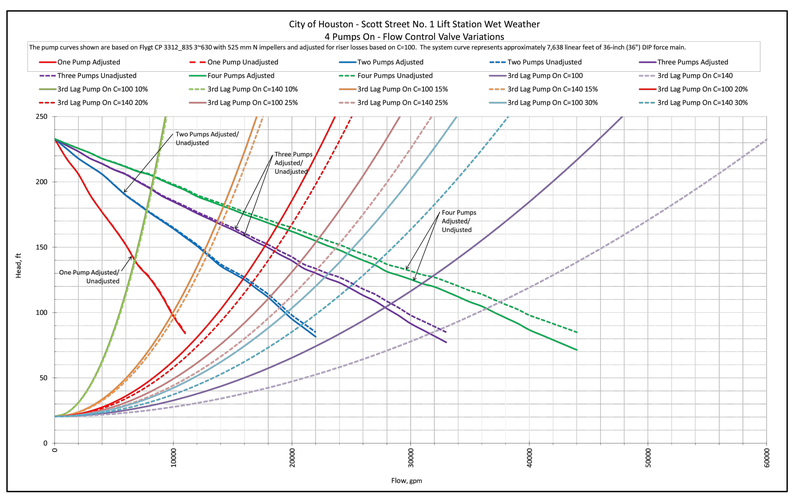

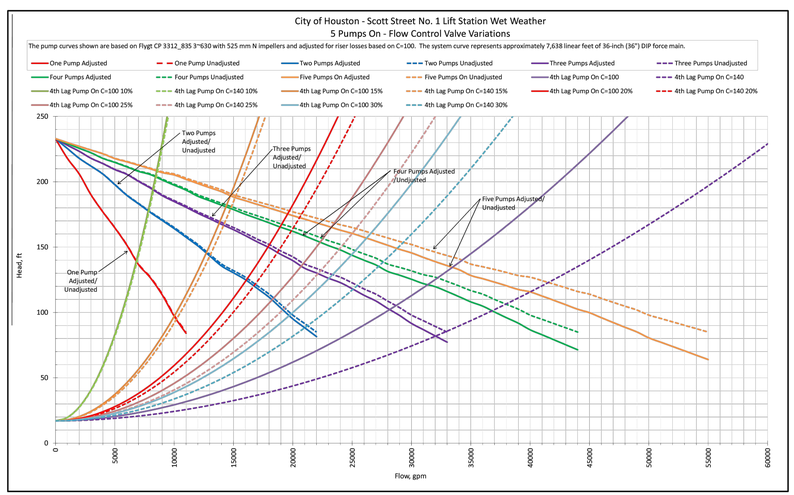

QUIDDITY

Texas Board of Professional Engineers and Land Surveyors Reg. No. F-23290
6330 West Loop South, Suite 150 • Bellaire, TX 77401 • 713.777.5337

JOB NO: 00050-0099-01 DATE: 1/19/2026

APPROVED BY:

DATE: MAY 2026

DESIGNED BY: MBMITCHELL

DRAWN BY: JMMUSSO

SURVEYED BY:

FB NO. XXXXXX

INTERIM REVIEW

Not intended for construction, bidding or permit purposes.

Engineer: WILLIAM R. SAGASTIZADO, P.E.

P.E. Serial No.: 125999

Date: MAY 2026

CITY OF HOUSTON

HOUSTON PUBLIC WORKS

SCOTT STREET NO. 1 LIFT STATION REHABILITATION

MECHANICAL

WET WEATHER PUMP STATION PUMP DATA AND CURVES SHEET 1 OF 3

WBS NUMBER	FOR CITY OF HOUSTON USE ONLY
R-000267-127A-4	
DRAWING SCALE	
AS NOTED	
CITY OF HOUSTON PM	
TAHA LOTIA	
DWG NO. 2-M-25	
SHEET NO. 86 OF 220	

K:\00050\00050-0099-01 Scott St. No. 1 Lift Station Rehabilitation - Phase II Design\2 Design Phase\CAD\MECH-1.dwg

0 1 2 3 4 5

ORIGINAL SCALE IN INCHES FOR REDUCED PLANS

NO.	DATE	REVISIONS	APP.

City of Houston - Scott Street No. 1 Lift Station Wet Weather
Small Lead Pump - Flow Control Valve Variations

The pump curves shown are based on FLYGT NP 3202 LT3~615 pumps with 342 mmN impellers and adjusted for riser losses based on C=100. The system curve represents approximately 7,640 linear feet of 36-inch (36") DIP force main.

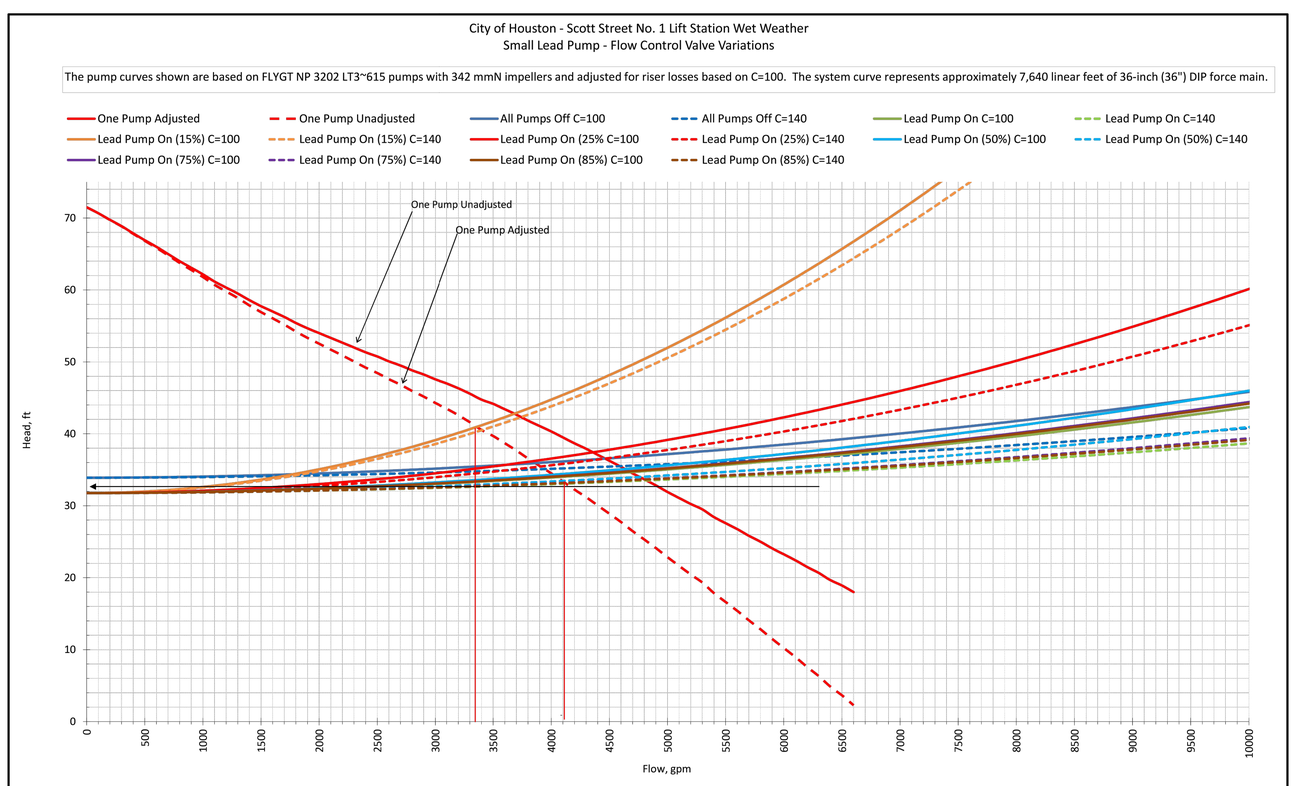

QUIDDITY

Texas Board of Professional Engineers and Land Surveyors Reg. No. F-23290
6330 West Loop South, Suite 150 • Bellaire, TX 77401 • 713.777.5337

JOB NO: 00050-0099-01 DATE: 1/19/2026

APPROVED BY:

DATE: MAY 2026

DESIGNED BY: MBMITCHELL

DRAWN BY: JMMUSSO

SURVEYED BY:

FB NO. XXXXXX

INTERIM REVIEW
Not intended for construction, bidding or permit purposes.
Engineer: WILLIAM R. SAGASTIZADO, P.E.
P.E. Serial No.: 125999
Date: MAY 2026

CITY OF HOUSTON
HOUSTON PUBLIC WORKS

SCOTT STREET NO. 1 LIFT STATION REHABILITATION

MECHANICAL

WET WEATHER PUMP STATION PUMP DATA AND CURVES SHEET 2 OF 3

WBS NUMBER	FOR CITY OF HOUSTON USE ONLY
R-000267-127A-4	
DRAWING SCALE	
AS NOTED	
CITY OF HOUSTON PM	
TAHA LOTIA	
DWG NO. 2-M-26	
SHEET NO. 87 OF 220	

K:\00050\00050-0099-01 Scott St. No. 1 Lift Station Rehabilitation - Phase II Design\2 Design Phase\CAD\MECH-1.dwg

0 1 2 3 4 5 ORIGINAL SCALE IN INCHES FOR REDUCED PLANS

NO.	DATE	REVISIONS	APP.

WET WEATHER LIFT STATION OPERATION TABLE LARGE PUMPS

RISING LEVEL CYCLE – WET WEATHER PUMPS		
ELEVATION	ACTION	PUMP(S) IN OPERATION
11.00	LEAD WET PUMP TURNS ON	LEAD WET PUMP ON
16.00	SECOND WET PUMP TURNS ON	LEAD AND SECOND WET PUMPS ON
21.00	THIRD WET PUMP TURNS ON	LEAD, SECOND, & THIRD WET PUMPS ON
25.50	FORTH WET PUMP TURNS ON	LEAD, SECOND, THIRD, & FOURTH WET PUMPS ON
30.25	FIFTH WET PUMP TURNS ON	LEAD, SECOND, THIRD, FOURTH, & FIFTH WET PUMPS ON
30.25	HIGH WATER ALARM	HIGH WATER ALARM SOUND
FALLING LEVEL CYCLE – WET WEATHER PUMPS		
ELEVATION	ACTION	PUMP(S) IN OPERATION
30.25	HIGH WATER LEVEL ALARM OFF	LEAD, SECOND, THIRD, FOURTH, FIFTH WET PUMPS ON
30.00	FIFTH WET PUMP TURNS OFF	LEAD, SECOND, THIRD, & FOURTH WET PUMPS ON
25.25	FORTH WET PUMP TURNS OFF	LEAD, SECOND & THIRD WET PUMPS ON
20.75	THIRD WET PUMP TURNS OFF	LEAD & SECOND WET PUMPS ON
17.75	SECOND WET PUMP TURNS OFF	LEAD WET PUMP ON
10.75	LEAD WET PUMP TURNS OFF	ALL PUMPS STOPPED

WET WEATHER LIFT STATION OPERATION TABLE SMALL PUMPS

RISING LEVEL CYCLE – WET WEATHER PUMPS		
ELEVATION	ACTION	PUMP(S) IN OPERATION
7.75	LEAD WET PUMP TURNS ON	LEAD WET PUMP ON
FALLING LEVEL CYCLE – WET WEATHER PUMPS		
ELEVATION	ACTION	PUMP(S) IN OPERATION
7.50	LEAD PUMP TURNS OFF	ALL PUMPS STOPPED

PUMP DATA TABLE – WET WEATHER PUMPS

PUMP CHARACTERISTICS	PUMP No. 1	PUMP No. 2	PUMP No. 3	PUMP No. 4	PUMP No. 5	PUMP No. 6	PUMP No. 7	PUMP No. 8
MOTOR DATA NOMINAL SIZE (HP) MAX SPEED (RPM)	 60 1175	 60 1175	 385 1190	 385 1190	 385 1190	 385 1190	 385 1190	 385 1190
SOLIDS PASSAGE MIN SPHERE (IN)	 4	 4	 4	 4	 4	 4	 4	 4
CAPACITY (GPM) DESIGN RUNOUT	 4167 7700	 4167 7700	 6944 11600	 6944 11600	 6944 11600	 6944 11600	 6944 11600	 6944 11600
DISCHARGE HEAD (FT) DESIGN RUNOUT SHUT OFF	 39.55 8.36 71.75	 39.55 8.36 71.75	 146.17 76.55 175	 146.17 76.55 175	 146.17 76.55 175	 146.17 76.55 175	 146.17 76.55 175	 146.17 76.55 175
EFFICIENCY (%) DESIGN	 60%	 60%	 60%	 60%	 60%	 60%	 60%	 60%
NPSHR (FT) DESIGN RUNOUT	 21.54 50	 21.54 50	 22.87 62	 22.87 62	 22.87 62	 22.87 62	 22.87 62	 22.87 62

QUIDDITY
Texas Board of Professional Engineers and Land Surveyors Reg. No. F-23290
6330 West Loop South, Suite 150 • Bellaire, TX 77401 • 713.777.5337

JOB NO: 00050-0099-01 DATE: 1/19/2026

APPROVED BY:

DATE: MAY 2026

DESIGNED BY: MBMITCHELL

DRAWN BY: JMMUSSO

SURVEYED BY:

FB NO. XXXXXX

INTERIM REVIEW
Not intended for construction, bidding or permit purposes.
Engineer: WILLIAM R. SAGASTIZADO, P.E.
P.E. Serial No.: 125999
Date: MAY 2026

CITY OF HOUSTON
HOUSTON PUBLIC WORKS

SCOTT STREET NO. 1 LIFT STATION REHABILITATION

MECHANICAL

WET WEATHER PUMP STATION PUMP DATA AND CURVES SHEET 3 OF 3

WBS NUMBER
R-000267-127A-4

FOR CITY OF HOUSTON USE ONLY

DRAWING SCALE
AS NOTED

CITY OF HOUSTON PM
TAHA LOTIA

DWG NO. 2-M-27

SHEET NO. 88 OF 220

K:\00050\00050-0099-01 Scott St. No. 1 Lift Station Rehabilitation - Phase II Design\2 Design Phase\CAD\MECH-1.dwg

0 1 2 3 4 5 ORIGINAL SCALE IN INCHES FOR REDUCED PLANS

NO.	DATE	REVISIONS	APP.

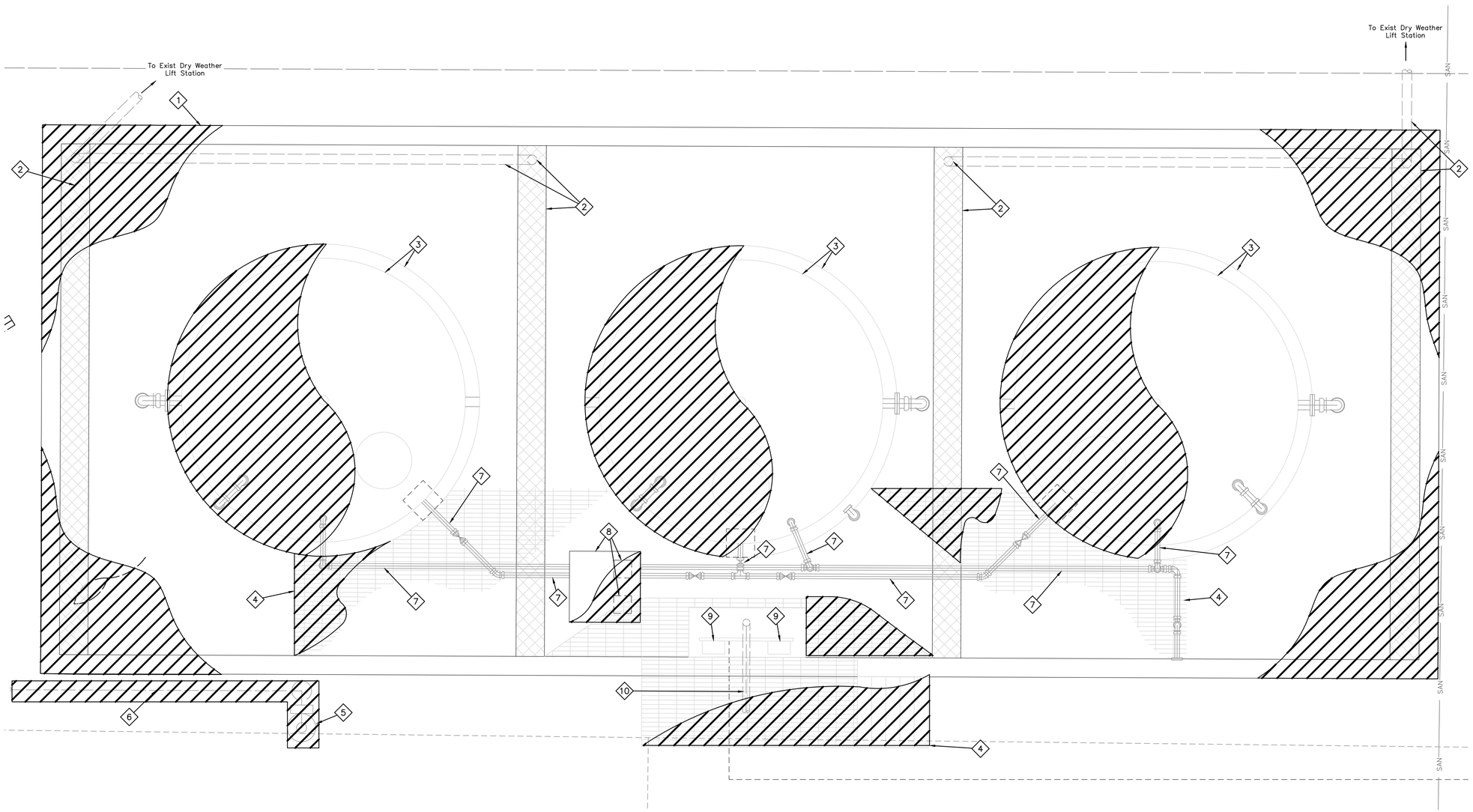

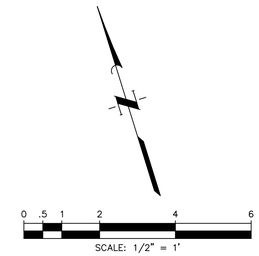

LEGEND:

DEMOLISH

NOTES:

1. Demolition and disposal of the existing chemical system must be done in accordance to local, state, and federal regulations.
2. The existing demolition plans are based from the City of Houston's record drawings. Actual existing conditions may differ than what is on the field. Contractor shall field verify the existing conditions and dimensions as necessary to perform the work.
3. City of Houston retains first righe of refusal on all demolition items. Contractor shall coordinate with City of Houston Wastewater OPS on all equipment to be salvaged. Contractor shall deliver salvaged items to a location as determined by City of Houston Wastewater OPS.

ITEMS OF WORK

No.	DESCRIPTION	No.	DESCRIPTION
1	Demolish the existing concrete containment walls and foundation.	6	Demolish the existing 1–1/4" PW–PVC line.
2	Demolish the existing floor trench, grating, and drain lines.	7	Demolish all above ground piping, fittings, valves, supports, and miscellaneous items within the chemical containment area.
3	Demolish the existing ferrous sulfate chemical storage tanks and tank pedestals.	8	Demolish the existing chemical feed pumps, piping, fittings, and valves within the FRP Building and the FRP building.
4	Demolish the existing fabricated steel grating, stairs, and framing.	9	Demolish the existing chemical system control panels and electrical conduits.
5	Demolish the existing emergency eye wash and shower station.	10	Pull out and demolish the existing chemical tubing within chemical carrier pipe (from Process Area 3 to Process Area 1) and demolish the existing chemical carrier pipe.

QUIDDITY
Texas Board of Professional Engineers and Land Surveyors Reg. No. F-23290
6330 West Loop South, Suite 150 • Bellaire, TX 77401 • 713.777.5337

JOB NO: 00050–0099–01 DATE: 1/19/2026

APPROVED BY:

DATE: MAY 2026

DESIGNED BY: CTHOMAS

DRAWN BY: CHUDSON

SURVEYED BY:

FB NO. XXXXXX

INTERIM REVIEW
Not intended for construction, bidding or permit purposes.
Engineer: HARRY W. ISENSEE III, P.E.
P.E. Serial No.: 144401
Date: MAY 2026

CITY OF HOUSTON
HOUSTON PUBLIC WORKS

SCOTT STREET NO. 1 LIFT STATION REHABILITATION

MECHANICAL

CHEMICAL FEED SYSTEM DEMOLITION PLAN

WBS NUMBER
R–000267–127A–4
DRAWING SCALE
AS NOTED
CITY OF HOUSTON PM
TAHA LOTIA
DWG NO. 3–M–1
SHEET NO. 89 OF 220

FOR CITY OF HOUSTON USE ONLY

K:\00050\00050-0099-01 Scott St. No. 1 Lift Station Rehabilitation - Phase II Design\2 Design Phase\CAD\MECH-2.dwg

ORIGINAL SCALE IN INCHES FOR REDUCED PLANS

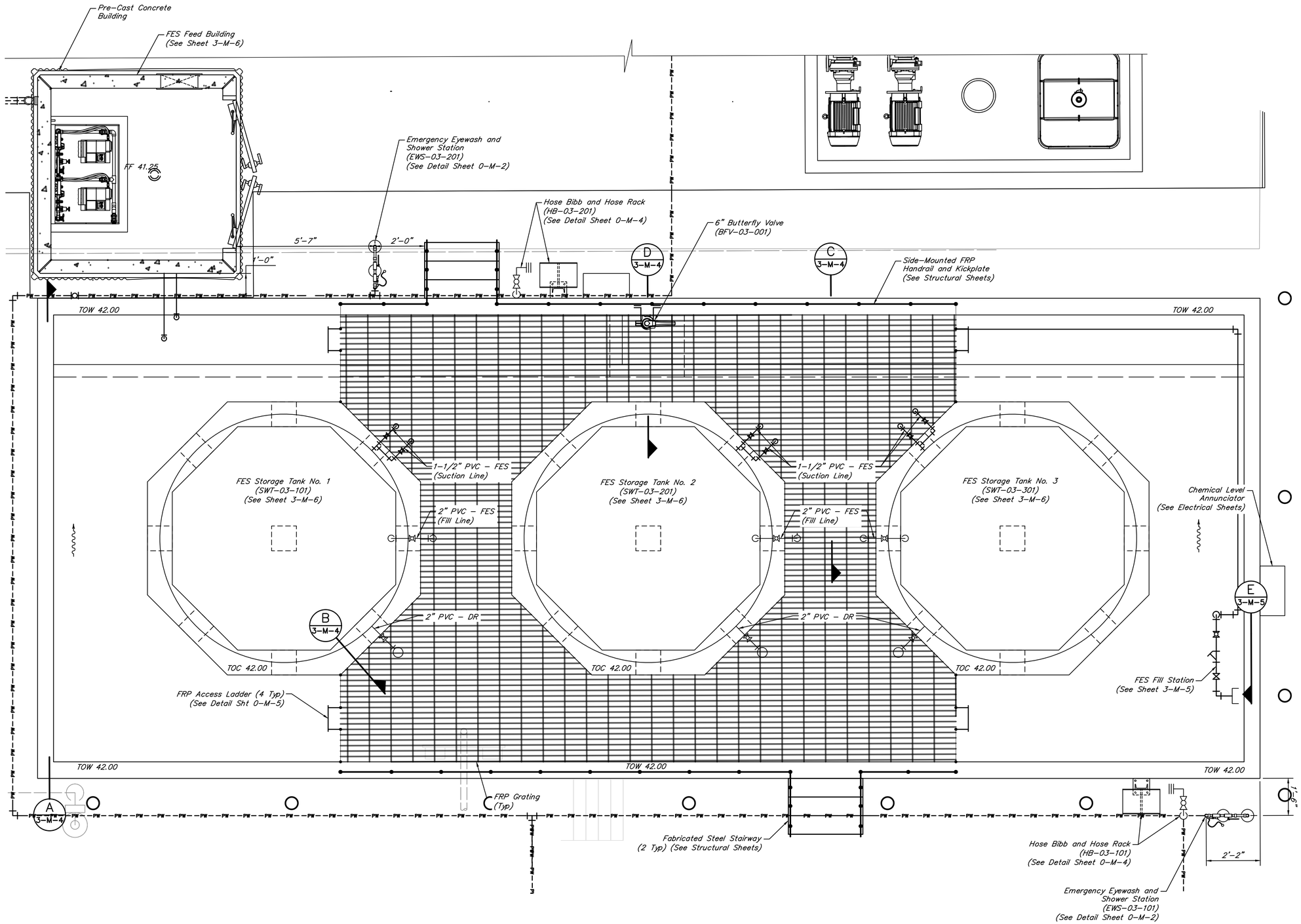

CHEMICAL SYSTEM PROPOSED UPPER PLAN EL 42.00

SCALE: 1/2" = 1'-0"

NO.	DATE	REVISIONS	APP.

SCALE: 1/2" = 1'

NOTES:

1. Pipes with diameter less than 3" do not have all valves and fittings shown and are not labeled with valve and accessories schedule. Refer to P&ID.
2. Chemical piping running along the inside wall of the chemical containment pad shall be mounted with FRP unistrut & SS hardware. The maximum distance between supports shall be 4'-0".
3. Chemical piping running to and from the chemical tanks and not supported along the inside wall of the chemical containment pad shall be mounted with pipe hangers & SS hardware. The maximum distance between supports shall be 4'-0".
4. All aluminum grating, handrails, and access hatches shall receive shop applied powder coating. Aluminum grating and handrails shall be COH yellow and access hatches shall be COH forest green.
5. All stairs shall have non-slip steps.

QUIDDITY

Texas Board of Professional Engineers and Land Surveyors Reg. No. F-23290
6330 West Loop South, Suite 150 • Bellaire, TX 77401 • 713.777.5337

JOB NO: 00050-0099-01 DATE: 1/19/2026

APPROVED BY:	
DATE: MAY 2026	
DESIGNED BY: CTHOMAS	
DRAWN BY: CHUDSON	
SURVEYED BY:	
FB NO. XXXXXX	

INTERIM REVIEW
Not intended for construction, bidding or permit purposes.
Engineer: HARRY W. ISENSEE III, P.E.
P.E. Serial No.: 144401
Date: MAY 2026

CITY OF HOUSTON
HOUSTON PUBLIC WORKS

SCOTT STREET NO. 1 LIFT STATION REHABILITATION
MECHANICAL

CHEMICAL STORAGE AND CONTAINMENT UPPER PLAN

WBS NUMBER	FOR CITY OF HOUSTON USE ONLY
R-000267-127A-4	
DRAWING SCALE	
AS NOTED	
CITY OF HOUSTON PM	
TAHA LOTIA	
DWG NO. 3-M-2	
SHEET NO. 90 OF 220	

K:\00050\00050-0099-01 Scott St. No. 1 Lift Station Rehabilitation - Phase II Design\2 Design Phase\CAD\MECH-2.dwg

ORIGINAL SCALE IN INCHES FOR REDUCED PLANS

NO.	DATE	REVISIONS	APP.

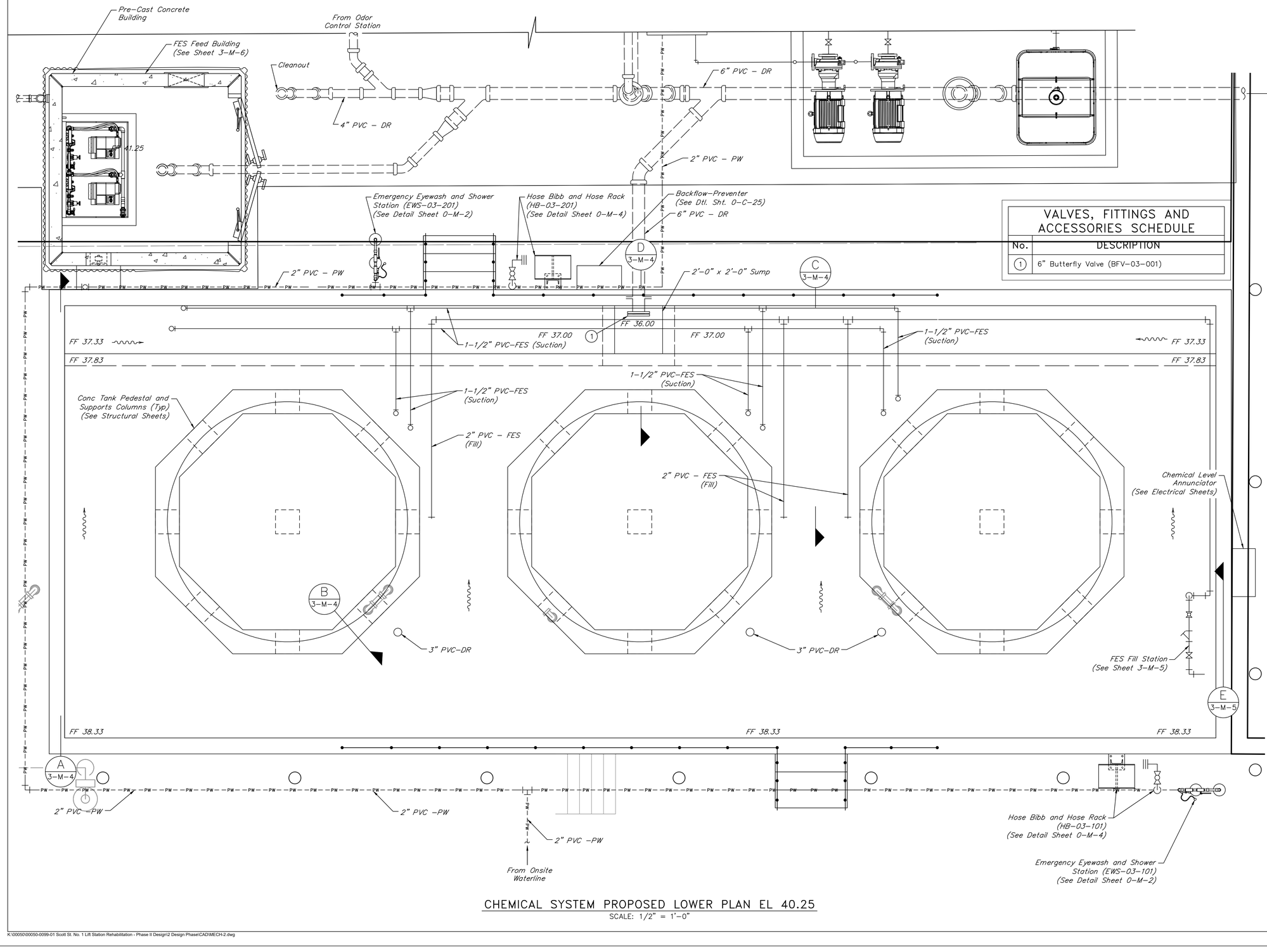

CHEMICAL SYSTEM PROPOSED LOWER PLAN EL 40.25

SCALE: 1/2" = 1'-0"

VALVES, FITTINGS AND ACCESSORIES SCHEDULE

No.	DESCRIPTION
1	6" Butterfly Valve (BFV-03-001)

0 .5 1 2 4 6

SCALE: 1/2" = 1'

NOTES:

1. Pipes with diameter less than 3" do not have all valves and fittings shown and are not labeled with valve and accessories schedule. Refer to P&ID.
2. Chemical piping running along the inside wall of the chemical containment pad shall be mounted with FRP unistrut & SS hardware. The maximum distance between supports shall be 4'-0".
3. Chemical piping running to and from the chemical tanks and not supported along the inside wall of the chemical containment pad shall be mounted with pipe hangers & SS hardware. The maximum distance between supports shall be 4'-0".
4. Backflow-preventer shall be mounted to the wall next to hose bibb and hose rack.
5. All stairs shall have non-slip steps.
6. All aluminum grating, handrails, and access hatches shall receive shop applied powder coating. Aluminum grating and handrails shall be COH yellow and access hatches shall be COH forest green.

QUIDDITY
Texas Board of Professional Engineers and Land Surveyors Reg. No. F-23290
6330 West Loop South, Suite 150 • Bellaire, TX 77401 • 713.777.5337

JOB NO: 00050-0099-01 DATE: 1/19/2026

APPROVED BY:

DATE: MAY 2026

DESIGNED BY: CTHOMAS

DRAWN BY: CHUDSON

SURVEYED BY:

FB NO. XXXXXX

INTERIM REVIEW
Not intended for construction, bidding or permit purposes.
Engineer: HARRY W. ISENSEE III, P.E.
P.E. Serial No.: 144401
Date: MAY 2026

CITY OF HOUSTON
HOUSTON PUBLIC WORKS

SCOTT STREET NO. 1 LIFT STATION REHABILITATION

MECHANICAL

CHEMICAL STORAGE AND CONTAINMENT LOWER PLAN

WBS NUMBER	FOR CITY OF HOUSTON USE ONLY
R-000267-127A-4	
DRAWING SCALE	
AS NOTED	
CITY OF HOUSTON PM	
TAHA LOTIA	
DWG NO. 3-M-3	
SHEET NO. 91 OF 220	

K:\00050\00050-0099-01 Scott St. No. 1 Lift Station Rehabilitation - Phase II Design\2 Design Phase\CAD\MECH-2.dwg

ORIGINAL SCALE IN INCHES FOR REDUCED PLANS

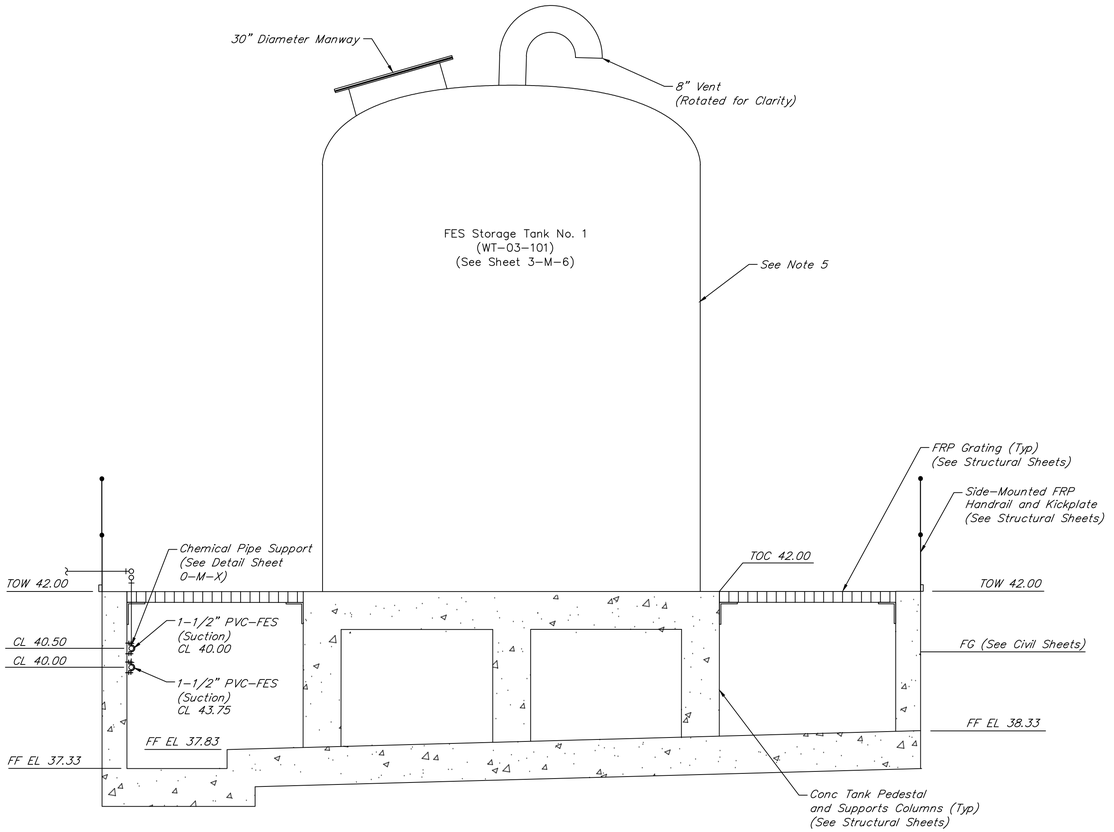

SECTION A
SCALE: 1/2" = 1'-0"

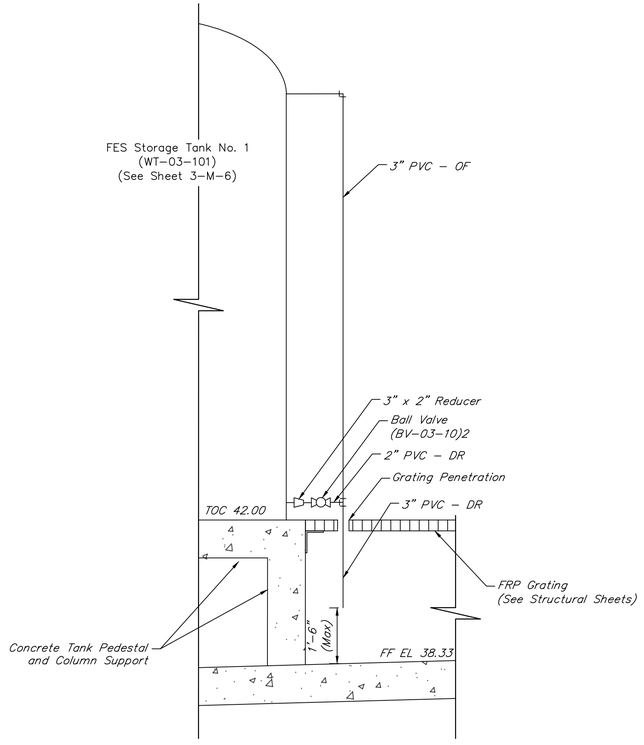

SECTION B
SCALE: 1/2" = 1'-0"

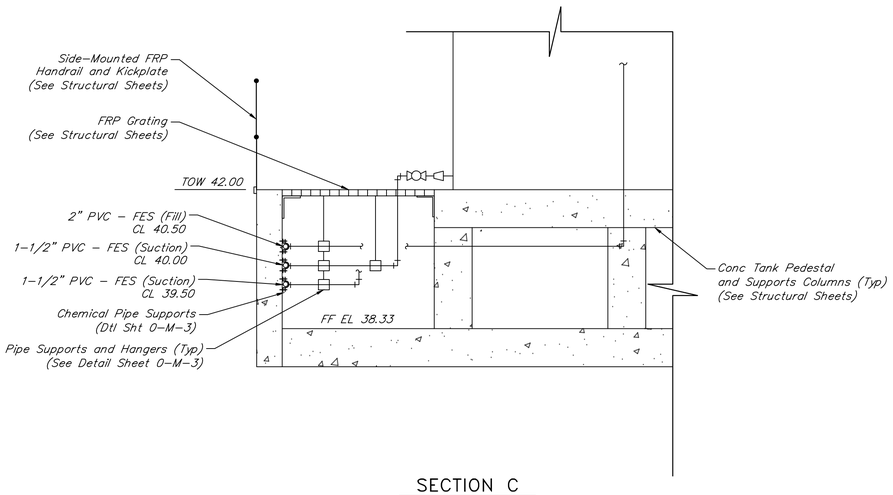

SECTION C
SCALE: 1/2" = 1'-0"

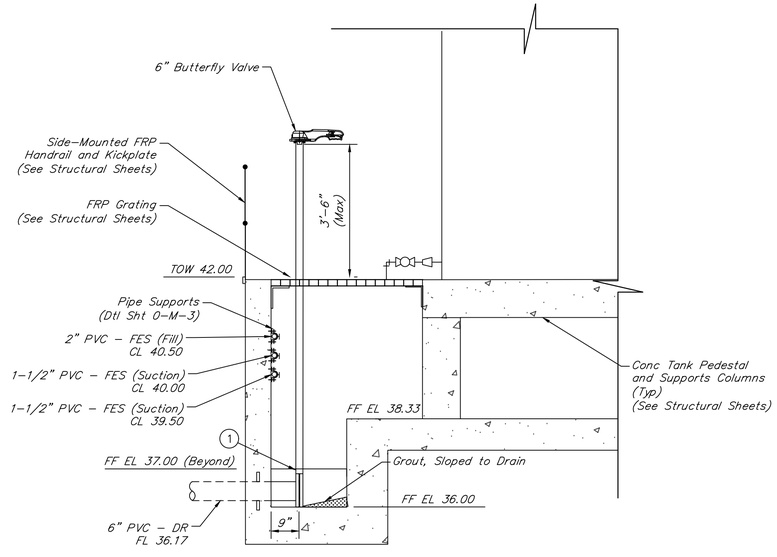

SECTION D
SCALE: 1/2" = 1'-0"

NO.	DATE	REVISIONS	APP.

VALVES, FITTINGS AND ACCESSORIES SCHEDULE

No.	DESCRIPTION
1	6" Butterfly Valve (BFV-03-001) (See Note 4)

NOTES:

1. Pipes with diameter less than 3" do not have all valves and fittings shown and are not labeled with valve and accessories schedule. Refer to P&ID.
2. Chemical piping running along the inside wall of the chemical containment pad shall be mounted with FRP unistrut & SS hardware. The maximum distance between supports shall be 4'-0".
3. Chemical piping running to and from the chemical tanks and not supported along the inside wall of the chemical containment pad shall be mounted with pipe hangers & SS hardware. The maximum distance between supports shall be 4'-0".
4. Install thermoplastic butterfly valves with extended lever operator. Attach valve to 6" PVC-DR line with 6" PVC solvent welded flange adapter. Notch grating for the valve stem.
5. Maximum sidewall height of tank is 120 inches.
6. All aluminum grating, handrails, and access hatches shall receive shop applied powder coating. Aluminum grating and handrails shall be COH forest green.

QUIDDITY
Texas Board of Professional Engineers and Land Surveyors Reg. No. F-23290
6330 West Loop South, Suite 150 • Bellaire, TX 77401 • 713.777.5337

JOB NO: 00050-0099-01 DATE: 1/19/2026

APPROVED BY:
DATE: MAY 2026
DESIGNED BY: CTHOMAS
DRAWN BY: CHUDSON
SURVEYED BY:
FB NO. XXXXXX

INTERIM REVIEW
Not intended for construction, bidding or permit purposes.
Engineer: HARRY W. ISENSEE III, P.E.
P.E. Serial No.: 144401
Date: MAY 2026

CITY OF HOUSTON
HOUSTON PUBLIC WORKS

SCOTT STREET NO. 1 LIFT STATION REHABILITATION

MECHANICAL

CHEMICAL FEED SYSTEM PROPOSED SECTION SHEET 1 OF 2

WBS NUMBER	FOR CITY OF HOUSTON USE ONLY
R-000267-127A-4	
DRAWING SCALE	
AS NOTED	
CITY OF HOUSTON PM	
TAHA LOTIA	
DWG NO. 3-M-4	
SHEET NO. 92 OF 220	

K:\00050\00050-0099-01 Scott St. No. 1 Lift Station Rehabilitation - Phase II Design\2 Design Phase\CAD\MECH-2.dwg

0 1 2 3 4 5 ORIGINAL SCALE IN INCHES FOR REDUCED PLANS

NO.	DATE	REVISIONS	APP.

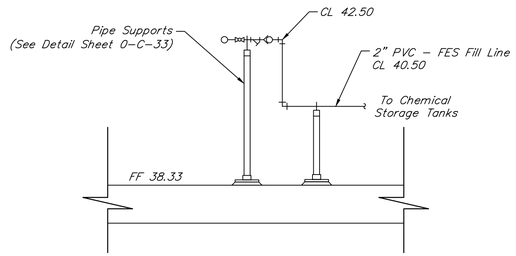

SECTION E

SCALE: 1/2" = 1'-0"

NOTES:

1. Pipes with diameter less than 3" do not have all valves and fittings shown and are not labeled with valve and accessories schedule. Refer to P&ID.
2. Mount all small diameter piping to wall with FRP unistrut & SS hardware. The maximum distance between supports shall be 4'-0".

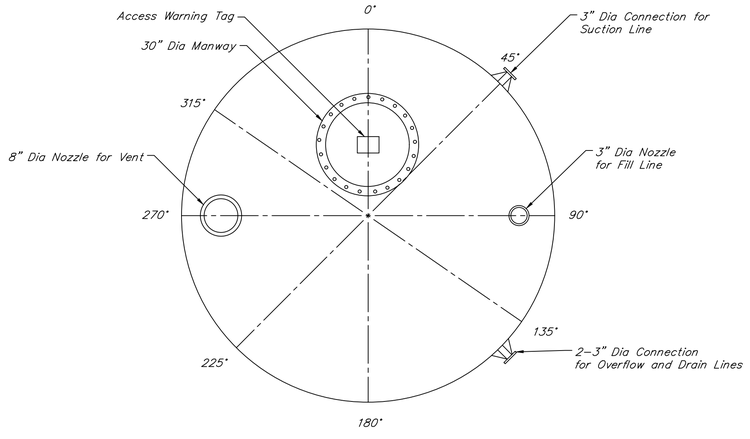

FERROUS SULFATE STORAGE TANK Nos. 1 & 2 TOP VIEW - TRUE ORIENTATION

NOT TO SCALE

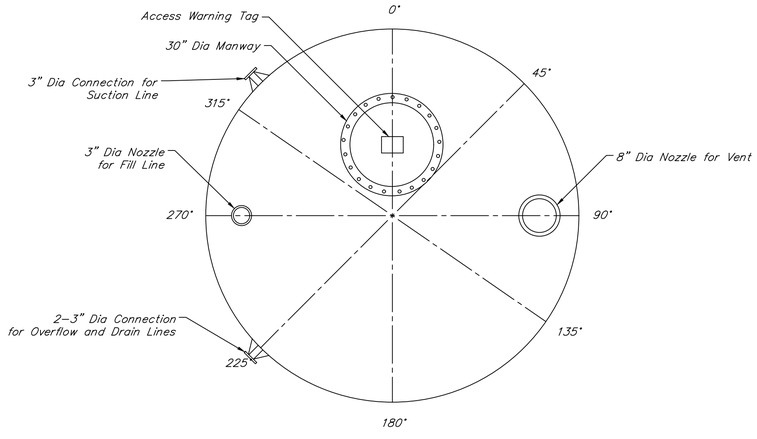

FERROUS SULFATE STORAGE TANK No. 3 TOP VIEW - TRUE ORIENTATION

NOT TO SCALE

QUIDDITY

Texas Board of Professional Engineers and Land Surveyors Reg. No. F-23290
6330 West Loop South, Suite 150 • Bellaire, TX 77401 • 713.777.5337

JOB NO: 00050-0099-01 DATE: 1/19/2026

APPROVED BY:

DATE: MAY 2026

DESIGNED BY: CTHOMAS

DRAWN BY: CHUDSON

SURVEYED BY:

FB NO. XXXXXX

INTERIM REVIEW

Not intended for construction, bidding or permit purposes.

Engineer: HARRY W. ISENSEE III, P.E.

P.E. Serial No.: 144401

Date: MAY 2026

CITY OF HOUSTON
HOUSTON PUBLIC WORKS

SCOTT STREET NO. 1
LIFT STATION REHABILITATION
MECHANICAL

CHEMICAL TANK DETAILS

WBS NUMBER
R-000267-127A-4
DRAWING SCALE
AS NOTED
CITY OF HOUSTON PM
TAHA LOTIA
DWG NO. 3-M-5
SHEET NO. 93 OF 220

FOR CITY OF HOUSTON USE ONLY

K:\00050\00050-0099-01 Scott St. No. 1 Lift Station Rehabilitation - Phase II Design\2 Design Phase\CAD\MECH-2.dwg

ORIGINAL SCALE IN INCHES FOR REDUCED PLANS

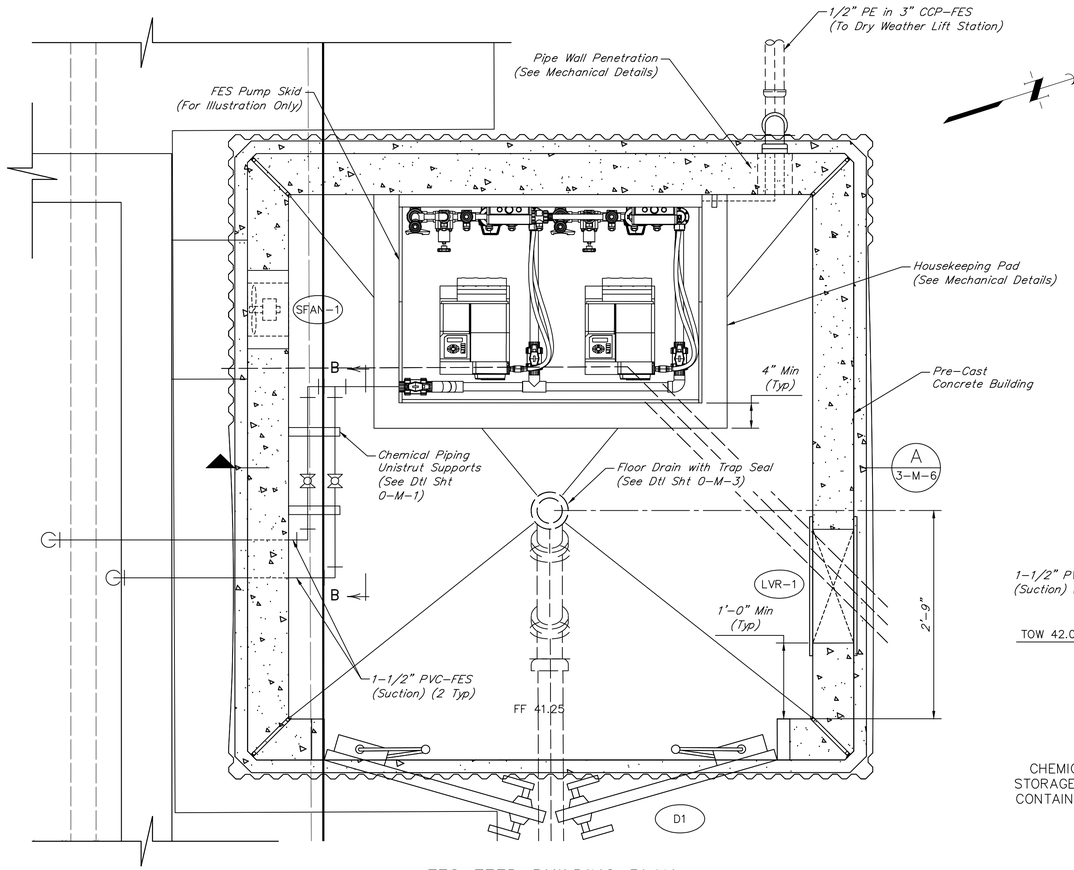

FES FEED BUILDING PLAN

SCALE: 1"=1'-0"

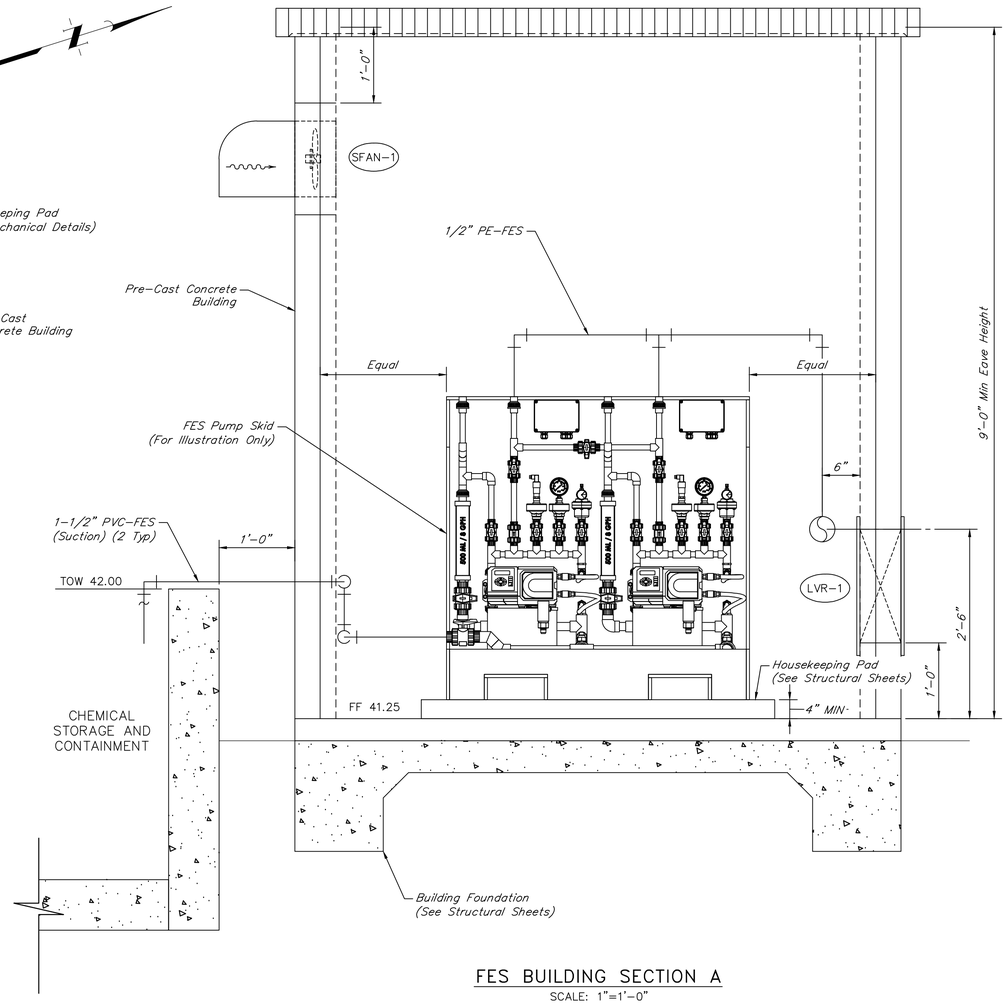

FES BUILDING SECTION A

SCALE: 1"=1'-0"

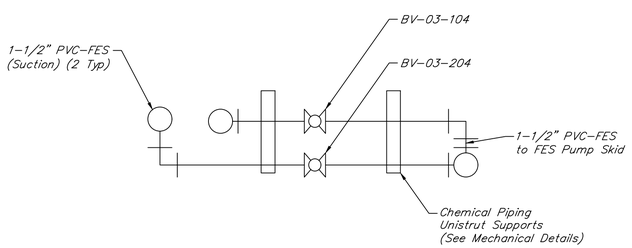

SECTION B-B

NOT TO SCALE

DOOR SCHEDULE

ID NO	BUILDING	DOOR DESCRIPTION						FRAME		REMARKS
		TYPE	WIDTH	HEIGHT	THICK	MAT'L	FINISH	MAT'L	FINISH	
(D1)	FES	DOUBLE	6'-0"	7'-0"	1'-3/4"	FRP	PAINT	FRP	GELCOAT	NOTES #1, 2, 3

DOOR NOTES:
1. Provide weatherstripping.
2. Provide padlock.
3. Provide windspeed rating for 110 mph with 3-second gusts.

FAN SCHEDULE

ID NO	LOCATION	MIN FLOW (CFM)	STATIC PRESSURE IN WC (IN)	BLADE DIA	MANUFACTURER /MODEL	MOUNTING		NOTES
						TYPE	LOCATION	
SFAN-1	FES FEED BUILDING	246	0.25	10"	DAYTON/1BLH6	WALL	HIGH	#1, 2, 3, 4, 5, 6, 7

FAN NOTES:
1. Provide disconnect switch.
2. Provide birdscreen.
3. Provide backdraft dampers.
4. Provide weather hood.
5. Provide factory mounted brackets and hanging kit.
6. Provide FRP material.
7. Interlock with local switch.

LOUVER SCHEDULE

ID NO	LOCATION	SERVICE	MIN SHUTTER FREE AREA (SF)	SIZE (IN)	MANUFACTURER /MODEL	MOUNTING		REMARKS
						TYPE	LOCATION	
LVR-1	FES FEED BUILDING	SUPPLY	0.4	12	DAYTON 805TT9	WALL	LOW	NOTES #1, 2

LOUVER NOTES:
1. Provide birdscreen.
2. Provide FRP material.

NO.	DATE	REVISIONS	APP.

NOTES:

1. Pipes with diameter less than 3" do not have all valves and fittings shown and are not labeled with valve and accessories schedule. Refer to P&ID.
2. Mount all small diameter piping to wall with FRP unistrut & SS hardware. The maximum distance between supports shall be 4'-0".

QUIDDITY
Texas Board of Professional Engineers and Land Surveyors Reg. No. F-23290
6330 West Loop South, Suite 150 • Bellaire, TX 77401 • 713.777.5337

JOB NO: 00050-0099-01 DATE: 1/19/2026

APPROVED BY:

DATE: MAY 2026

DESIGNED BY: CTHOMAS

DRAWN BY: CHUDSON

SURVEYED BY:

FB NO. XXXXXX

INTERIM REVIEW
Not intended for construction, bidding or permit purposes.
Engineer: HARRY W. ISENSEE III, P.E.
P.E. Serial No.: 144401
Date: MAY 2026

CITY OF HOUSTON
HOUSTON PUBLIC WORKS

SCOTT STREET NO. 1 LIFT STATION REHABILITATION

MECHANICAL

FES FEED BUILDING PLAN AND SECTIONS SHEET 1 OF 2

WBS NUMBER: R-000267-127A-4

FOR CITY OF HOUSTON USE ONLY

DRAWING SCALE: AS NOTED

CITY OF HOUSTON PM: TAHA LOTIA

DWG NO. 3-M-6

SHEET NO. 94 OF 220

K:\00050\00050-0099-01 Scott St. No. 1 Lift Station Rehabilitation - Phase II Design\2 Design Phase\CAD\MECH-2.dwg

0 1 2 3 4 5 ORIGINAL SCALE IN INCHES FOR REDUCED PLANS

NO.	DATE	REVISIONS	APP.

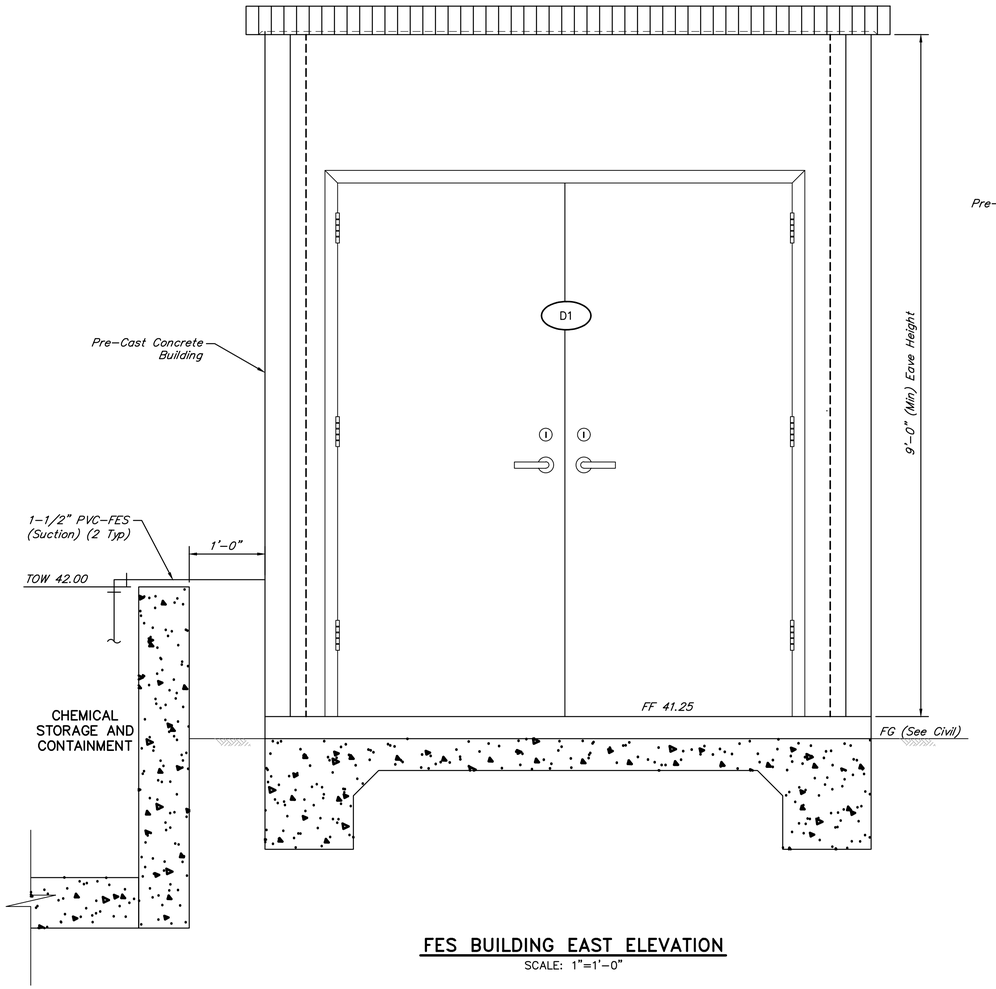

FES BUILDING EAST ELEVATION

SCALE: 1"=1'-0"

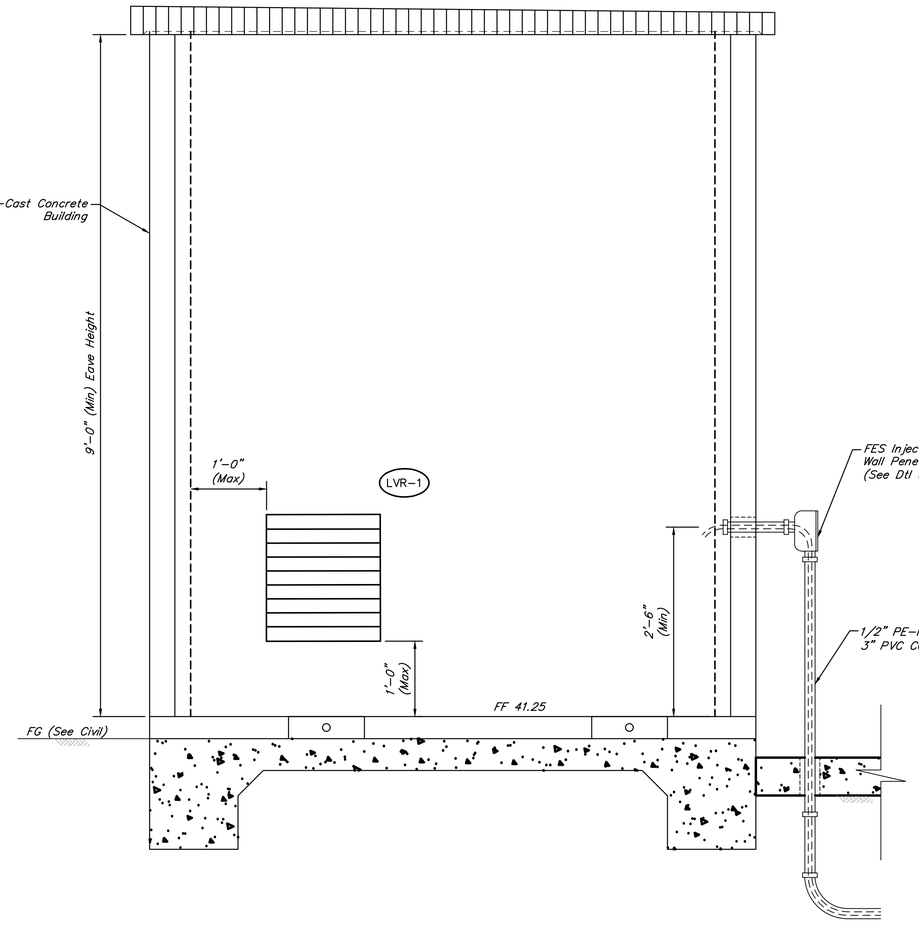

FES BUILDING NORTH ELEVATION

SCALE: 1"=1'-0"

NOTES:

1. Pipes with diameter less than 3" do not have all valves and fittings shown and are not labeled with valve and accessories schedule. Refer to P&ID.
2. Chemical piping running along the inside wall of the chemical containment pad shall be mounted with FRP unistrut & SS hardware. The maximum distance between supports shall be 4'-0".
3. Chemical piping running to and from the chemical tanks and not supported along the inside wall of the chemical containment pad shall be mounted with pipe hangers & SS hardware. The maximum distance between supports shall be 4'-0".

QUIDDITY
Texas Board of Professional Engineers and Land Surveyors Reg. No. F-23290
6330 West Loop South, Suite 150 • Bellaire, TX 77401 • 713.777.5337

JOB NO: 00050-0099-01 DATE: 1/19/2026

APPROVED BY:

DATE: MAY 2026

DESIGNED BY: CTHOMAS

DRAWN BY: CHUDSON

SURVEYED BY:

FB NO. XXXXXX

INTERIM REVIEW
Not intended for construction, bidding or permit purposes.
Engineer: HARRY W. ISENSEE III, P.E.
P.E. Serial No.: 144401
Date: MAY 2026

CITY OF HOUSTON
HOUSTON PUBLIC WORKS

SCOTT STREET NO. 1
LIFT STATION REHABILITATION
MECHANICAL
FES FEED BUILDING
PLAN AND SECTIONS
SHEEET 2 OF 2

WBS NUMBER	FOR CITY OF HOUSTON USE ONLY
R-000267-127A-4	
DRAWING SCALE	
AS NOTED	
CITY OF HOUSTON PM	
TAHA LOTIA	
DWG NO. 3-M-7	
SHEET NO. 95 OF 220	

K:\00050\00050-0099-01 Scott St. No. 1 Lift Station Rehabilitation - Phase II Design\2 Design Phase\CAD\MECH-2.dwg

0 1 2 3 4 5 ORIGINAL SCALE IN INCHES FOR REDUCED PLANS

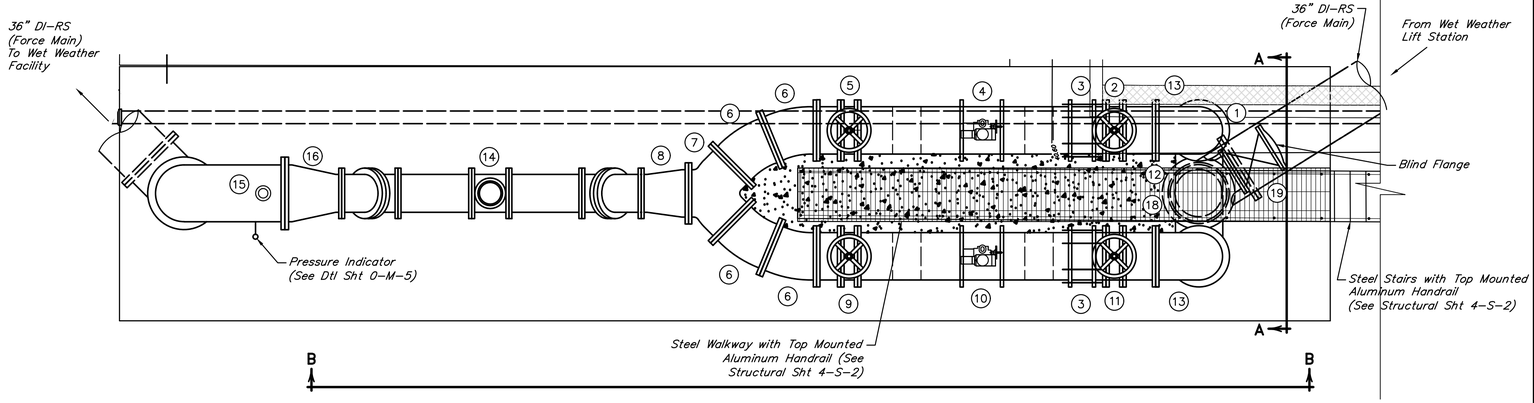

PLAN VIEW
SCALE: 1/4"=1'–0"

VALVE AND ACCESSORIES SCHEDULES

No.	DESCRIPTION
1	36" 90° Bend, MJ
2	30" Knife Gate Valve, FJ (KGV–02B–105)
3	30" Dismantling Joint, FJ
4	30" Actuated Flow Control Valve, FJ (PV–02B–001)
5	30" Knife Gate Valve, FJ (KGV–02B–105)
6	30" 22.5° Bend, FJ
7	30" Wye Connection, FJ
8	30" x 24" Reducer, FJ
9	30" Knife Gate Valve, FJ (KGV–02B–106)
10	30" Actuated Flow Control Valve, FJ (PV–02B–002)
11	30" Knife Gate Valve, FJ (KGV–02B–106)
12	30" Wye Connection, FJ
13	30" 90° Bend, FJ
14	24" Flow Meter
15	6" Combination Air Release Valve
16	24" x 36" Reducer, FJ
17	36" x 30" Reducer, FJ
18	30" x 30" x 24" Tee, FJ
19	24" Plug Valve, (PV–02B–003)
20	6" Plug Valve, (PV–02B–105)

◯ *Denotes the use of a restrained, push–on connection*

NO.	DATE	REVISIONS	APP.

0 1 2 4 8 12
SCALE: 1/4" = 1'

NOTES:

1. Contractor shall apply protective coating to all proposed above ground piping.
2. All proposed valves shall be installed with position indicator.
3. All pressure gauges and air release valves shall be stainless steel.
4. Contractor shall stencil directional arrows and process line identification on all pipes at no greater than 10–foot interval.
5. All aluminum grating, handrails, and access hatches shall receive shop applied powder coating. Aluminum grating and handrails shall be COH yellow and access hatches shall be COH forest green.
6. All stairs shall have non–slip steps.

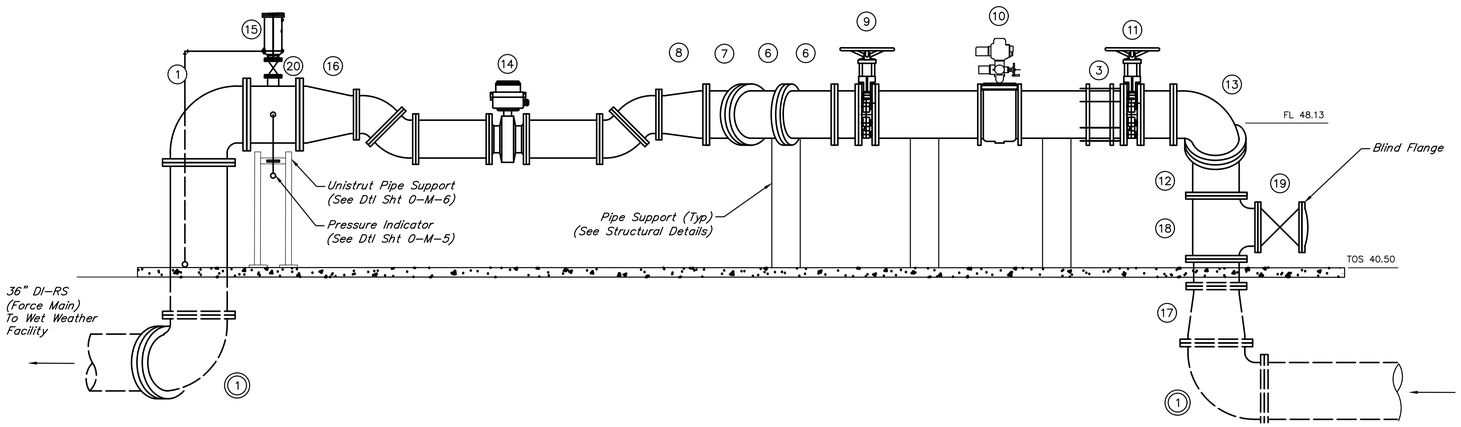

SECTION VIEW B–B
SCALE: 1/4"=1'–0"

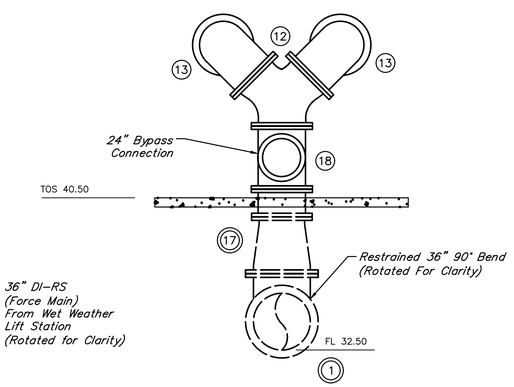

SECTION VIEW A–A
SCALE: 1/4"=1'–0"

QUIDDITY
Texas Board of Professional Engineers and Land Surveyors Reg. No. F-23290
6330 West Loop South, Suite 150 • Bellaire, TX 77401 • 713.777.5337

JOB NO: 00050–0099–01 DATE: 1/19/2026

APPROVED BY:
DATE: MAY 2026
DESIGNED BY: MBMITCHELL
DRAWN BY: JMMUSSO
SURVEYED BY:
FB NO. XXXXXX

INTERIM REVIEW
Not intended for construction, bidding or permit purposes.
Engineer: WILLIAM R. SAGASTIZADO, P.E.
P.E. Serial No.: 125999
Date: MAY 2026

CITY OF HOUSTON
HOUSTON PUBLIC WORKS

SCOTT STREET NO. 1
LIFT STATION REHABILITATION
MECHANICAL

WET WEATHER LIFT STATION
FLOW METER STATION

WBS NUMBER	FOR CITY OF HOUSTON USE ONLY
R–000267–127A–4	
DRAWING SCALE	
AS NOTED	
CITY OF HOUSTON PM	
TAHA LOTIA	
DWG NO. 4–M–1	
SHEET NO. 96 OF 220	

K:\00050\00050-0099-01 Scott St. No. 1 Lift Station Rehabilitation - Phase II Design\2 Design Phase\CAD\MECH-1.dwg

ORIGINAL SCALE IN INCHES FOR REDUCED PLANS

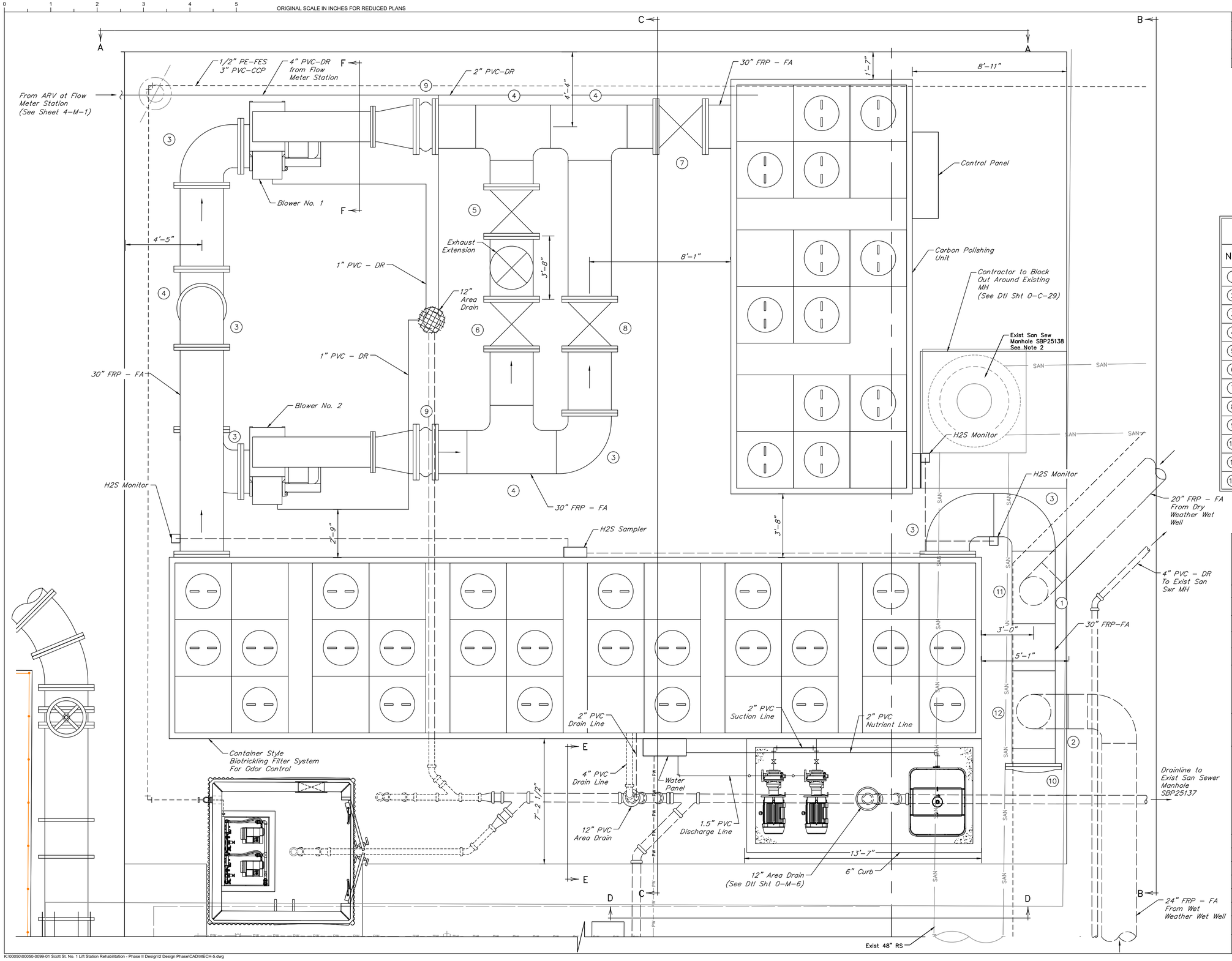

NO.	DATE	REVISIONS	APP.

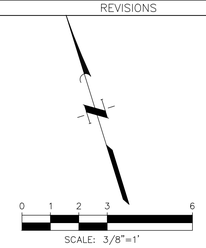

VALVE AND ACCESSORIES SCHEDULES

No.	DESCRIPTION
(1)	20" 90° Bend, FJ
(2)	24" 90° Bend, FJ
(3)	30" 90° Bend, FJ
(4)	30" TEE, FJ
(5)	30" Damper, FJ (DMP-04-101)
(6)	30" Damper, FJ (DMP-04-102)
(7)	30" Damper, FJ (DMP-04-103)
(8)	30" Damper, FJ (DMP-04-104)
(9)	Single Arch Expansion Joint
(10)	30" Blind Flange, FJ
(11)	20" x 30" Tee, FJ
(12)	24" x 30" Tee, FJ

NOTES:

1. See Sheet 5-M-2 for Notes.

QUIDDITY

Texas Board of Professional Engineers and Land Surveyors Reg. No. F-23290
6330 West Loop South, Suite 150 • Bellaire, TX 77401 • 713.777.5337

JOB NO: 00050-0099-01 DATE: 1/19/2026

APPROVED BY:

DATE: MAY 2026

DESIGNED BY: MBMITCHELL

DRAWN BY: JMMUSSO

SURVEYED BY:

FB NO. XXXXXX

INTERIM REVIEW
Not intended for construction, bidding or permit purposes.
Engineer: WILLIAM R. SAGASTIZADO, P.E.
P.E. Serial No.: 125999
Date: MAY 2026

CITY OF HOUSTON
HOUSTON PUBLIC WORKS

SCOTT STREET NO. 1 LIFT STATION REHABILITATION

MECHANICAL

ODOR CONTROL SYSTEM PROPOSED PLAN

WBS NUMBER	R-000267-127A-4
DRAWING SCALE	AS NOTED
CITY OF HOUSTON PM	TAHA LOTIA
DWG NO.	5-M-1
SHEET NO.	97 OF 220

FOR CITY OF HOUSTON USE ONLY

K:\00050\00050-0099-01 Scott St. No. 1 Lift Station Rehabilitation - Phase II Design\2 Design Phase\CAD\MECH-5.dwg

ORIGINAL SCALE IN INCHES FOR REDUCED PLANS

NO.	DATE	REVISIONS	APP.

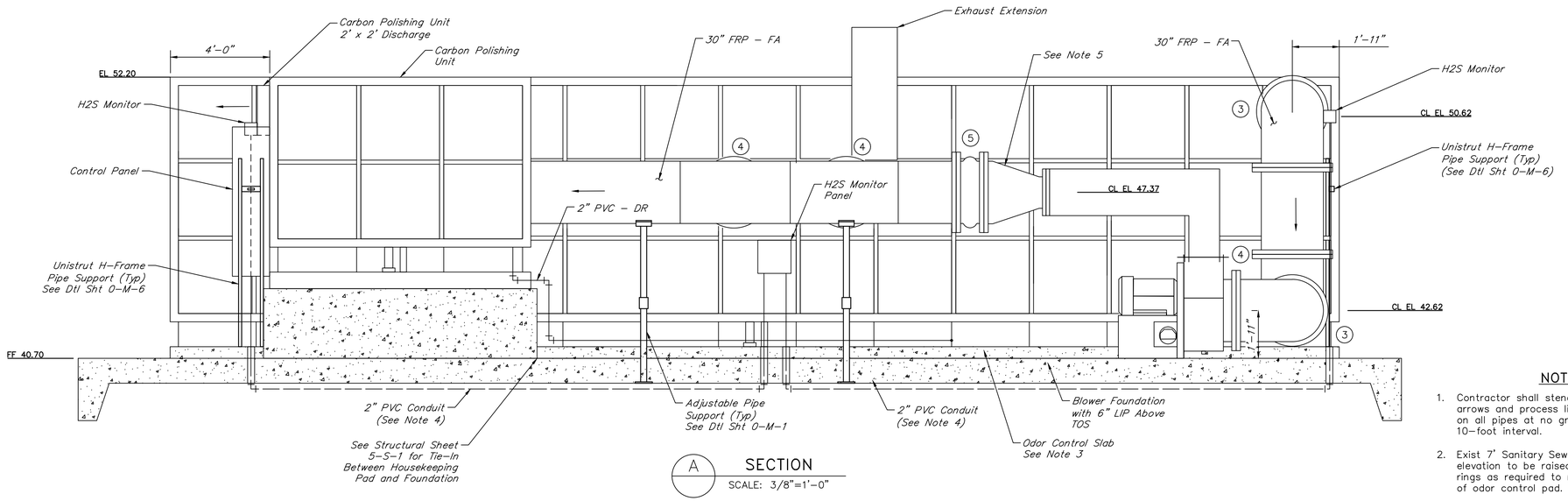

A SECTION
SCALE: 3/8"=1'-0"

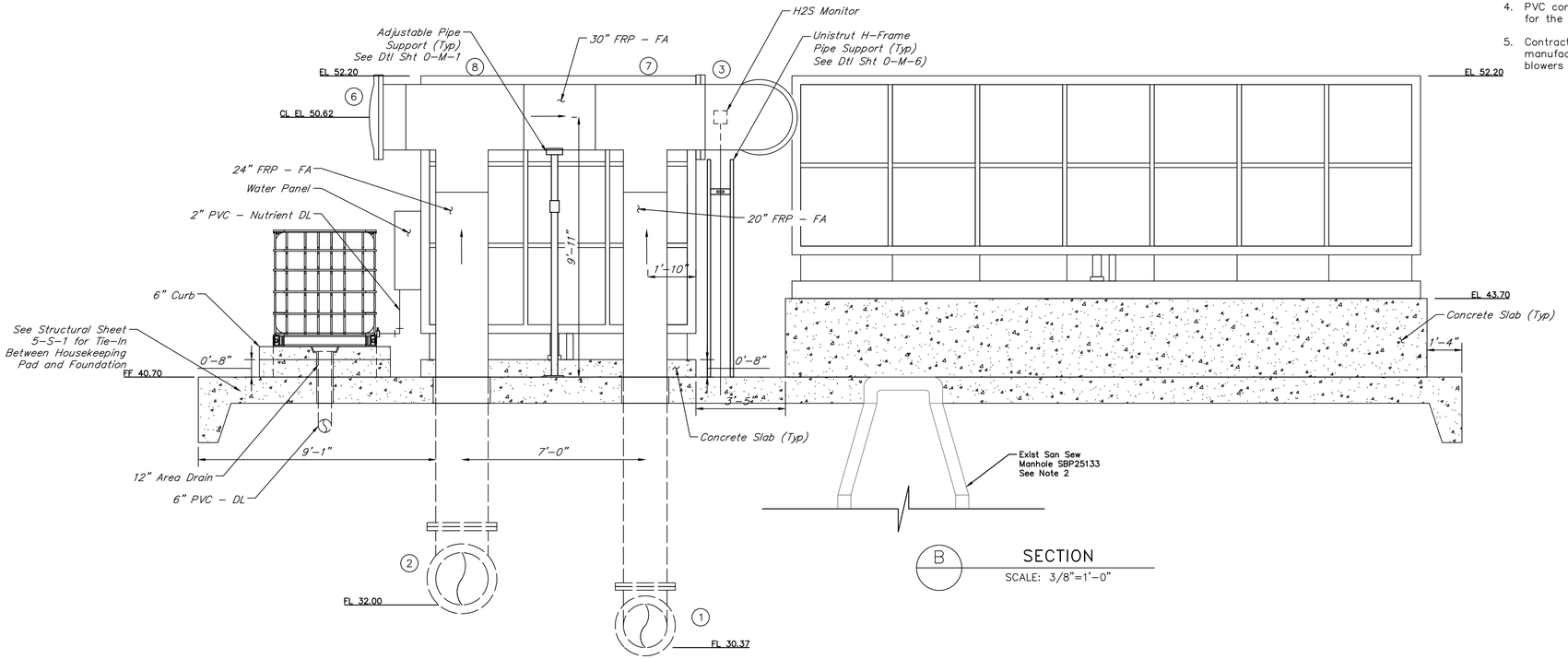

B SECTION
SCALE: 3/8"=1'-0"

0 1 2 3 6
SCALE: 3/8"=1'

VALVE AND ACCESSORIES SCHEDULES

No.	DESCRIPTION
1	20" 90° Bend, FJ
2	24" 90° Bend, FJ
3	30" 90° Bend, FJ
4	30" TEE, FJ
5	Single Arch Expansion Joint
6	30" Blind Flange, FJ
7	20" x 30" TEE, FJ
8	24" x 30" Tee, FJ

NOTES:

1. Contractor shall stencil directional arrows and process line identification on all pipes at no greater than 10-foot interval.
2. Exist 7' Sanitary Sewer MH rim elevation to be raised with adjustment rings as required to match FF elevation of odor control pad.
3. Contractor to provide yellow-stripe visual marker to differentiate odor control slab from finished floor.
4. PVC conduit shall be concrete encased for the entire span under the slab.
5. Contractor to coordinate with manufacturer for connections between blowers and proposed piping.

QUIDDITY
Texas Board of Professional Engineers and Land Surveyors Reg. No. F-23290
6330 West Loop South, Suite 150 • Bellaire, TX 77401 • 713.777.5337

JOB NO: 00050-0099-01 DATE: 1/19/2026

APPROVED BY:

DATE: MAY 2026

DESIGNED BY: MBMITCHELL

DRAWN BY: JMMUSSO

SURVEYED BY:

FB NO. XXXXXX

INTERIM REVIEW
Not intended for construction, bidding or permit purposes.
Engineer: WILLIAM R. SAGASTIZADO, P.E
P.E. Serial No.: 125999
Date: MAY 2026

CITY OF HOUSTON
HOUSTON PUBLIC WORKS

SCOTT STREET NO. 1 LIFT STATION REHABILITATION

MECHANICAL

ODOR CONTROL SYSTEM PROPOSED SECTION 1 OF 2

WBS NUMBER	FOR CITY OF HOUSTON USE ONLY
R-000267-127A-4	
DRAWING SCALE	
AS NOTED	
CITY OF HOUSTON PM	
TAHA LOTIA	
DWG NO. 5-M-2	
SHEET NO. 98 OF 220	

K:\00050\00050-0099-01 Scott St. No. 1 Lift Station Rehabilitation - Phase II Design\2 Design Phase\CAD\MECH-5.dwg

ORIGINAL SCALE IN INCHES FOR REDUCED PLANS

NO.	DATE	REVISIONS	APP.

SCALE: 3/8"=1'

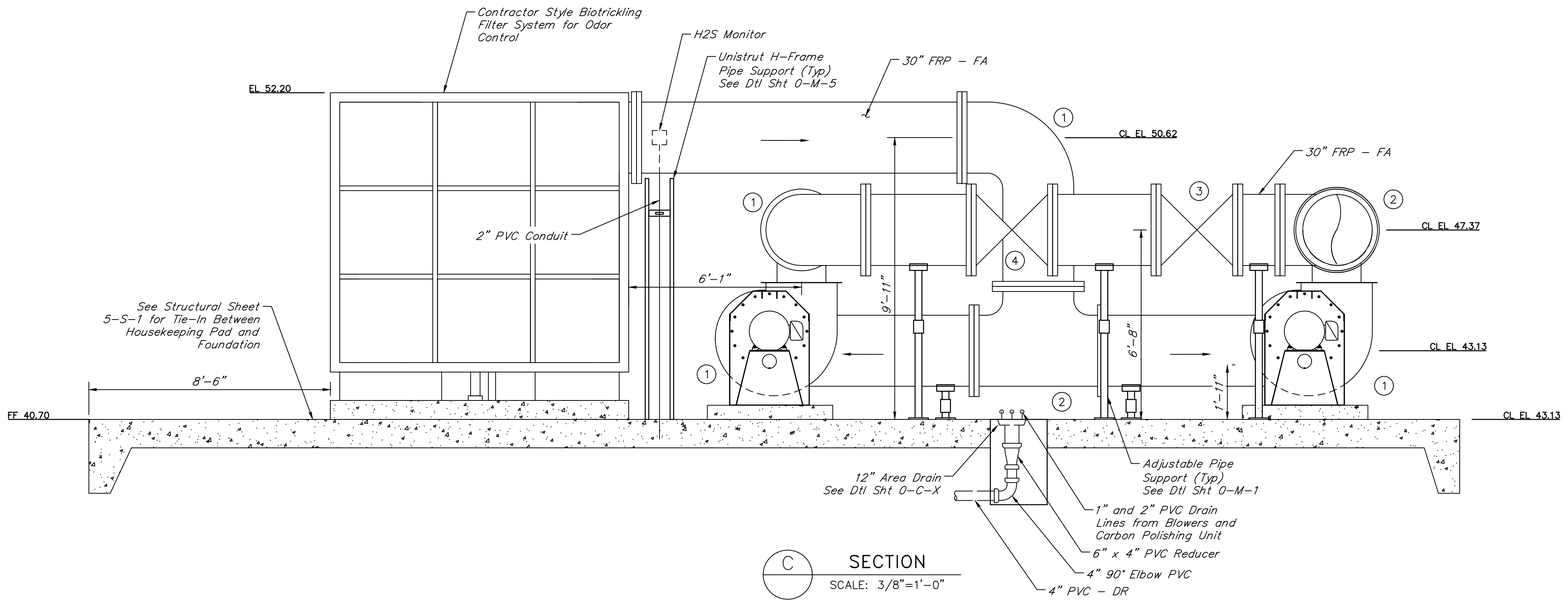

C SECTION
SCALE: 3/8"=1'-0"

VALVE AND ACCESSORIES SCHEDULES

No.	DESCRIPTION
1	30" 90° Bend, FJ
2	30" TEE, FJ
3	30" Damper, FJ (DMP-04-104)
4	24" x 30" Tee, FJ
5	24" 90° Bend, FJ

NOTES:

1. Contractor to stencil direction arrows and process line identification on all pipes at no greater than 10-foot interval.
2. Contractor to provide yellow-stripe visual marker to differentiate odor control slab from finished floor.

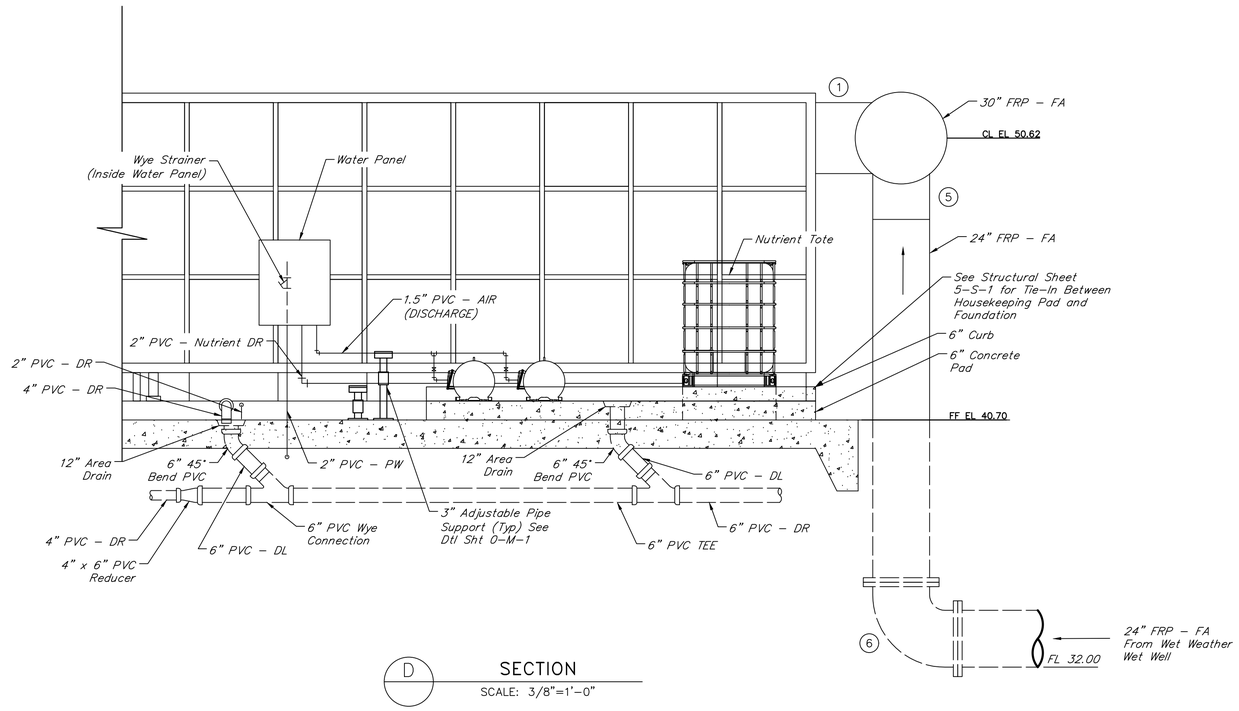

D SECTION
SCALE: 3/8"=1'-0"

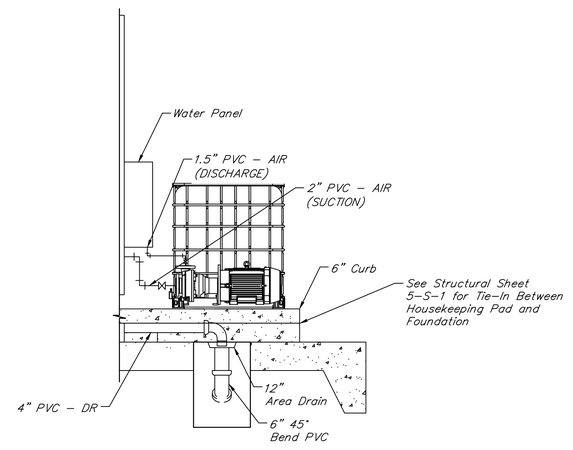

E SECTION
SCALE: 3/8"=1'-0"

QUIDDITY
Texas Board of Professional Engineers and Land Surveyors Reg. No. F-23290
6330 West Loop South, Suite 150 • Bellaire, TX 77401 • 713.777.5337

JOB NO: 00050-0099-01 DATE: 1/19/2026

APPROVED BY:

DATE: MAY 2026

DESIGNED BY: MBMITCHELL

DRAWN BY: JMMUSSO

SURVEYED BY:

FB NO. XXXXX

INTERIM REVIEW
Not intended for construction, bidding or permit purposes.
Engineer: WILLIAM R. SAGASTIZADO, P.E
P.E. Serial No.: 125999
Date: MAY 2026

CITY OF HOUSTON
HOUSTON PUBLIC WORKS

SCOTT STREET NO. 1 LIFT STATION REHABILITATION

MECHANICAL

ODOR CONTROL SYSTEM PROPOSED SECTION 2 OF 2

WBS NUMBER	FOR CITY OF HOUSTON USE ONLY
R-000267-127A-4	
DRAWING SCALE	
AS NOTED	
CITY OF HOUSTON PM	
TAHA LOTIA	
DWG NO. 5-M-3	
SHEET NO. 99 OF 220	

K:\00050\00050-0099-01 Scott St. No. 1 Lift Station Rehabilitation - Phase II Design\2 Design Phase\CAD\MECH-5.dwg

0 1 2 3 4 5 ORIGINAL SCALE IN INCHES FOR REDUCED PLANS

NO.	DATE	REVISIONS	APP.

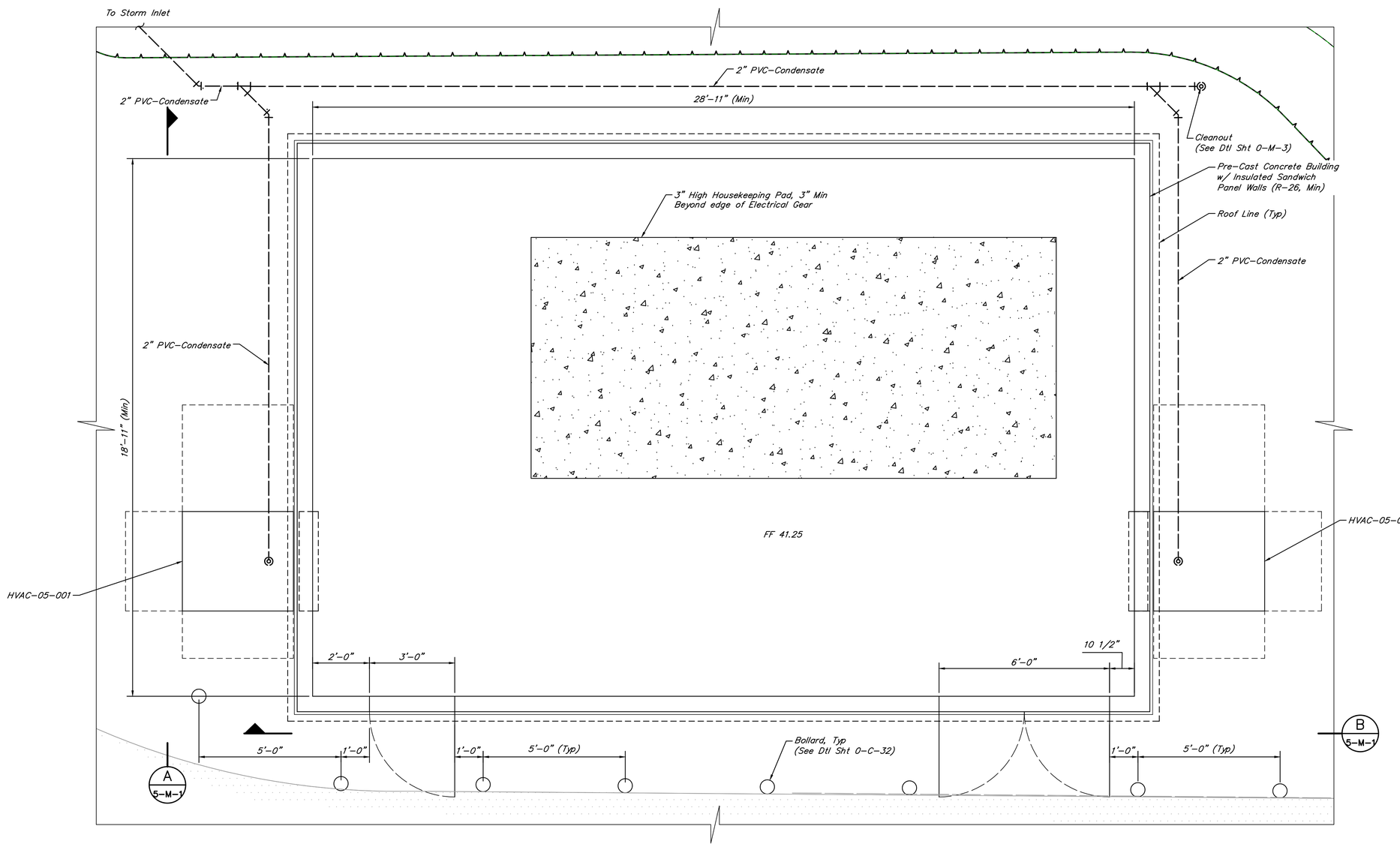

ELECTRICAL BUILDING No. 2 PLAN

SCALE: 1/2"=1'–0"

0 1 2 3 6

SCALE: 3/8"=1'

QUIDDITY

Texas Board of Professional Engineers and Land Surveyors Reg. No. F-23290
6330 West Loop South, Suite 150 • Bellaire, TX 77401 • 713.777.5337

JOB NO: 00050–0099–01 DATE: 1/19/2026

APPROVED BY:

DATE: MAY 2026

DESIGNED BY: MBMITCHELL

DRAWN BY: JMMUSSO

SURVEYED BY:

FB NO. XXXXXX

INTERIM REVIEW

Not intended for construction, bidding or permit purposes.

Engineer: HARRY W. ISENSEE III, P.E.

P.E. Serial No.: 144401

Date: MAY 2026

CITY OF HOUSTON

HOUSTON PUBLIC WORKS

SCOTT STREET NO. 1 LIFT STATION REHABILITATION

MECHANICAL

ELECTRICAL BUILDING No. 2 BUILDING PLAN

WBS NUMBER
R–000267–127A–4
DRAWING SCALE
AS NOTED
CITY OF HOUSTON PM
TAHA LOTIA
DWG NO. 6–M–1
SHEET NO. 100 OF 220

FOR CITY OF HOUSTON USE ONLY

K:\00050\00050-0099-01 Scott St. No. 1 Lift Station Rehabilitation - Phase II Design\2 Design Phase\CAD\MECH-5.dwg

ORIGINAL SCALE IN INCHES FOR REDUCED PLANS

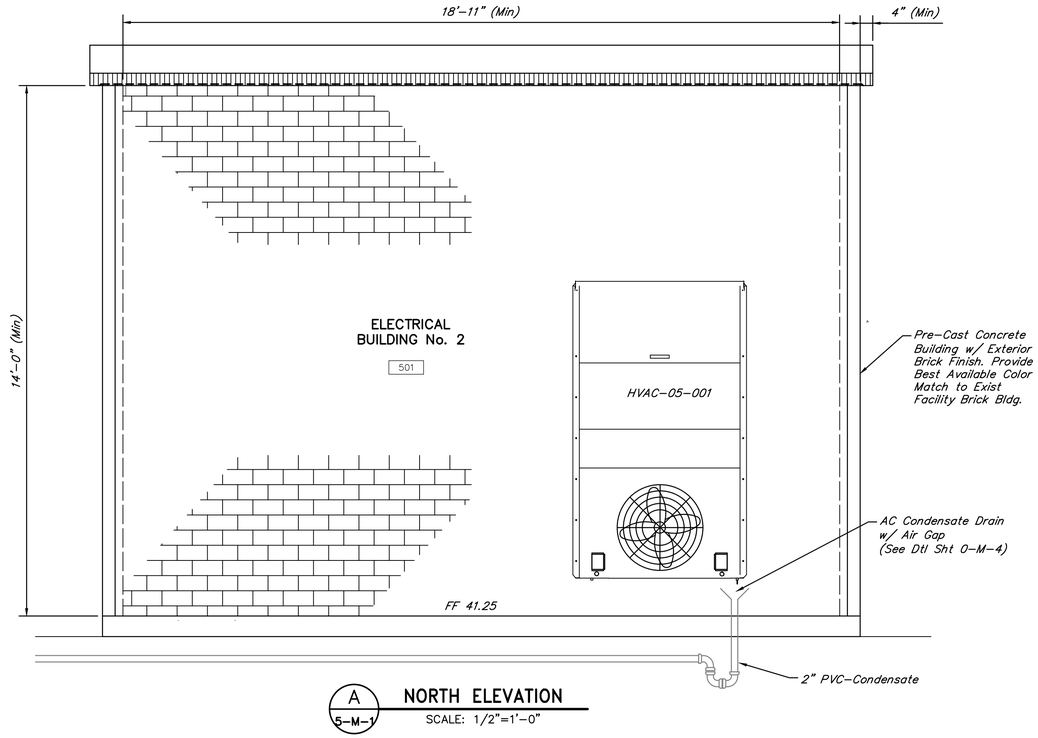

A 5-M-1 **NORTH ELEVATION**
SCALE: 1/2"=1'-0"

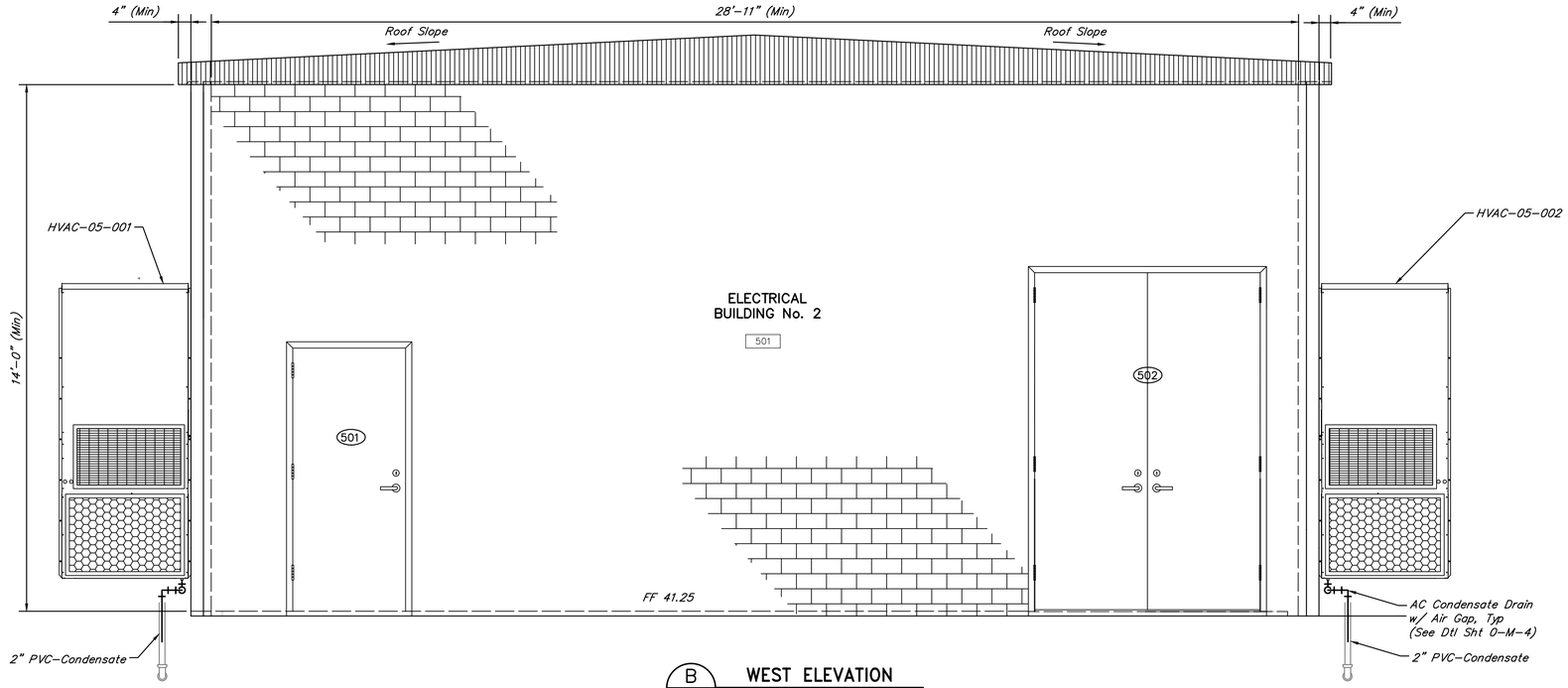

B 5-M-1 **WEST ELEVATION**
SCALE: 1/2"=1'-0"

DOOR SCHEDULE

I.D. No.	ROOM	DOOR DESCRIPTION						FRAME		REMARKS
		TYPE	WIDTH	HEIGHT	THICK	MAT'L	FINISH	MAT'L	FINISH	
501	Elec Bldg 2	SINGLE	3'-0"	7'-0"	1 3/4"	METAL	PAINT	METAL	PAINT	NOTES 1 – 8
502	Elec Bldg 2	DOUBLE	6'-0"	9'-0"	1 3/4"	METAL	PAINT	METAL	PAINT	NOTES 1 – 9

ROOM SCHEDULE

ROOM No.	ROOM NAME	CEILING HEIGHT	CEILING	FLOOR	BASE	MILLWORK	NORTH WALL	SOUTH WALL	EAST WALL	WEST WALL
501	ELEC BLDG No. 2	14'-0"	OPEN	SC-01	NONE	NONE	BF-01	BF-01	BF-01	BF-01

FINISH SCHEDULE

TAG	TYPE	COMPANY	NAME	MODEL	SIZE
SC-01	SEALED CONCRETE	W.R. MEADOWS	VOVOMP	------	------
BF-01	CONCRETE	SPECIFICATION 03430	SPECIFICATION 03430	SPECIFICATION 03430	SPECIFICATION 03430

DOOR NOTES:

1. Provide panic hardware (interior).
2. Provide pull handle (exterior).
3. Provide closer.
4. Provide weather strip.
5. Provide door sweep.
6. Provide threshold.
7. Provide drip cap.
8. Provide wind speed rating for 110 mph with 3-second gust.
9. Provide astragal.

NO.	DATE	REVISIONS	APP.

SCALE: 3/8"=1'

QUIDDITY
Texas Board of Professional Engineers and Land Surveyors Reg. No. F-23290
6330 West Loop South, Suite 150 • Bellaire, TX 77401 • 713.777.5337

JOB NO: 00050-0099-01 DATE: 1/19/2026

APPROVED BY:
DATE: MAY 2026
DESIGNED BY: MBMITCHELL
DRAWN BY: JMMUSSO
SURVEYED BY:
FB NO. XXXXX

INTERIM REVIEW
Not intended for construction, bidding or permit purposes.
Engineer: HARRY W. ISENSEE III, P.E.
P.E. Serial No.: 144401
Date: MAY 2026

CITY OF HOUSTON
HOUSTON PUBLIC WORKS

SCOTT STREET NO. 1
LIFT STATION REHABILITATION
MECHANICAL

ELECTRICAL BUILDING No. 2 BUILDING ELEVATIONS

WBS NUMBER
R-000267-127A-4
DRAWING SCALE
AS NOTED
CITY OF HOUSTON PM
TAHA LOTIA
DWG NO. 6-M-2
SHEET NO. 101 OF 220

FOR CITY OF HOUSTON USE ONLY

K:\00050\00050-0099-01 Scott St. No. 1 Lift Station Rehabilitation - Phase II Design\2 Design Phase\CAD\MECH-5.dwg

0 1 2 3 4 5 ORIGINAL SCALE IN INCHES FOR REDUCED PLANS

ABBREVIATIONS

IDENTIFIER	DESCRIPTION
AC	AIR CONDITIONING
ACCH	AIR - COOLED CHILLER
ACCU	AIR - COOLED CONDENSING UNIT
ACD	AIR - CLEANING DEVICE
ARU	AIR - ROTATION UNIT
AFF	ABOVE FINISHED FLOOR
AFG	ABOVE FINISHED GRADE
AHU	AIR HANDLING UNIT
BF	BIG FAN
BTU	BRITISH THERMAL UNITS
CFM	CUBIC FEET PER MINUTE
CV	CONSTANT VOLUME
DB	DRY BULB
ES	EXHAUST SILENCER
EAT	ENTERING AIR TEMPERATURE
EDB	ENTERING DRY BULB
EER	ENERGY EFFICIENCY RATIO
EWB	ENTERING WET BULB
EF	EXHAUST FAN
FAI	FRESH AIR INTAKE
FLA	FULL LOAD AMPS
GC	GENERAL CONTRACTOR
HP	HORSEPOWER
IPLV	INTEGRATED PART LOAD VALUES
IS	INTAKE SILENCER
LAT	LEAVING AIR TEMPERATURE
MBH	THOUSAND BTU PER HOUR
MFR	MANUFACTURER
MOD	MOTOR OPERATED DAMPER
NIC	NOT IN CONTRACT
OA	OUTSIDE AIR
R	RETURN GRILLE
RLA	RATED LOAD AMPS
SDD	DUCT-MOUNTED SMOKE DETECTOR
ESP	EXTERNAL STATIC PRESSURE
SEF	SHOP EXHAUST FAN
TEF	TOILET EXHAUST FAN
UH	UNIT HEATER
UNO	UNLESS NOTED OTHERWISE
VAV	VARIABLE AIR VOLUME
VD	VOLUME DAMPER
VIC	VIBRATION ISOLATION CONNECTION
VIF	VERIFY IN FIELD
WC	WATER COLUMN

HVAC DUCTWORK LEGEND

SINGLE LINE DUCTWORK	DESCRIPTION	DOUBLE LINE DUCTWORK
	ROUND ELBOW DOWN	
	ROUND ELBOW UP	
	OFFSET TO CHANGE ELEVATION (AT 30° WHEN POSSIBLE ARROW SLOPES DOWN, U.N.O.)	
	ROUND RADIUS ELBOW R = 1.5	
	90° STRAIGHT TEE	
	90° CONICAL TEE	
	45° LATERAL TAP	
	45° LATERAL CONICAL TEE	
	SIZE OR SHAPE TRANSITION	
	ROUND FLEXIBLE DUCT	
	RECTANGULAR ELBOW DOWN	
	RECTANGULAR ELBOW UP	
	OFFSET TO CHANGE ELEVATION (AT 30° WHEN POSSIBLE ARROW SLOPES DOWN, U.N.O.)	
	RECTANGULAR RADIUS ELBOW R = 1.5	
	RECTANGULAR ELBOW WITH TURNING VANES	
	SPLIT BRANCH TAKE-OFF WITH SQUARE ELBOW & SPLITTER DAMPER	
	SPLIT BRANCH TAKE-OFF WITH RADIUS ELBOW & SPLITTER DAMPER	
	SPLIT BRANCH TAKE-OFF WITH SQUARE ELBOW & SPLITTER DAMPER	
	BRANCH TAKE-OFF WITH 45° LEAD IN TAP	
	SQUARE FACED CEILING DIFFUSER 4-WAY DIRECTIONAL THROW (U.N.O.)	
	ROUND FACED CEILING DIFFUSER	
OR	CEILING RETURN OR EXHAUST AIR GRILLE OR REGISTER	
	SIDEWALL SUPPLY GRILLE OR REGISTER	
	SUPPLY DUCT RISER	
	RETURN, EXHAUST, OR OUTSIDE AIR DUCT RISER	
	INSULATED/LINED DUCTWORK (U.N.O.)	
	MANUAL BALANCING DAMPER	
M	AUTOMATIC (MOTOR-OPERATED) DAMPER	M
FD	FIRE DAMPER	FD
BD	GRAVITY BACKDRAFT DAMPER	BD
FDS	COMBINATION FIRE AND SMOKE DAMPER WITH SMOKE DETECTOR	FDS
SD	AUTOMATIC (MOTOR-OPERATED) DAMPER	SD
S	DUCT MOUNTED SMOKE DETECTOR	S OR

SYMBOLS

CFM,	CUBIC FEET PER MINUTE
T	THERMOSTAT
T	TEMPERATURE SENSOR
S	TEMPERATURE / HUMIDITY SENSOR
	SUPPLY AIR FLOW
	RETURN/EXHAUST AIR
U 1	UNDERCUT DOOR
SDD	DUCT SMOKE DETECTOR
	4 WAY CEILING DIFFUSER
	RETURN GRILLE
	EXHAUST GRILLE
	SUPPLY DUCT UP
	RETURN DUCT UP
	EXHAUST DUCT UP
	SUPPLY DUCT DOWN
	RETURN DUCT DOWN
	EXHAUST DUCT DOWN
	FLEXIBLE DUCT
FD	FIRE DAMPER
FSD	COMBINATION FIRE/ SMOKE DAMPER
SD	SMOKE DAMPER
MD	MOTORIZED DAMPER
XX / XXX	DIFFUSER TYPE / CFM
VAV-X-X	QUANTITY / FLOOR
CV-X-X	QUANTITY / FLOOR

GENERAL NOTES:

1. ALL DRAWINGS, SPECIFICATIONS, AND OTHER RELATED DOCUMENTS SHALL BE CONSIDERED A PART OF THIS CONTRACT AS FAR AS THEY APPLY TO THE WORK OF THIS CONTRACT, AS IF REFERRED TO IN FULL.
2. DUCTWORK AND PIPING LAYOUTS ARE SCHEMATIC DIAGRAMS AND ARE INTENDED TO SHOW GENERAL ARRANGEMENT, SIZE AND CAPACITY AND DO NOT INDICATE WHICH PIPE OR DUCT IS ABOVE OR BELOW THE OTHER. ALL OFFSETS ARE NOT NECESSARILY SHOWN, CONTRACTOR SHALL ARRANGE AND COORDINATE THE WORK, FURNISH NECESSARY OFFSETS, VALVES, VENTS AND FITTINGS TO AVOID CONFLICT WITH OTHER MECHANICAL AND ELECTRICAL SERVICES AND STRUCTURAL AND ARCHITECTURAL ELEMENTS WITHOUT ADDITIONAL COST TO THE OWNER. IF AREAS OF CONFLICT ARE ENCOUNTERED, THE ENGINEER SHALL BE NOTIFIED AND CONTRACTORS RECOMMENDATIONS SHALL BE SUBMITTED TO THE ENGINEER FOR APPROVAL BEFORE WORK HAS BEGUN.
3. SEE ARCHITECTURAL AND STRUCTURAL DRAWINGS FOR ADDITIONAL INFORMATION & DETAILS REGARDING ROOF CURBS AND WALL PENETRATIONS, INCLUDING INSULATING, FLASHING, COUNTERFLASHING & SEALING AND COORDINATE WITH THE ROOFING CONTRACTOR.
4. ALL WORK SHALL BE COORDINATED WITH ALL OTHER TRADES. THE COST OF ANY WORK AS A RESULT OF FAILURE TO COORDINATE WORK IS THE RESPONSIBILITY OF THE CONTRACTOR & SHALL BE PERFORMED AT NO COST TO THE OWNER.
5. ALL EQUIPMENT SHALL BE FURNISHED WITH SHOP DRAWINGS, INSTALLATION GUIDELINES, MAINTENANCE MANUALS, SCHEDULES, TAGS, AND LETTER OF GUARANTEE IN A BINDER (THREE-RING) WITH TABS. ALL EQUIPMENT SHALL BE INSTALLED IN CONFORMANCE WITH THESE DOCUMENTS & THE EQUIPMENT MANUFACTURER'S RECOMMENDATION.
6. THERE SHALL BE NO RIGID CONTACT BETWEEN CONDUIT, PIPES, CEILING WIRES, AND DUCTWORK.
7. PROPER FIRE PROTECTION MEASURES, SATISFACTORY TO THE LOCAL FIRE DEPARTMENT SHALL BE TAKEN WHEN WELDING OR CUTTING WITH TORCHES OR ELECTRIC ARC.
8. ALL REMOVED EQUIPMENT, MATERIALS AND DEBRIS SHALL BE LEGALLY DISPOSED OF OFF OF SITE BY THIS CONTRACTOR IN ACCORDANCE WITH ALL LOCAL, STATE AND FEDERAL CODES, RULES AND REGULATIONS.
9. THIS CONTRACTOR SHALL BE RESPONSIBLE FOR ALL CUTTING AND PATCHING OF ANY WALLS, ROOF, OR FLOOR DURING CONSTRUCTION REQUIRED BY HIS TRADE.
10. ALL FIELD CONDITIONS AND DIMENSIONS SHOWN ON THE DRAWINGS SHALL BE VERIFIED PRIOR TO SUBMITTING BIDS & PRIOR TO COMMENCEMENT OF WORK (INCLUDING UNIT ORIENTATION). NO ALLOWANCE WILL BE MADE FOR NOT COMPLYING WITH THIS REQUIREMENT.
11. THIS CONTRACTOR SHALL MAKE FINAL CONNECTIONS TO OWNER'S EQUIPMENT.
12. BALANCE AND CERTIFY ALL AIR SYSTEMS AS PER SPECIFICATIONS. REFER TO DRAWINGS FOR FLOW REQUIREMENTS.
13. HVAC CONTRACTOR SHALL CHANGE FILTERS IN ALL AIR HANDLING UNITS EVERY 3 MONTHS DURING COURSE OF CONSTRUCTION AND PRIOR TO DELIVERY OF SYSTEM TO OWNER.
14. UNLESS OTHERWISE NOTED ON THE DRAWINGS, ALL MECHANICAL EQUIPMENT SHALL BE MOUNTED ON VIBRATION ISOLATORS TO PREVENT THE TRANSMISSION OF SOUND TO THE BUILDING STRUCTURE. VIBRATION ISOLATORS SHALL BE IN ACCORDANCE WITH THE SPECIFICATIONS AND ON ACTUAL WEIGHT DISTRIBUTION OF THE EQUIPMENT FURNISHED. DEFLECTIONS SHALL BE AS NOTED ON THE EQUIPMENT SHOP DRAWING SUBMITTALS.
15. ALL MECHANICAL CONTROLS (THERMOSTATS, ETC.) SHALL BE FURNISHED AND INSTALLED AS PER BARRIER-FREE SUBCODE OF UNIFORM CONSTRUCTION CODE. THERMOSTAT FOR EACH ZONE SHALL BE CAPABLE OF AUTOMATICALLY SETTING BACK OR SHUTTING DOWN HEATING AND COOLING SYSTEM DURING NIGHT AND WEEKENDS, AND HAVE AN ACCESSIBLE OVERRIDE TO TURN SYSTEM ON/OFF DURING OFF-HOURS.
16. THERMOSTAT WIRING SHALL BE RUN IN CONCEALED SPACE, WALL OR CHASE OR INSTALLED IN SURFACE MOUNTED CONDUITS (IN ELECTRICAL ROOM).
17. COORDINATE EXACT LOCATION AND MOUNTING HEIGHT OF ALL THERMOSTATS WITH ENGINEER/OWNER PRIOR TO INSTALLATION.
18. DUCT MOUNTED SMOKE DETECTORS SHALL BE PROVIDED IN ALL AIR HANDLING UNITS SUPPLYING AIR QUANTITIES GREATER THAN OR EQUAL TO 2000 CFM.

AIRSIDE:

A. ALL AIR MOVING DEVICES, INCLUDING BUT NOT LIMITED TO, AIR HANDLING UNITS, AIR CONDITIONING UNITS, AND UNIT VENTILATORS MUST COMPLY WITH AMCA STANDARD 210 AND ASHRAE STANDARD 62.1-2025.

B. PROVIDE VIBRATION ISOLATION ON ALL DUCT CONNECTIONS TO FANS AND OTHER EQUIPMENT WITH ROTARY PARTS.

C. DUCTWORK SHALL BE IN ACCORDANCE WITH SMACNA LOW AND MEDIUM PRESSURE "HVAC DUCT CONSTRUCTION STANDARDS - METAL AND FLEXIBLE".

D. DUCT SIZES SHOWN ARE CLEAR INSIDE DIMENSIONS. INTERNALLY LINED DUCTS SHALL BE INCREASED IN SIZE TO MAINTAIN THE SAME INTERNAL SIZE.

E. PROVIDE 1" THICK ACOUSTICAL LINING IN THE SUPPLY AND RETURN DUCT OF ALL AIR HANDLING UNITS UP TO 20 FEET FROM THE FAN DISCHARGE.

F. ALL RECTANGULAR DUCTWORK WITHIN 20' OF AIR HANDLING UNITS AND ALL FANS SHALL BE FABRICATED FROM SHEET METAL 2 GAUGES THICKER THAN SMACNA STANDARD GAUGES. MAXIMUM DUCT SECTION LENGTH WITHIN 20' OF EQUIPMENT SHALL BE 4'-0".

G. PROVIDE 1/4"X1/4" WOVEN WIRE MESH ON OPEN END RETURN AIR AND EXHAUST AIR DUCTS.

H. PROVIDE DOUBLE THICKNESS TURNING VANES IN ALL SQUARE ELBOWS.

I. PROVIDE VOLUME DAMPER ON EACH BRANCH TAKE OFF FROM DUCT MAIN, AND ON EACH DIFFUSER TAKE OFF FROM BRANCH DUCT OR MAIN.

J. FLEXIBLE DUCT CONNECTIONS TO REGISTERS, DIFFUSERS, ETC. SHALL NOT EXCEED 6'-0" IN LENGTH.

K. COORDINATE ALL SUPPLY AIR OUTLETS, EXHAUST GRILLES, AND RETURN AIR GRILLES WITH ARCHITECTURAL REFLECTED CEILING PLANS AND WITH ELECTRICAL LIGHT FIXTURES AND EQUIPMENT LOCATED WITHIN 24" OF DUCTWORK.

L. BORDER TYPE, COLOR, FINISHES AND METHOD OF ATTACHMENT FOR ALL DIFFUSERS, GRILLS AND REGISTERS SHALL BE COORDINATED WITH THE ARCHITECTURAL CEILING DETAIL AND SPECIFICATIONS.

M. PROVIDE AND INSTALL FIRE DAMPERS AND ACCESS DOORS IN ALL DUCTWORK PENETRATING FIRE RATED WALLS. ALL ACCESS DOORS SHALL BE 12"X 12" UNLESS OTHERWISE NOTED.

N. ALL FIRE DAMPERS SHALL BE TYPE A WITH BLADES LOCATED OUT OF THE AIR STREAM.

O. ALL TRANSVERSE JOINTS SHALL BE SEALED WITH TAPE AND MASTIC. LONGITUDINAL SEAMS ON MEDIUM PRESSURE DUCT WORK SHALL BE SEALED WITH TAPE & MASTIC.

P. TEMPERATURE CONTROLS EXCEPT AS SPECIFIED HEREIN SHALL BE FURNISHED AND INSTALLED BY HVAC CONTRACTOR.

Q. ALL HVAC EQUIPMENT SHALL BE UL LISTED.

R. DUCT INSULATION SHALL MEET MIN. R VALUES:
A. DUCT IN UNCONDITIONED SPACE SHALL BE R-6 INSTALLED.
B. DUCT INSTALLED OUTSIDE BUILDING SHALL BE R-8.

S. TRANSVERSE JOINTS ON METAL DUCT SHALL BE SEALED. ALL OTHER DUCTS SHALL BE MECHANICALLY FASTENED AND SEALED. NO DUCT TAPE CAN BE USED AS PRIMARY SEALANT.

NO.	DATE	REVISIONS	APP.

BENCH MARK
A BRASS DISC STAMPED "RM 070215" LOCATED AT THE END OF YAUPON HOLLY LANE AT ITS INTERSECTION WITH EASTERN REDBUD LANE, ON TOP OF A "B-B" INLET AT THE NORTHWEST CORNER OF THE INTERSECTION.
ELEVATION = 64.76 FEET NAVD 88 (2001 ADJUSTMENT)

T.B.M. "A"
A CHISELED SQUARE ON THE BULL NOSE OF THE ESPLANADE LOCATED ON WEST LAKE HOUSTON PARKWAY APPROXIMATELY 970 FEET NORTH OF THE CENTERLINE INTERSECTION OF SUMMER LAKE RANCH DRIVE AND WEST LAKE HOUSTON PARKWAY.
ELEVATION = 55.34 FEET NAVD 88 (2001 ADJUSTMENT)

T.B.M. "B"
A CHISELED SQUARE ON TOP OF A "B-B" INLET AT THE SOUTHWEST CORNER OF THE INTERSECTION OF SUMMER LAKE RANCH DRIVE AND WEST LAKE HOUSTON PARKWAY.
ELEVATION = 53.67 FEET NAVD 88 (2001 ADJUSTMENT)

100-YEAR FLOOD PLAIN
ACCORDING TO MAP No. 48201C0510L OF THE FEDERAL EMERGENCY MANAGEMENT AGENCY'S (FEMA) FLOOD INSURANCE RATE MAP (FIRM) FOR HARRIS COUNTY, TEXAS AND INCORPORATED AREAS, DATED JUNE 18, 2007, THE SUBJECT TRACT IS SITUATED WITHIN UNSHADED ZONE "X"; DEFINED AS AREAS DETERMINED TO BE OUTSIDE THE 0.2% ANNUAL CHANCE FLOODPLAIN (500-YEAR FLOOD).

NOTICE:
FOR YOUR SAFETY, YOU ARE REQUIRED BY TEXAS LAW TO CALL 811 AT LEAST 48 HOURS BEFORE YOU DIG SO THAT UNDERGROUND LINES CAN BE MARKED. THIS SIGNATURE DOES NOT FULFILL YOUR OBLIGATION TO CALL 811

VERIFICATION OF PRIVATE UTILITY LINES

Date:
CenterPoint Energy natural gas utilities shown.
(Gas services lines are not shown). This signature not to be used for conflict verification.
Signature Valid for six months.

Date:
CenterPoint Energy / UNDERGROUND Electrical Facilities Verification ONLY.
(This Signature verifies existing underground facilities - not to be used for conflict verification.)
Signature Valid for six months.

Date:
Approved for AT&T Texas / SWBT underground conduit facilities only.
Signature valid for one year.

QUIDDITY
Texas Board of Professional Engineers and Land Surveyors Reg. No. F-23290
6330 West Loop South, Suite 150 • Bellaire, TX 77401 • 713.777.5337

JOB NO: 00050-0099-01 DATE: 1/19/2026

APPROVED BY:
DATE: JUNE 2026
DESIGNED BY: MBMITCHELL
DRAWN BY: JMMUSSO
SURVEYED BY:
FB NO. XXXXXX

INTERIM REVIEW
Not intended for construction, bidding or permit purposes.
Engineer: HARRY W. ISENSEE III, P.E.
P.E. Serial No.: 144401
Date: JUNE 2026

CITY OF HOUSTON
HOUSTON PUBLIC WORKS

SCOTT STREET NO. 1
LIFT STATION REHABILITATION
BUILDING
BUILDING MECHANICAL SYMBOLS, ABBREVIATIONS & NOTES

WBS NUMBER	FOR CITY OF HOUSTON USE ONLY
R-000267-127A-4	
DRAWING SCALE	
AS NOTED	
CITY OF HOUSTON PM	
TAHA LOTIA	
DWG NO. 0-B-1	
SHEET NO. 102 OF 220	

K:\00050\00050-0099-01 Scott St. No. 1 Lift Station Rehabilitation - Phase II Design\2 Design Phase\CAD\0-B-1.dwg

0 1 2 3 4 5 ORIGINAL SCALE IN INCHES FOR REDUCED PLANS

MECHANICAL HVAC EQUIPMENT SCHEDULE

UNIT ID	NOMINAL TONS	SERVES	MANUFACTURER	MODEL NO.	POWER VOLTS / PH	MCA AMPS	MOCP AMPS	TOTAL CFM	CYCLE	TOTAL CAPACITY BTUH	SENSIBLE CAPACITY BTUH	EER	AMBIENT DB/WB ° F	ENTERING DB/WB ° F	HEATER KW	WEIGHT LBS	REMARKS
AC-1	5.0	Electrical Room	BARD	W60AF-C09XXXX5J	460/3	18	20	1860	COOLING	57,300	43,010	11.00	96/77	80/67	-	560	NOTES 1 THRU 6
									HEATING		-	-	47/43	80/67	9 KW		
AC-2	5.0	Electrical Room	BARD	W60AF-C09XXXX5J	460/3	18	20	1860	COOLING	57,300	43,010	11.00	96/77	80/67	-	560	NOTES 1 THRU 6
									HEATING		-	-	47/43	80/67	9 KW		

NOTES:
1. PROVIDE 7-DAY PROGRAMMABLE THERMOSTAT FOR AC UNITS CONTROL WITH LOCKABLE COVER, AUTO CHANGE-OVER; HONEYWELL OR EQUAL.
2. PACKAGE WALL MOUNTED UNIT SHALL INCLUDE TECHNICOAT AA COATINGS ON ALL INTERIOR & EXTERIOR COMPONENTS INCLUDING COILS TO PROTECT AGAINST CORROSIVE CHEMICALS IN THE AIRSTREAM.
3. PROVIDE BAROMETRIC FRESH AIR DAMPER, HIGH PRESSURE SWITCH, LOW PRESSURE SWITCH, COMPRESSOR CONTROL MODULE, LOW AMBIENT CONTROL, & ALARM RELAY.
4. PROVIDE SUPPLY GRILLE SG/W SERIES BRUSHED ANODIZED ALUMINUM & RETURN AIR GRILLE RG/W SERIES BRUSHED ANODIZED ALUMINUM.
5. INCLUDE ELECTRIC HEAT KIT FACTORY INSTALLED INTEGRAL TO VERTICAL PACKAGE UNIT.
6. ACCEPTABLE MANUFACTURERS INCLUDE BARD & EUBANK.

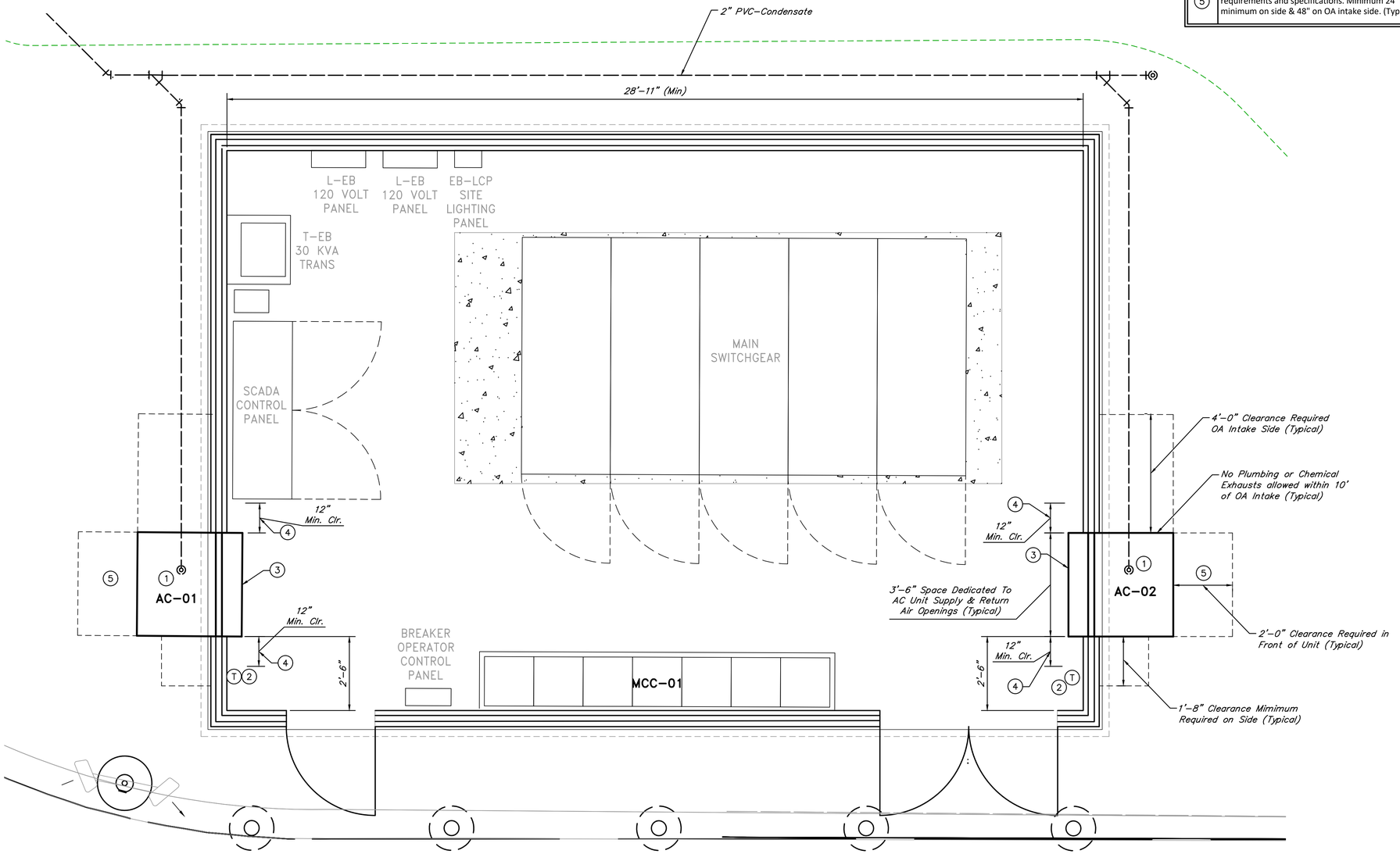

ELECTRICAL BUILDING No. 2 HVAC PLAN
SCALE: 1/2"=1'–0"

KEYED NOTES

No.	DESCRIPTION
1	Wall Mounted Vertical Packaged Air Conditioning Unit (AC). See Mechanical Schedule.
2	Thermostat. 7-Day Programmable for AC system control. Field verify location with Owner Rep prior to install.
3	Return Air Grille. Bard Model RG-SW, or approved equal, sized to fit unit.
4	Provide 12" Minimum clearance at each side of HVAC for SA & RA openings.
5	Provide exterior maintenance clearances per manufacturer's requirements and specifications. Minimum 24" in front, 20" minimum on side & 48" on OA intake side. (Typical each AC unit).

NO.	DATE	REVISIONS	APP.

0 .5 1 2 4 6
SCALE: 1/2" = 1'

HVAC GENERAL NOTES:

1. All work shall conform to the Owner's criteria, the State's, County's, City's, and other Authority Having Jurisdiction's local codes and ordinances, safety and health codes, NFPA codes, energy codes, and all other applicable codes and requirements. This Contractor shall inquire into and comply with all applicable codes and regulations. This Contractor shall include any changes required by codes in the Bid and if these changes are not included in the Bid, they must be qualified as a separate line item in the Bid. After contract is awarded, change orders for increased costs due to code issues will not be accepted unless allowances have previously been agreed upon.
2. All Mechanical (HVAC) equipment shall have condensate drain lines installed per local codes. Mechanical Contractor shall coordinate with Plumbing Contractor as required.

QUIDDITY
Texas Board of Professional Engineers and Land Surveyors Reg. No. F-23290
6330 West Loop South, Suite 150 • Bellaire, TX 77401 • 713.777.5337

JOB NO: 00050–0099–01 DATE: 1/19/2026

APPROVED BY:
DATE: JUNE 2026
DESIGNED BY: HESCALANTE
DRAWN BY: JMMUSSO
SURVEYED BY:
FB NO. XXXXXX

INTERIM REVIEW
Not intended for construction, bidding or permit purposes.
Engineer: H. ESCALANTE, JR., P.E.
P.E. Serial No.: 54444
Date: JUNE 2026

CITY OF HOUSTON
HOUSTON PUBLIC WORKS

SCOTT STREET NO. 1
LIFT STATION REHABILITATION
BUILDING

ELECTRICAL BUILDING No. 2
HVAC PLAN

WBS NUMBER	FOR CITY OF HOUSTON USE ONLY
R–000267–127A–4	
DRAWING SCALE	
AS NOTED	
CITY OF HOUSTON PM	
TAHA LOTIA	
DWG NO. 6–B–1	
SHEET NO. 103 OF 220	

K:\00050\00050-0099-01 Scott St. No. 1 Lift Station Rehabilitation - Phase II Design\2 Design Phase\CAD\MECH-5.dwg

0 1 2 3 4 5 ORIGINAL SCALE IN INCHES FOR REDUCED PLANS

STRUCTURAL NOTES:

I. GENERAL

A. All concrete work shall be performed in accordance with ACI 301 specifications, including but not limited to formwork installation, reinforcement placement, concrete mixing, delivery, placement, consolidation, finishing, curing, and protection, ensuring compliance with required strength, durability, and surface quality standards.

B. Design shall conform to the latest IBC Building Code requirements and latest ACI–318 code for concrete structures.

C. All structural plan dimensions are interpreted from and shall be verified with the civil drawings. The engineer shall be notified if discrepancies exist.

D. Structural drawings to be coordinated with civil, electrical, grading, mechanical drawings for all openings, inserts, elevation, and related items.

E. All structural openings dimensions and locations shall be verified with the mechanical drawings. The engineer shall be notified if discrepancies exist.

F. Any unusual conditions encountered shall be brought to the attention of the engineer prior to concrete placement.

G. Locations of construction joints not shown shall be approved by the engineer prior to concrete placement.

H. The contractor shall adhere to the trench and excavation safety requirements set forth in the occupational safety and health administration (OSHA) Standards 29 CFR, Part 1926, Subpart P, excavations.

II. CONCRETE

A. All concrete shall have a minimum compressive strength of 4000 PSI at 28 Days in accordance with ASTM C–39 at 28 days in accordance with ASTM C–78. An air entrainment agent shall be used. fly ash shall not be used.

B. Where concrete is placed against forms or seal slabs, reinforcing bars shall have a minimum of 2 inches clear cover unless shown otherwise. Where concrete is placed against earth, or in contact with liquid, reinforcing bars shall have a minimum of 3 inches clear cover.

C. Metal keyed construction joints and sawed joints may not be used. All joints below the highest water line shall have an approved waterstop.

D. Apply float finish to slab surfaces to receive a trowel finish.

E. All construction joints shall be thoroughly cleaned before fresh concrete is placed. Construction joints shall be roughened to a ¼" amplitude.

F. Except where floor drains occur, depressions between high spots shall not be greater than 1/8 in. Below a 10 ft. long straightedge in accordance with ACI 302.

G. Concrete faces shall not deviate more than 3/16" from the plan dimensions.

H. All exposed edges of beams, columns, slabs and walls shall be chamfered ¾" unless masonry or other members are erected flush with them.

J. Unless noted, anchor bolts and expansion bolts shall be stainless steel. All steel embedded items to be hot–dip galvanized.

III. REINFORCING STEEL

A. All reinforcing bars shall conform to ASTM A–615, grade 60. Arrangement and details of reinforcing steel, including bar supports and spacers, shall be in accordance with the latest ACI detailing manual, unless otherwise noted.

B. Detailing of reinforcing shall be in accordance with ACI 315, latest edition, unless shown otherwise. Placing of reinforcing shall be in accordance with C.R.S.I., "Recommended practice for placing of reinforcing bars", latest edition.

C. Where it is necessary to splice reinforcement at locations other than those shown on the drawings, the splice locations shall be approved by the engineer. Lap splices and embedment lengths, not shown on the drawings, shall be in accordance with C.R.S.I., Latest edition.

D. Support for the reinforcement shall be by metal high chairs either galv. or plastic dipped and spaced not more than six feet center to center.

E. All slab and beam reinforcement shall have a minimum extension into the support in accordance with the latest ACI code. If such extension is not possible, bars shall terminate in standard hooks.

IV. FOUNDATIONS

A. The mats should be poured the same day that they are excavated to minimize drying of the bearing soils. However, a lean concrete slab can be placed to protect the bearing area if the mats are left open overnight.

B. Site grading, fill material properties, excavation, subgrade preparation soil improvement, and allowable bearing pressure, shall follow geotechnical report.

C. A layer of non–woven geotextile fabric shall separate each layer of subsequent fill material per geotechnical report.

V. STRUCTURAL STEEL:

A. Structural steel shall conform to the latest AISC "Specification for the design,fabrication and erection of structural steel for buildings".

B. Structural steel materials shall comply with the following specifications:
Angles. Plates. Bars. Channels ASTM A36 U.N.O.

C. Field connections shall be bolted, except as otherwise shown or noted.

D. All welding shall conform to the latest specification of the American Welding Society. All welded connections shall be made with AWS A5.1 or A5.5 E70 XX electrode.

E. Anchor bolts and misc embedded steel ------ ASTM A36. Anchor bolts which are submerged, located above a liquid surface, or are in a corrosive atmosphere ------- 361 SS.

F. All equipment anchor bolt dimensions and locations shall be verified from certified vendor drawings, prior to construction.

G. All embedded items and steel structures exposed to weather to be hot–dip galvanized.

DESIGN CRITERIA:

A. Dead load materials assumed in the design are shown on the mechanical and structural drawings.

B. Design code is IBC 2021

C. Live Loads:

Location	Uniform Load	Concentrated Load
Operation Area		
Stairs and Exits	100 PSF Reducible	300 Lbs
Handrails and Guardrails	50 PSF or 200 Lbs applied at top rail in any direction. 50 Lbs in any direction applied at intermediate rails.	
Grab Bars		250 Lbs any Direction

D. Wind Loads:

Basic Wind Speed	137 MPH (3–Sec Gust)
Risk Category	III
Exposure Category	C
Internal Pressure Coeff	+/– 0.18
Components & Cladding	Not Applicable

E. Seismic Load:

Seismic Importance Factor	1.25
Spectral Responce Acceleration (Ss / S1)	0.082 / 0.044
Site Class	D
Spectral Responce Coeff. (Sds / Sd1)	0.072 / 0.066
Seismic Design Category	A

F. Handrails, guardrails and grab bars (including attachment to structure) shall be designed by the fabricator for the loads indicated in the referenced building code. Shop drawings shall be sealed by a professional engineer in the state of Texas, representing the fabricator. All handrails are to be aluminum tube sch 10, with cast aluminum Slip–Joint Type fillings by J.C. Denier Co., Inc. A 4"x¼" aluminum plate with mill finish shall be used as kick plate.

G. Stairs shall be designed by the steel fabricator for code required loads. Shop drawings shall be sealed by a professional engineer in the state of Texas, representing the fabricator.

TENSION DEVELOPMENT LENGTHS AND TENSION LAP SPLICE LENGTHS GRADE 60 (UNCOATED) REINFORCEMENT

BAR SIZE	NORMAL WEIGHT					
	F'c = 3000		F'c = 4000		F'c = 5000	
	CLASS A 1.0Ld	CLASS B 1.3Ld	CLASS A 1.0Ld	CLASS B 1.3Ld	CLASS A 1.0Ld	CLASS B 1.3Ld
#3	17	22	15	19	13	17
#4	22	29	19	25	17	23
#5	28	36	24	31	22	28
#6	33	43	29	37	26	34
#7	48	63	42	54	38	49
#8	55	72	48	62	43	56
#9	62	81	54	70	48	63
#10	70	91	61	79	54	71
#11	78	101	67	87	60	78

Notes:
1. *All lengths shown in the table are in inches.*
2. *Ld = Tension development length.*
3. *The table to the left is valid for*
   a. *Beams and columns where concrete cover > = db, c/c bar spacing > = 2db, and with stirrups or ties throughout Ld are not less than the code minimum.*
   b. *Other elements such as slabs, walls, etc. where concrete cover > = db, c/c bar spacing > = 3db.*
4. *For top bars, multiply the splice lengths by 1.30. Top bars require a minimum of 12" of fresh concrete below bar.*
5. *When bars of a different size are lap spliced in tension, splice length shall be the larger of Ld of the larger bar and compression lap splice length of smaller bar.*
6. *Bars spliced by non–contact lap spliced shall not be spaced transversely farther apart than the smaller of one–fifth the required lap splice length and 6".*

DEVELOPMENT LENGTHS OF STANDARD HOOKS IN TENSION GRADE 60 (UNCOATED) REINFORCEMENT

BAR SIZE	NORMAL WEIGHT					
	F'c = 3000		F'c = 4000		F'c = 5000	
	Lhb	0.7Lhb	Lhb	0.7Lhb	Lhb	0.7Lhb
#3	9	6	8	6	7	6
#4	11	8	10	7	9	6
#5	14	10	12	9	11	8
#6	17	12	15	10	13	9
#7	20	14	17	12	15	11
#8	22	16	19	14	17	12
#9	25	18	22	15	20	14
#10	28	20	25	17	22	16
#11	31	22	27	19	24	17

Notes:
1. *All lengths shown in the table are in inches.*
2. *Lhb = Tension development length.*
3. *Ldh = Lhb, unless conditions of Item 4 are satisfied.*
4. *Ldh = 0.7 Lhb, when side cover normal to plane of hook is not less than 2 ½ inches and for 90° hook, cover on bar extension beyond hook shall not be less than 2 inches.*
5. *Hooks shall not be considered effective in developing bars in compression.*

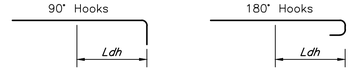

NO.	DATE	REVISIONS	APP.

QUIDDITY
Texas Board of Professional Engineers and Land Surveyors Reg. No. F-23290
6330 West Loop South, Suite 150 • Bellaire, TX 77401 • 713.777.5337

JOB NO: 00050–0099–01 DATE: 1/19/2026

APPROVED BY:

DATE: MAY 2026

DESIGNED BY: RMERHI

DRAWN BY: SFUENTES

SURVEYED BY:

FB NO. XXXXXX

INTERIM REVIEW
Not intended for construction, bidding or permit purposes.
Engineer: AHMAD DANESHVAR, P.E.
P.E. Serial No.: 132679
Date: MAY 2026

CITY OF HOUSTON
HOUSTON PUBLIC WORKS

SCOTT STREET NO. 1
LIFT STATION REHABILITATION
STRUCTURAL

STRUCTURAL NOTES & DETAILS SHEET 1 OF 4

WBS NUMBER
R–000267–127A–4

FOR CITY OF HOUSTON USE ONLY

DRAWING SCALE
AS NOTED

CITY OF HOUSTON PM
TAHA LOTIA

DWG NO. 0–S–1

SHEET NO. 104 OF 220

K:\00050\00050-0099-01 Scott St. No. 1 Lift Station Rehabilitation - Phase II Design\2 Design Phase\CAD\S-A0-STRUCT-NOTES.dwg

ORIGINAL SCALE IN INCHES FOR REDUCED PLANS

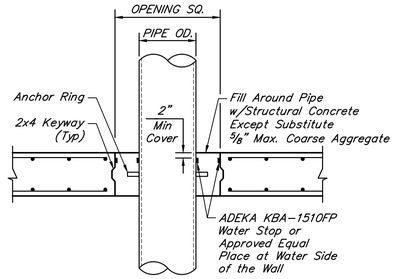

PIPE DIA.	OPENING SQ. (in)
4" – 20"	Pipe Nominal Diameter + 10"
24" – 54"	Pipe Nominal Diameter + 12"

PIPE (W/ANCHOR RING) OPENING DETAIL

SCALE 3/4" = 1'-0"

1

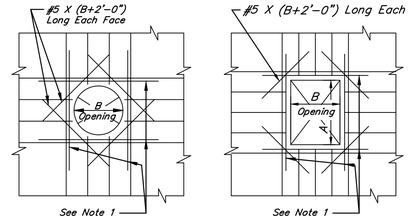

CIRCULAR RECTANGULAR

NOTE:

1. Provide additional bars equal to one-half of bars interrupted at each side of opening at 3" C/C. These bars shall be original sizes and lengths as those of the interrupted bars. (Typical for openings in slabs and walls.)
2. Additional bars are extended minimum development length beyond opening edge.
3. For openings 1'-0" or less, the slab steel can be respaced without additional reinforcing.

ADDITIONAL REINFORCING STEEL AT PIPE OPENINGS

NOT TO SCALE

2

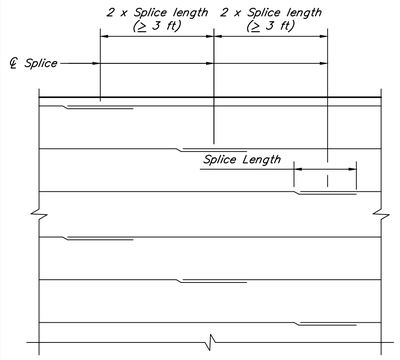

REBAR SPLICE LENGTH

#5– 2'-6" #6– 3'-0"
#7– 3'-6" #8– 4'-0"

HORIZONTAL WALL REINFORCING SPLICE LOCATION DETAILS

SCALE 3/8" = 1'-0"

3

NO.	DATE	REVISIONS	APP.

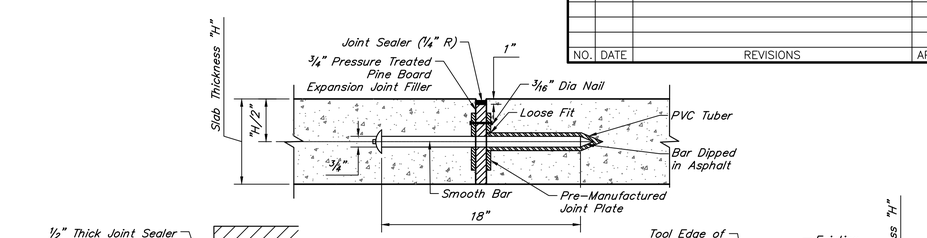

DOWELED EXPANSION JOINT

SCALE: 1 1/2 " = 1'-0"

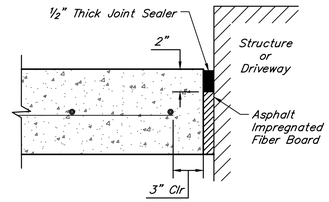

ISOLATION JOINT (IJ)

NOT TO SCALE

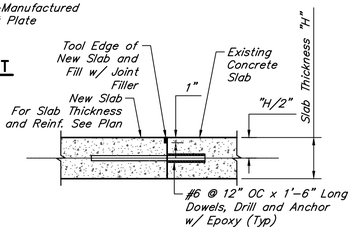

CONSTRUCTION JOINT AT EXISTING PAVEMENT

NOT TO SCALE

4

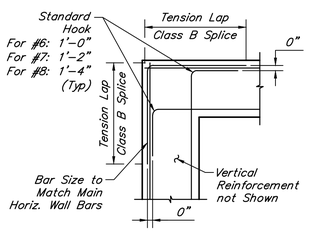

PLAN

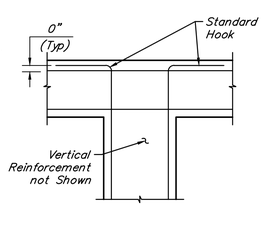

PLAN

WITHOUT CONSTRUCTION JOINT

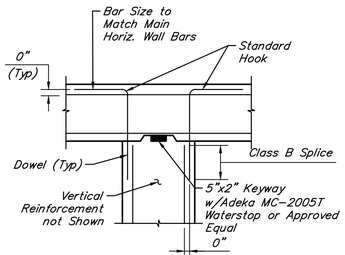

PLAN

WITH CONSTRUCTION JOINT

CORNER DETAILS

3/4" = 1'-0"

INTERSECTION DETAILS

1/2" = 1'-0"

5

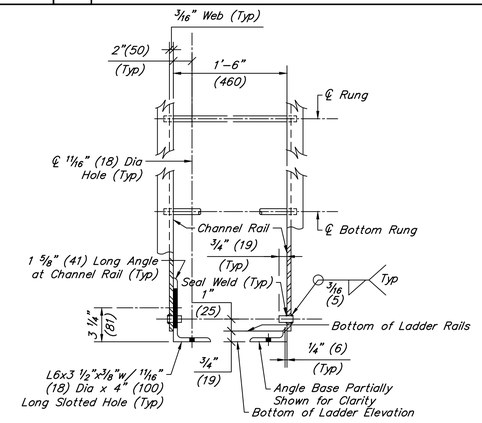

LADDER BASE CONNECTION FRONT ELEVATION

SCALE 1" = 1'-0"

6

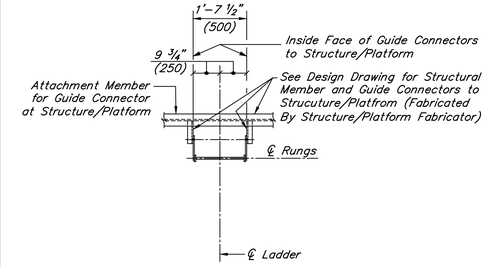

PLAN LADDER GUIDE CONNECTION DETAILS TO STRUCTURE/PLATFORM

SCALE N.T.S.

9

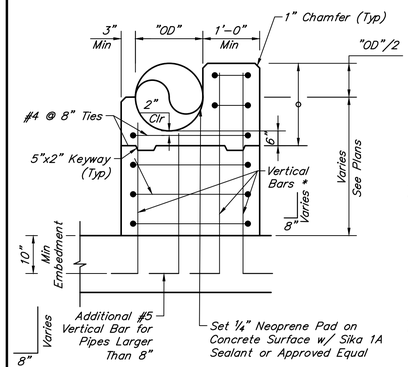

THRUST BLOCK ELEVATION

SCALE: 3/4" = 1'-0"

*VERTICAL BARS

PIPE DATA	NO. OF VERT BARS
4"–8"	3 x 2#5
10"–12"	3 x 3#5
14"–16"	3 x 4#5
18"–20"	3 x 4#5

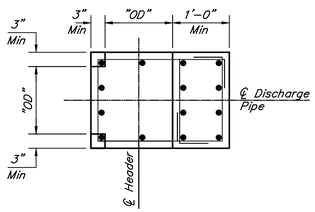

PLAN

(3x4 #5 LAYOUT IS SHOWN AS AN EXAMPLE)
SCALE: 3/4" = 1'-0"

7

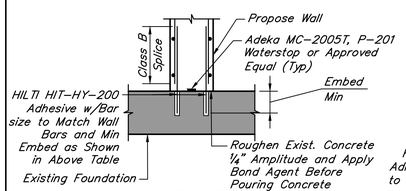

ELEVATION

NEW WALL TO EXISTING FOUNDATION CONNECTION
SCALE: 1/2" = 1'-0"

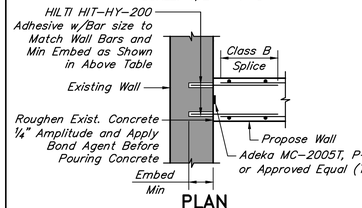

PLAN

NEW WALL TO EXISTING WALL CONNECTION
SCALE: 1/2" = 1'-0"

BAR SIZE	EMBED (MIN)
#5	7 1/2"
#6	9"
#7	10 1/2"
#8	12"
#9	13 1/2"

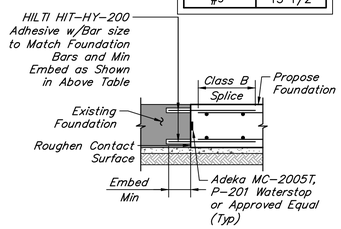

ELEVATION

NEW FOUNDATION TO EXISTING FOUNDATION CONNECTION
SCALE: 1/2" = 1'-0"

8

K:\00050\00050-0099-01 Scott St. No. 1 Lift Station Rehabilitation - Phase II Design\2 Design Phase\CAD\S-A0-STRUCT-NOTES.dwg

QUIDDITY
Texas Board of Professional Engineers and Land Surveyors Reg. No. F-23290
6330 West Loop South, Suite 150 • Bellaire, TX 77401 • 713.777.5337

JOB NO: 00050-0099-01 DATE: 1/19/2026

APPROVED BY:
DATE: MAY 2026
DESIGNED BY: RMERHI
DRAWN BY: SFUENTES
SURVEYED BY:
FB NO. XXXXXX

INTERIM REVIEW
Not intended for construction, bidding or permit purposes.
Engineer: AHMAD DANESHVAR, P.E.
P.E. Serial No.: 132679
Date: MAY 2026

CITY OF HOUSTON
HOUSTON PUBLIC WORKS

SCOTT STREET NO. 1 LIFT STATION REHABILITATION
STRUCTURAL

STRUCTURAL DETAILS SHEET 2 OF 4

WBS NUMBER	R-000267-127A-4
DRAWING SCALE	AS NOTED
CITY OF HOUSTON PM	TAHA LOTIA
DWG NO.	0-S-2
SHEET NO.	105 OF 220

FOR CITY OF HOUSTON USE ONLY

ORIGINAL SCALE IN INCHES FOR REDUCED PLANS

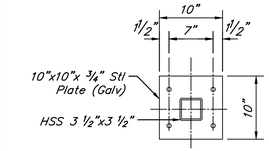

PLATE
SCALE 1"=1'-0"

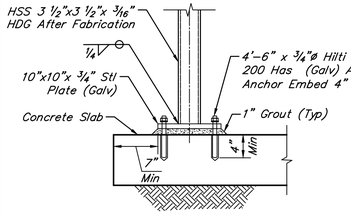

VIEW
SCALE 1"=1'-0"

DEVICE MOUNTING POST DETAIL
SCALE 1"=1'-0"

1

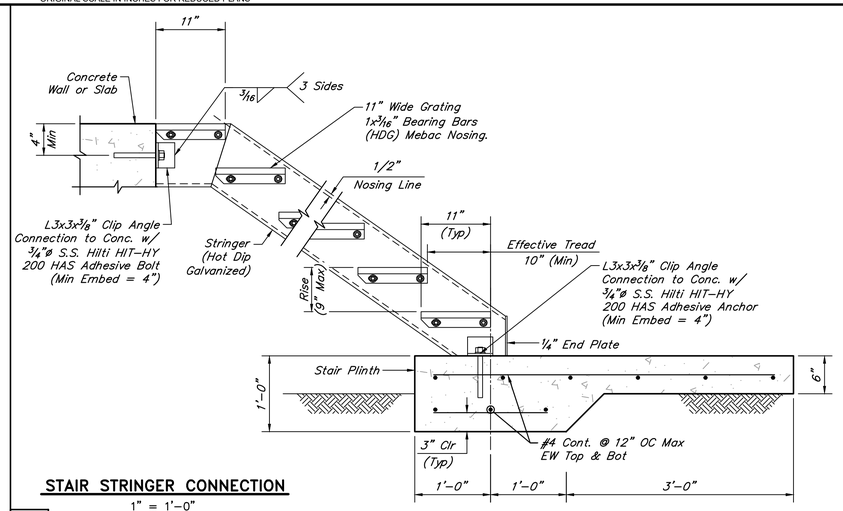

STAIR STRINGER CONNECTION
1" = 1'-0"

2

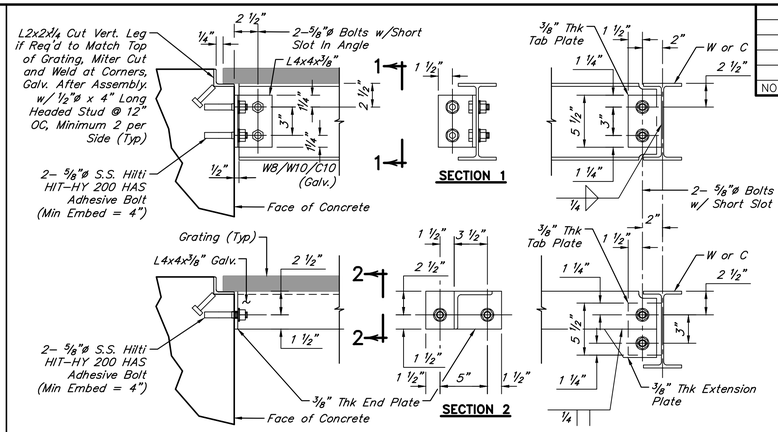

BEAM TO CONCRETE CONNECTION

BEAM TO BEAM CONNECTION

GRATING ANGLE SUPPORT AND BEAM
WHEN PROVIDING ALUMINUM OR STAINLESS STEEL GRATING AND 1/8" x 1" NEOPRENE, TEFLON OR UHMW POLYETHYLENE PAD, ADHERE TO ANGLE.
1 1/2" = 1'-0"

3

NO.	DATE	REVISIONS	APP.

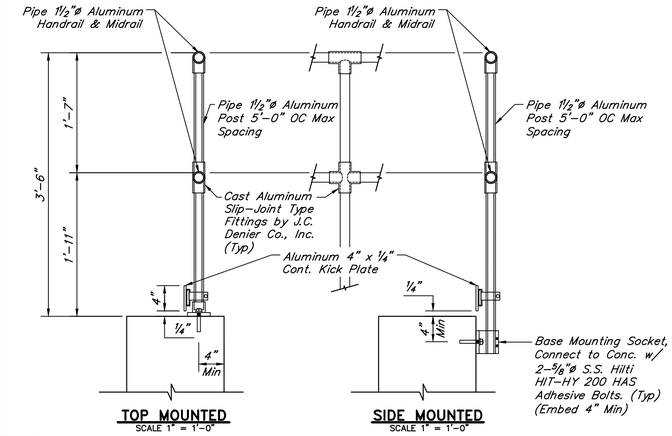

TOP MOUNTED
SCALE 1" = 1'-0"

SIDE MOUNTED
SCALE 1" = 1'-0"

ALUMINUM HANDRAIL

4

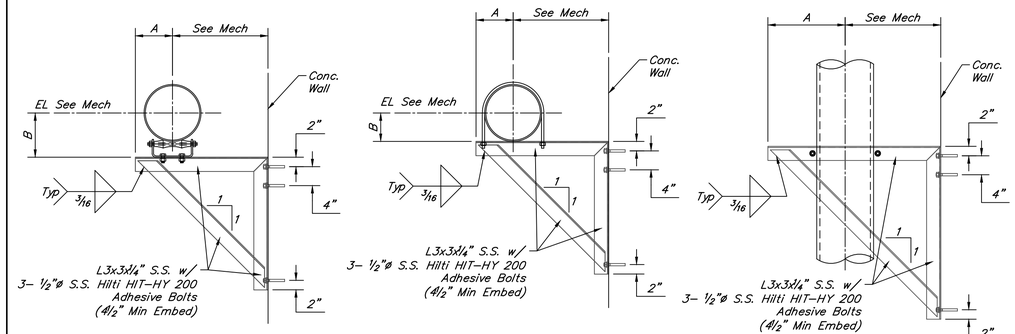

PIPE SUPPORT TYPE "A"
WITH ROLLER CHAIR

PIPE SUPPORT TYPE "B"
WITH U-BOLT

PIPE SUPPORT TYPE "C"
WITH U-BOLT

PIPE SUPPORT DETAIL

5

PIPE SUPPORT SCHEDULE

PS No.	PS Type	PIPE OD (in)	Dimensions A (in)	Dimensions B (in)
PS 1	A	10"	10"	10"
PS 2	C	6"	10"	--
PS 3	A	8"	10"	8⅛"
PS 4				
PS 5				
PS 6				

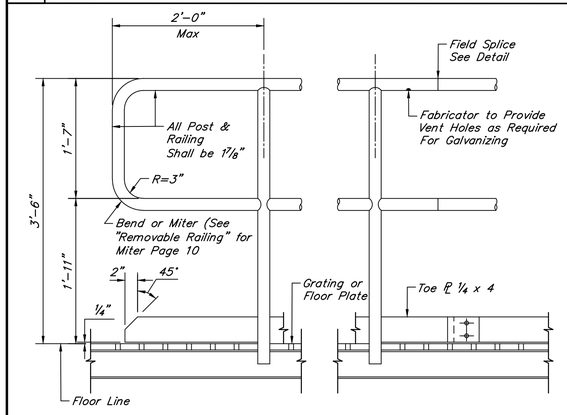

ELEVATION – TYPICAL RAILING
SCALE 1" = 1'-0"

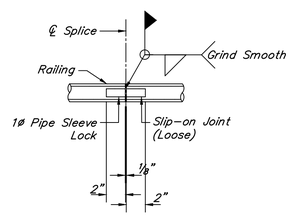

FIELD SPLICE DETAIL

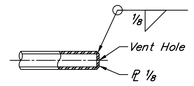

END CLOSURE DETAIL

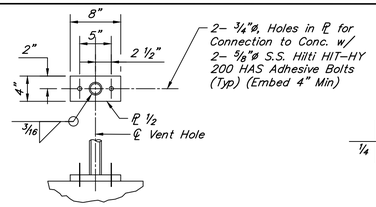

TOP MOUNTED POST CONNECTION TO CONC.
SCALE 1"=1'-0"

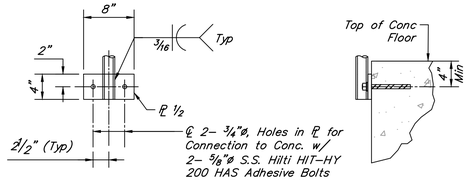

SIDE MOUNTED POST CONNECTION TO CONC.
SCALE 1"=1'-0"

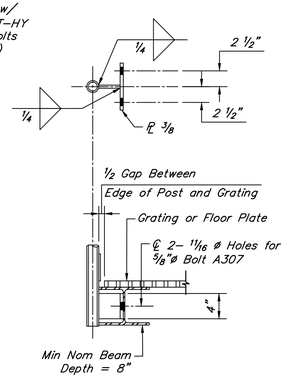

SIDE MOUNTED POST CONNECTION TO STEEL BEAM
SCALE 1"=1'-0"

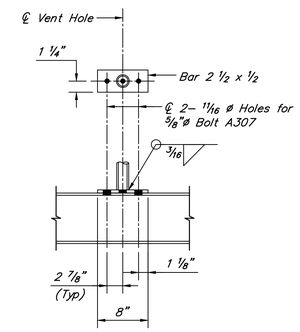

TOP MOUNTED POST CONNECTION TO STEEL BEAM
SCALE 1"=1'-0"

GALVANIZED STEEL HANDRAIL

6

K:\00050\00050-0099-01 Scott St. No. 1 Lift Station Rehabilitation - Phase II Design\2 Design Phase\CAD\S-A0-STRUCT-NOTES.dwg

QUIDDITY
Texas Board of Professional Engineers and Land Surveyors Reg. No. F-23290
6330 West Loop South, Suite 150 • Bellaire, TX 77401 • 713.777.5337

JOB NO: 00050-0099-01 DATE: 1/19/2026

APPROVED BY:

DATE: MAY 2026

DESIGNED BY: RMERHI

DRAWN BY: SFUENTES

SURVEYED BY:

FB NO. XXXXX

INTERIM REVIEW
Not intended for construction, bidding or permit purposes.
Engineer: AHMAD DANESHVAR, P.E.
P.E. Serial No.: 132679
Date: MAY 2026

CITY OF HOUSTON
HOUSTON PUBLIC WORKS

SCOTT STREET NO. 1
LIFT STATION REHABILITATION
STRUCTURAL

STRUCTURAL DETAILS
SHEET 3 OF 4

WBS NUMBER	FOR CITY OF HOUSTON USE ONLY
R-000267-127A-4	
DRAWING SCALE	
AS NOTED	
CITY OF HOUSTON PM	
TAHA LOTIA	
DWG NO. O-S-3	
SHEET NO. 106 OF 220	

0 1 2 3 4 5 ORIGINAL SCALE IN INCHES FOR REDUCED PLANS

NO.	DATE	REVISIONS	APP.

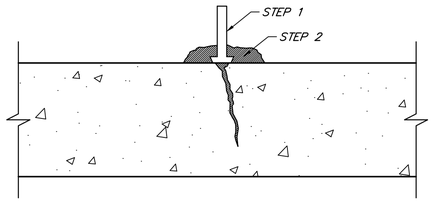

1. CLEAN THE CONCRETE SURFACE AND SET PORTING DEVICES OVER CRACKS.
2. PLACE MIXED SIKADUR 31, HI–MOD GEL EPOXY RESIN ADHESIVE, OR APPROVED EQUAL, OVER CRACKS AND AROUND EACH INJECTION PORT A MIN. OF 1" WIDE BY ⅛" THICK.
3. ALLOW SUFFICIENT TIME FOR EPOXY RESIN ADHESIVE CAP SEAL TO SET BEFORE INJECTING.
4. WHEN THE CAP SEAL HAS CURED, INJECT SIKADUR 35, HI–MOD LV, OR APPROVED EQUAL, WITH STEADY PRESSURE. PER MANUFACTURER INSTRUCTION.
5. USE AUTOMATED INJECTION EQUIPMENT OR MANUAL METHOD.

CRACK NO. 1 FILLER/CAP SEAL @ CRACKS > 1/8"

SCALE: 1 1/2" = 1'–0"

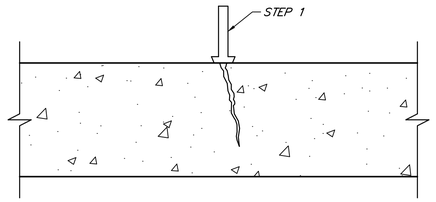

1. CLEAN THE CONCRETE SURFACE AND SET PORTING DEVICES OVER CRACKS. PER MANUFACTURER INSTRUCTION.
2. INJECT SIKAFIX HH+HYDROPHOBIC URETHANE OR APPROVED EQUAL.
3. USE AUTOMATED INJECTION EQUIPMENT OR MANUAL METHOD.
4. BEGIN INJECTING AT THE BOTTOM OF THE CRACK AND WORK VERTICALLY.

CRACK NO. 2 FILLER @ HAIRLINE CRACKS

SCALE: 1 1/2" = 1'–0"

Provide Min Cover of 3" for Bottom of Beams, 1½" for Sides of Beams, and 1 ½" for Bottom of Slabs

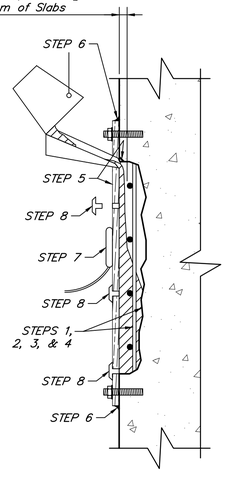

1. BREAK–OUT CRACKED OR SPALLED CONCRETE AND REMOVE ANY FORM OR OTHER DEBRIS UNTIL SOLID CONCRETE IS REACHED.
2. REPLACE STEEL REINFORCEMENT AS DIRECTED BY ENGINEER. FOR REINFORCING REPLACEMENT, REFER TO DETERIORATED REINFORCING REPLACEMENT DETAIL.
3. PREPARE SURFACE ACCORDING TO THE SIKACRETE 211 SPECIFICATIONS AND/OR MANUFACTURER'S RECOMMENDATIONS.
4. PRE–WET SURFACE TO SSD. APPLY BOND AGENT SIKA ARMATEC 110 EPOCEM, OR APPROVED EQUAL, TO REINFORCING STEEL.
5. SET FORM AND CHIP SPOT FOR POUR BOX. APPLY RELEASE AGENT TO FORM, OR USE PLASTIC LINED PLYWOOD.
6. RUN BEAD OF SIKAFLEX 1A, OR APPROVED EQUAL, AROUND FORM EDGE, LET CURE, THEN ANCHOR FORM. FILL WITH WATER TO CHECK FOR WATER TIGHTNESS. LET DRAIN TO NO FREE STANDING WATER.
7. VIBRATE FORM WHILE POURING SIKACRETE 211, OR APPROVED EQUAL.
8. VENT TO BE CAPPED WHEN STEADY FLOW IS EVIDENT.
9. STRIP FORM WHEN APPROPRIATE.
10. DRY PACK ANCHOR HOLES WITH MORTAR.

FORM AND POUR (VERTICAL) CONCRETE REPAIR

NOT TO SCALE

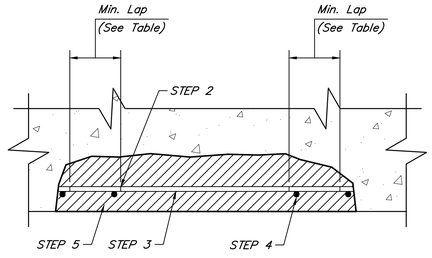

1. SHORE STRUCTURE AS REQUIRED PRIOR TO MODIFICATIONS OF STRUCTURAL CONNECTIONS.
2. EXPOSED REINFORCING STEEL SHOULD BE MECHANICALLY CLEANED OR SAND BLASTED TO REMOVE ALL TRACES OF RUST.
3. DETERMINE STEEL SECTION LOSS FOR EACH EXPOSED REINFORCING BAR. REPLACE BARS WHERE MORE THAN 25% AREA LOSS HAS OCCURRED, AS DIRECTED BY THE ENGINEER.
4. SPLICE EXISTING BAR W/ A NEW BAR (ASTM A615 GRADE 60) OF STEEL CROSS SECTIONAL AREA EQUIVALENT TO 68% OF THE CROSS SECTIONAL AREA OF THE EXISTING BAR.
5. COMPLETE CONCRETE REPAIR. (SEE DETAIL)

DETERIORATED REINFORCING REPLACEMENT

NOT TO SCALE

BAR SIZE	DIAMETER (IN.)	CROSS–SECTIONAL AREA (IN^2)	MIN. LAP (IN.)
#3	0.375	0.11	12
#4	0.500	0.20	15
#5	0.625	0.31	19
#6	0.750	0.44	23
#7	0.875	0.60	33
#8	1.000	0.79	37
#9	1.128	1.00	42
#10	1.270	1.27	47
#11	1.410	1.56	52

NOTE:

LAP LENGTHS SHOWN ARE FOR COVERS OF AT LEAST 1.0 BAR DIAMETER AND HORIZONTAL C.C. SPACING OF AT LEAST 2.0 BAR DIAMETERS. IF THE LATTER CANNOT BE ACHIEVED ON A BEAM, CRACK FILLER/CAP SEAL DETAIL MAY BE USED. OTHERWISE, IF AN ADEQUATE SPLICE LENGTH CANNOT BE ACHIEVED, USE AN APPROVED MECHANICAL OR WELDED SPLICE CAPABLE OF DEVELOPING AT LEAST 125% OF THE SPECIFIED YIELD STRENGTH OF THE BAR. ALL WELDING SHALL CONFORM TO "STRUCTURAL WELDING CODE – REINFORCING STEEL" (ANSI/AWS D1.4). NEW REINFORCING TO BE WELDED SHALL CONFORM TO ASTM A706. IF A CHEMICAL ANALYSIS OF THE EXISTING BARS IS NOT KNOWN OR OBTAINED, THEN THE EXISTING BARS SHOULD BE PREHEATED PER ANSI/AWS D1.4.

QUIDDITY
Texas Board of Professional Engineers and Land Surveyors Reg. No. F-23290
6330 West Loop South, Suite 150 • Bellaire, TX 77401 • 713.777.5337

JOB NO: 00050–0099–01 DATE: 1/19/2026

APPROVED BY:

DATE: MAY 2026

DESIGNED BY: RMERHI

DRAWN BY: SFUENTES

SURVEYED BY:

FB NO. XXXXXX

INTERIM REVIEW
Not intended for construction, bidding or permit purposes.
Engineer: AHMAD DANESHVAR, P.E.
P.E. Serial No.: 132679
Date: MAY 2026

CITY OF HOUSTON
HOUSTON PUBLIC WORKS

SCOTT STREET NO. 1
LIFT STATION REHABILITATION
STRUCTURAL

STRUCTURAL DETAILS
SHEET 4 OF 4

WBS NUMBER	FOR CITY OF HOUSTON USE ONLY
R–000267–127A–4	
DRAWING SCALE	
AS NOTED	
CITY OF HOUSTON PM	
TAHA LOTIA	
DWG NO. 0–S–4	
SHEET NO. 107 OF 220	

K:\00050\00050-0099-01 Scott St. No. 1 Lift Station Rehabilitation - Phase II Design\2 Design Phase\CAD\S-A0-STRUCT-NOTES.dwg

ORIGINAL SCALE IN INCHES FOR REDUCED PLANS

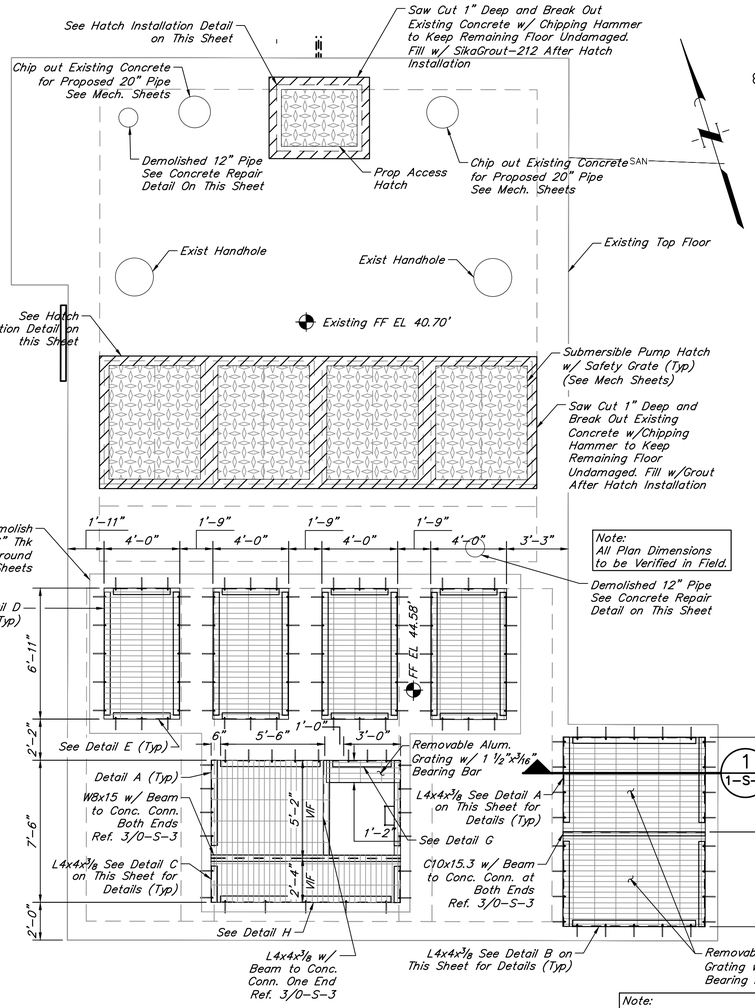

UPPER GRATING PLAN @ TOS 40.70'

SCALE: 1/4" = 1'-0"

Note:
1. Grating Supports Shall be Installed on Both Levels. See Section C & Grating Plan-2 for Details.
2. For Ladder Details see Mechanical Sheets.

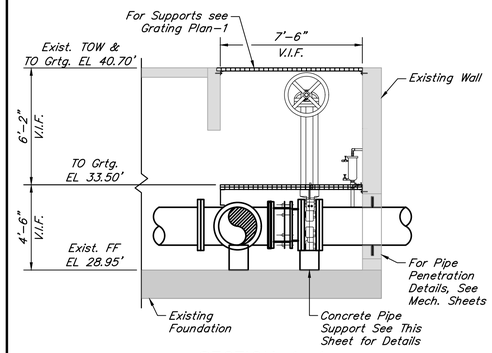

SECTION 1-1

SCALE: 1/4" = 1'-0"

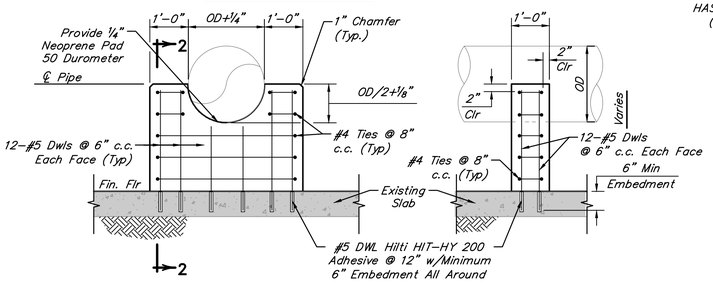

SECTION 2-2

Note:
Contractor Shall Adjust Elevation In Accordance With Dimension From Approved Manufacturer Submittal.

PIPE SUPPORT DETAIL

SCALE: 1/2" = 1'-0"

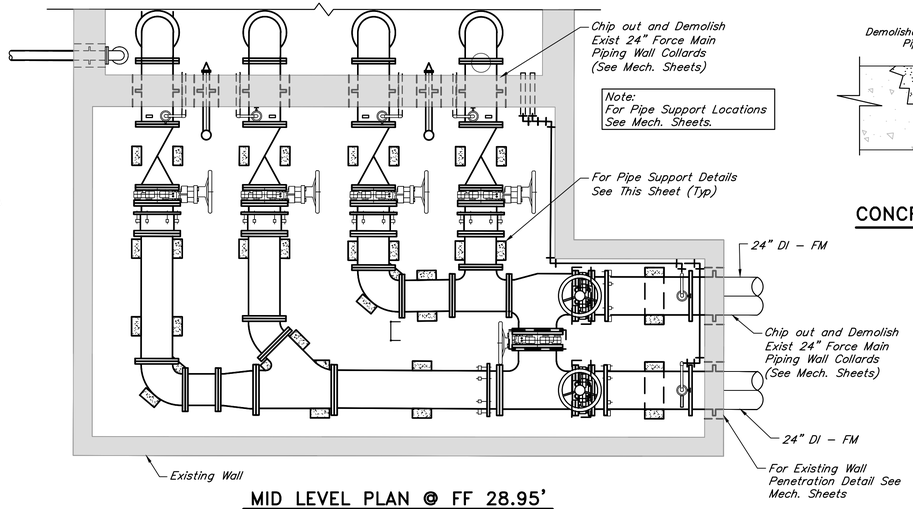

MID LEVEL PLAN @ FF 28.95'

SCALE: 1/4" = 1'-0"

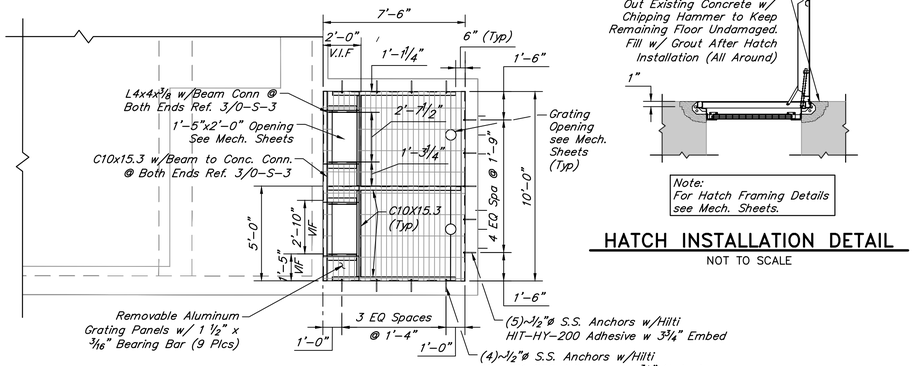

MID GRATING PLAN @ TOG 33.50'

SCALE: 1/4" = 1'-0"

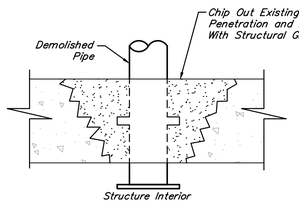

CONCRETE REPAIR DETAIL

NOT TO SCALE

Note:
For Hatch Framing Details see Mech. Sheets.

HATCH INSTALLATION DETAIL

NOT TO SCALE

DETAIL A

SCALE: 1/2" = 1'-0"

DETAIL B

SCALE: 1/2" = 1'-0"

DETAIL C

SCALE: 1/2" = 1'-0"

DETAIL D

SCALE: 1/2" = 1'-0"

DETAIL E

SCALE: 1/2" = 1'-0"

DETAIL F

SCALE: 1/2" = 1'-0"

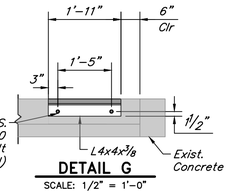

DETAIL G

SCALE: 1/2" = 1'-0"

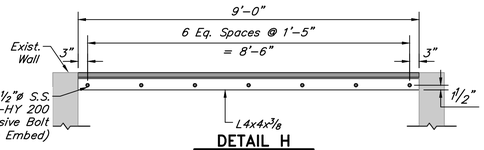

DETAIL H

SCALE: 1/2" = 1'-0"

Note:
At New Concrete Break Out or Saw Cut Locations, Cover Exposed Face w/ High Solid Epoxy In Two Coats. Total Dry Film Thk. To Be 125 Mils Avg., 100 Mils Min (Typ). For Supplementary Info, Ref. Protective Coating Spec (09921)

NO.	DATE	REVISIONS	APP.

QUIDDITY
Texas Board of Professional Engineers and Land Surveyors Reg. No. F-23290
6330 West Loop South, Suite 150 • Bellaire, TX 77401 • 713.777.5337

JOB NO: 00050-0099-01 DATE: 1/19/2026

APPROVED BY:

DATE: MAY 2026

DESIGNED BY: JTREVINO

DRAWN BY: ASALGADO

SURVEYED BY:

FB NO. XXXXXX

INTERIM REVIEW
Not intended for construction, bidding or permit purposes.
Engineer: AHMAD DANESHVAR, P.E.
P.E. Serial No.: 132679
Date: MAY 2026

CITY OF HOUSTON
HOUSTON PUBLIC WORKS

SCOTT STREET NO. 1
LIFT STATION REHABILITATION
STRUCTURAL

DRY WEATHER PUMP STATION IMPROVEMENT PLAN

WBS NUMBER	FOR CITY OF HOUSTON USE ONLY
R-000267-127A-4	
DRAWING SCALE	
AS NOTED	
CITY OF HOUSTON PM	
TAHA LOTIA	
DWG NO. 1-S-1	
SHEET NO. 108 OF 220	

K:\00050\00050-0099-01 Scott St. No. 1 Lift Station Rehabilitation - Phase II Design\2 Design Phase\CAD\S-A1-DRY WEATHER PUMP STATION.dwg

ORIGINAL SCALE IN INCHES FOR REDUCED PLANS

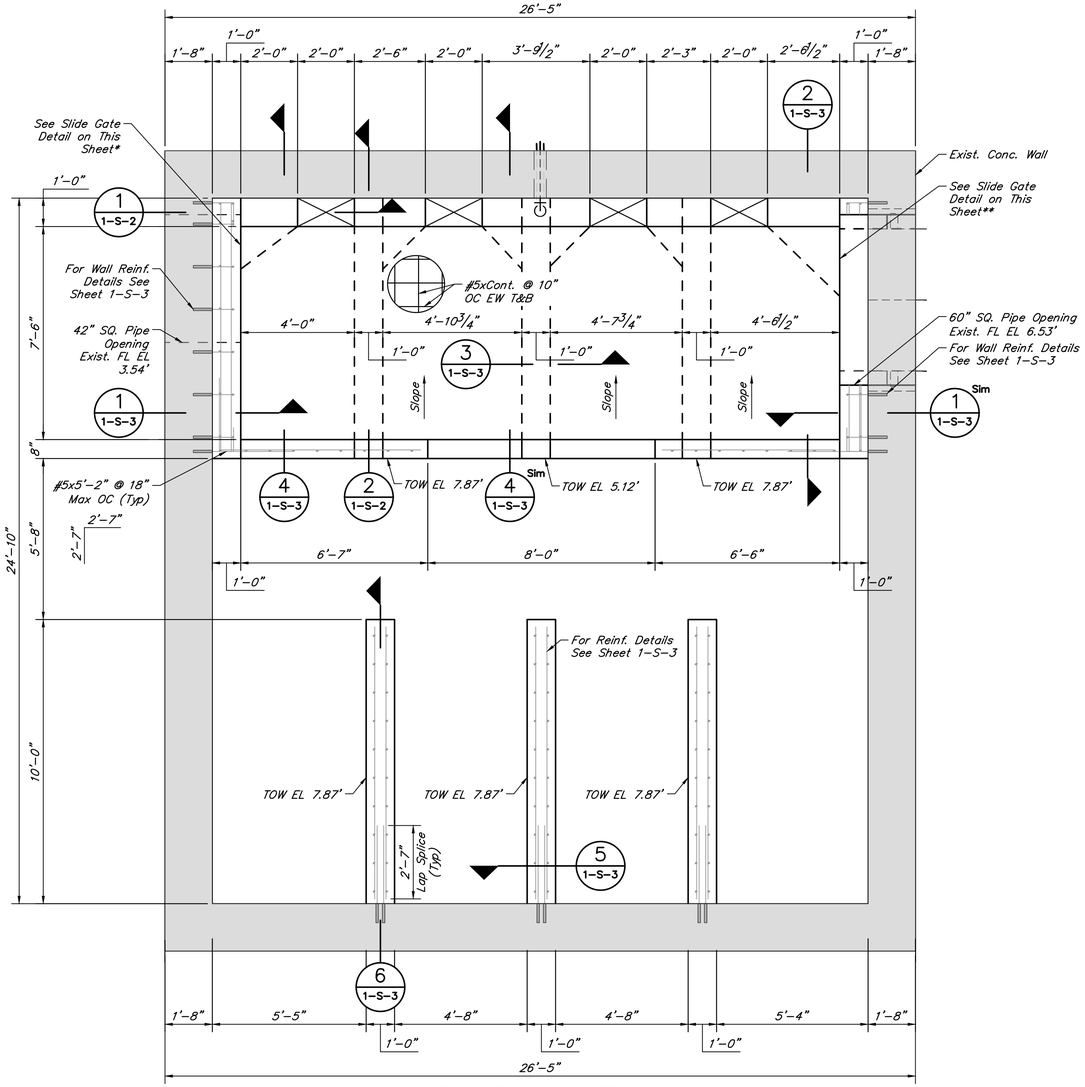

LOWER LEVEL PLAN @ FF -1.97

SCALE: 3/8" = 1'-0"

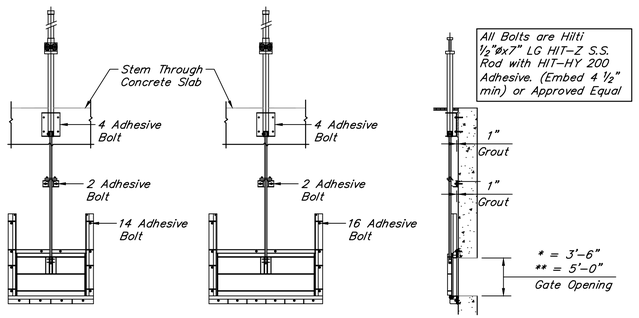

FOR 42" OPENING | FOR 60" OPENING | SIDE ELEVATION

SLIDE GATE TO CONCRETE WALL FIXING DETAIL

1/4" = 1'-0"

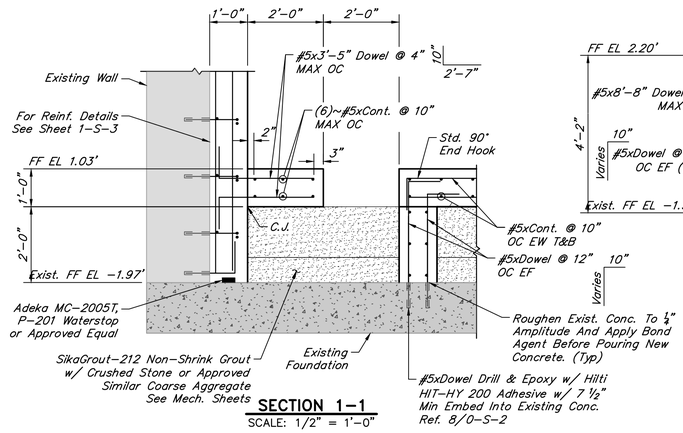

SECTION 1-1

SCALE: 1/2" = 1'-0"

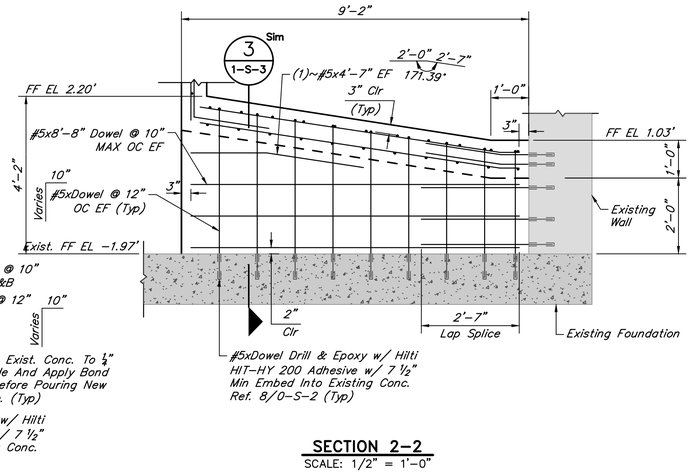

SECTION 2-2

SCALE: 1/2" = 1'-0"

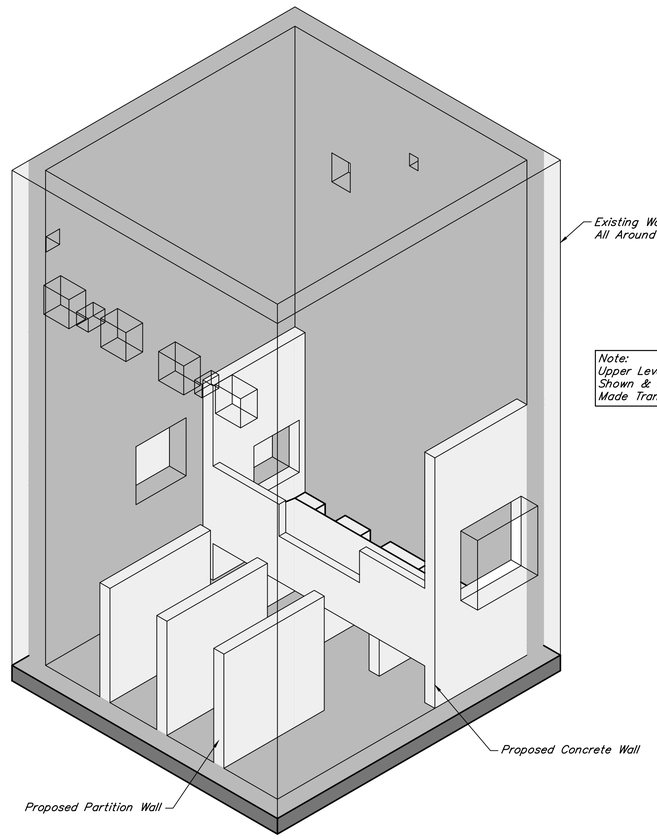

3D VIEW

SCALE: 3/16" = 1'-0"

NO.	DATE	REVISIONS	APP.

QUIDDITY

Texas Board of Professional Engineers and Land Surveyors Reg. No. F-23290
6330 West Loop South, Suite 150 • Bellaire, TX 77401 • 713.777.5337

JOB NO: 00050-0099-01 DATE: 1/19/2026

APPROVED BY:

DATE: MAY 2026

DESIGNED BY: JTREVINO

DRAWN BY: ASALGADO

SURVEYED BY:

FB NO. XXXXXX

INTERIM REVIEW
Not intended for construction, bidding or permit purposes.
Engineer: AHMAD DANESHVAR, P.E.
P.E. Serial No.: 132679
Date: MAY 2026

CITY OF HOUSTON
HOUSTON PUBLIC WORKS

SCOTT STREET NO. 1 LIFT STATION REHABILITATION

STRUCTURAL

DRY WEATHER PUMP STATION LOWER LEVEL PLAN & 3D VIEW

WBS NUMBER	FOR CITY OF HOUSTON USE ONLY
R-000267-127A-4	
DRAWING SCALE	
AS NOTED	
CITY OF HOUSTON PM	
TAHA LOTIA	
DWG NO. 1-S-2	
SHEET NO. 109 OF 220	

K:\00050\00050-0099-01 Scott St. No. 1 Lift Station Rehabilitation - Phase II Design\2 Design Phase\CAD\S-A1-DRY WEATHER PUMP STATION.dwg

ORIGINAL SCALE IN INCHES FOR REDUCED PLANS

NO.	DATE	REVISIONS	APP.

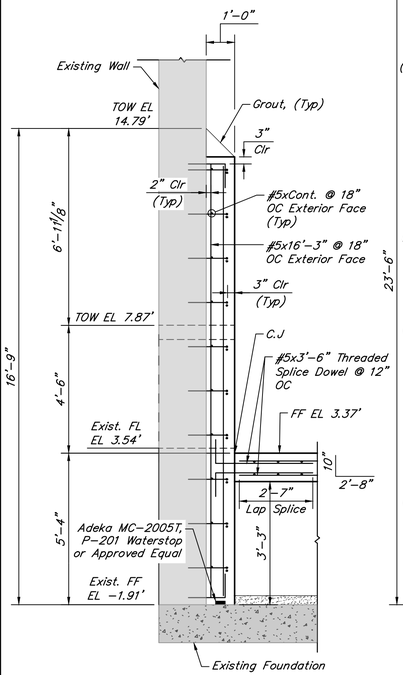

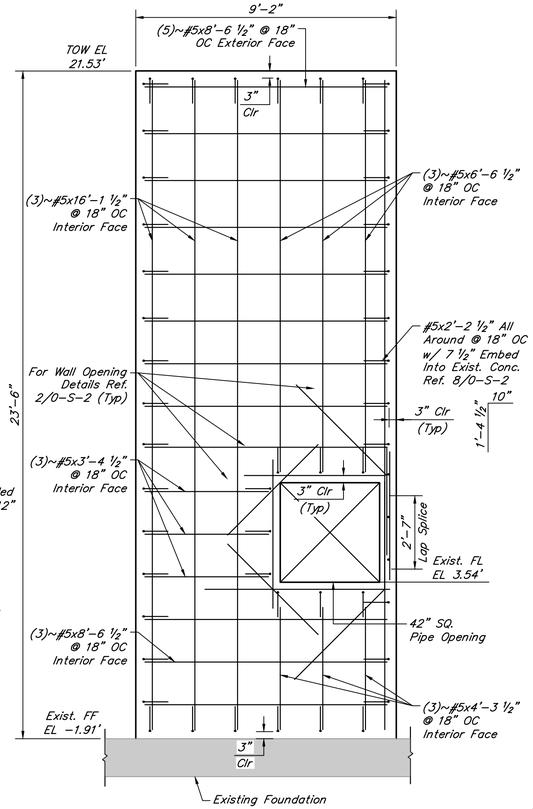

SECTION 1-1
SCALE: 3/8" = 1'-0"

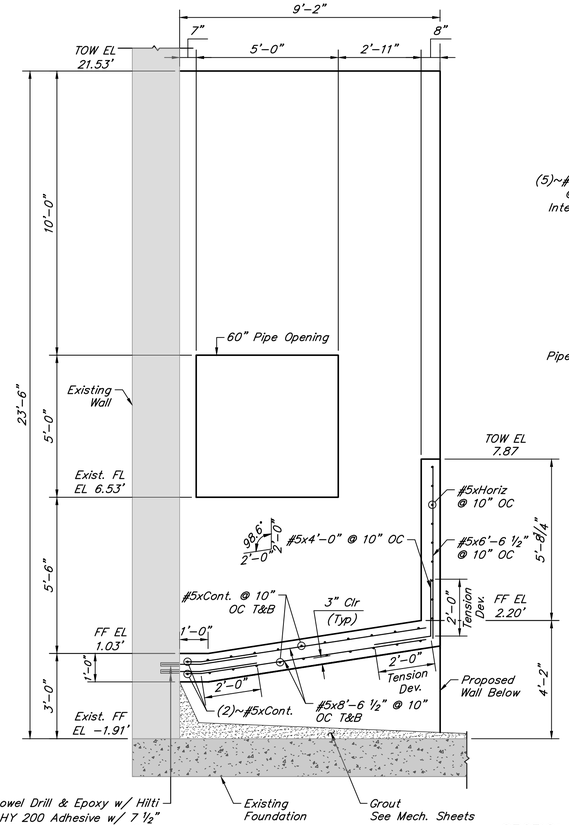

SECTION 2-2
SCALE: 3/8" = 1'-0"

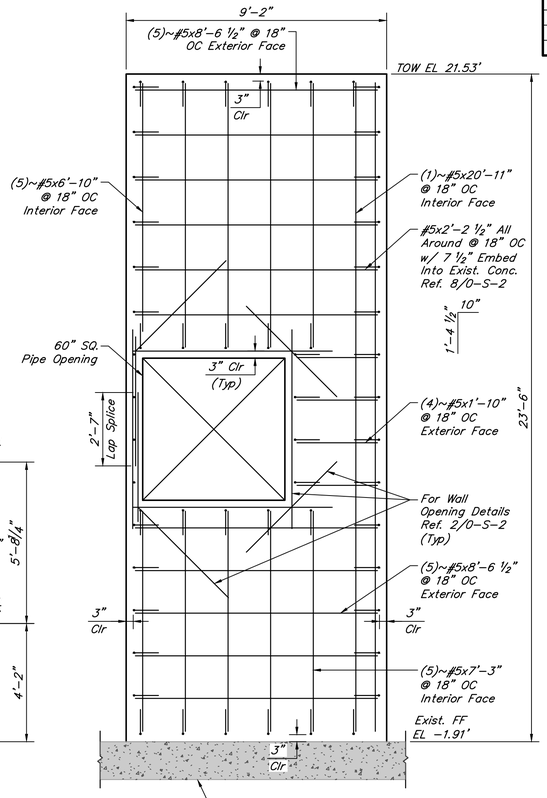

Note:
For Existing To Proposed Concrete Roughen Existing Concrete To 1/4" Amplitude And Apply Bond Agent Before Pouring New Concrete.

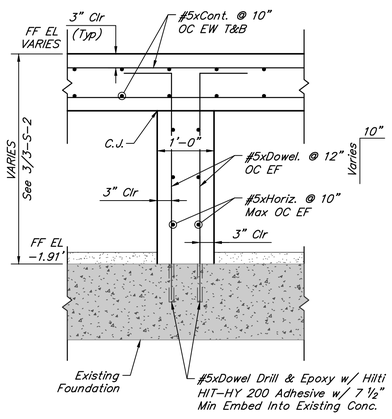

SECTION 3-3
SCALE: 3/4" = 1'-0"

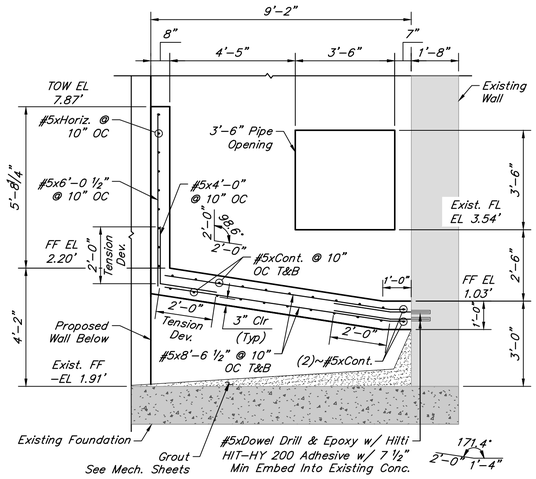

SECTION 4-4
SCALE: 3/8" = 1'-0"

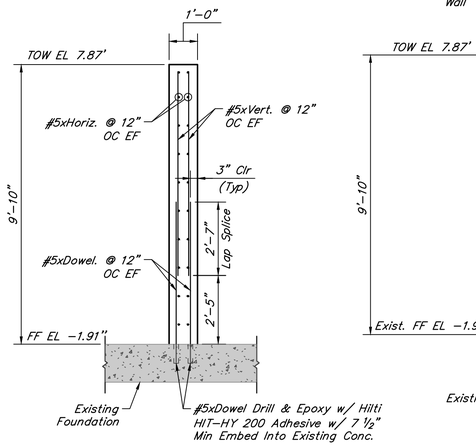

SECTION 5-5
SCALE: 3/8" = 1'-0"

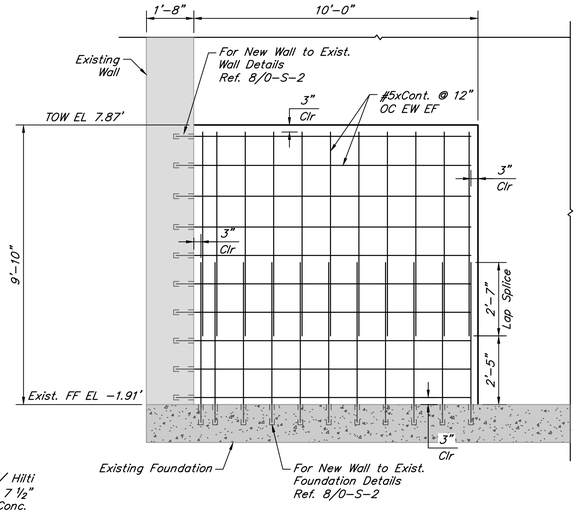

SECTION 6-6
SCALE: 3/8" = 1'-0"

QUIDDITY
Texas Board of Professional Engineers and Land Surveyors Reg. No. F-23290
6330 West Loop South, Suite 150 • Bellaire, TX 77401 • 713.777.5337

JOB NO: 00050-0099-01 DATE: 1/19/2026

APPROVED BY:
DATE: MAY 2026
DESIGNED BY: JTREVINO
DRAWN BY: ASALGADO
SURVEYED BY:
FB NO. XXXXXX

INTERIM REVIEW
Not intended for construction, bidding or permit purposes.
Engineer: AHMAD DANESHVAR, P.E.
P.E. Serial No.: 132679
Date: MAY 2026

CITY OF HOUSTON
HOUSTON PUBLIC WORKS

SCOTT STREET NO. 1 LIFT STATION REHABILITATION
STRUCTURAL

DRY WEATHER PUMP STATION LOWER LEVEL SECTIONS

WBS NUMBER	FOR CITY OF HOUSTON USE ONLY
R-000267-127A-4	
DRAWING SCALE	
AS NOTED	
CITY OF HOUSTON PM	
TAHA LOTIA	
DWG NO. 1-S-3	
SHEET NO. 110 OF 220	

K:\00050\00050-0099-01 Scott St. No. 1 Lift Station Rehabilitation - Phase II Design\2 Design Phase\CAD\S-A1-DRY WEATHER PUMP STATION.dwg

ORIGINAL SCALE IN INCHES FOR REDUCED PLANS

NO.	DATE	REVISIONS	APP.

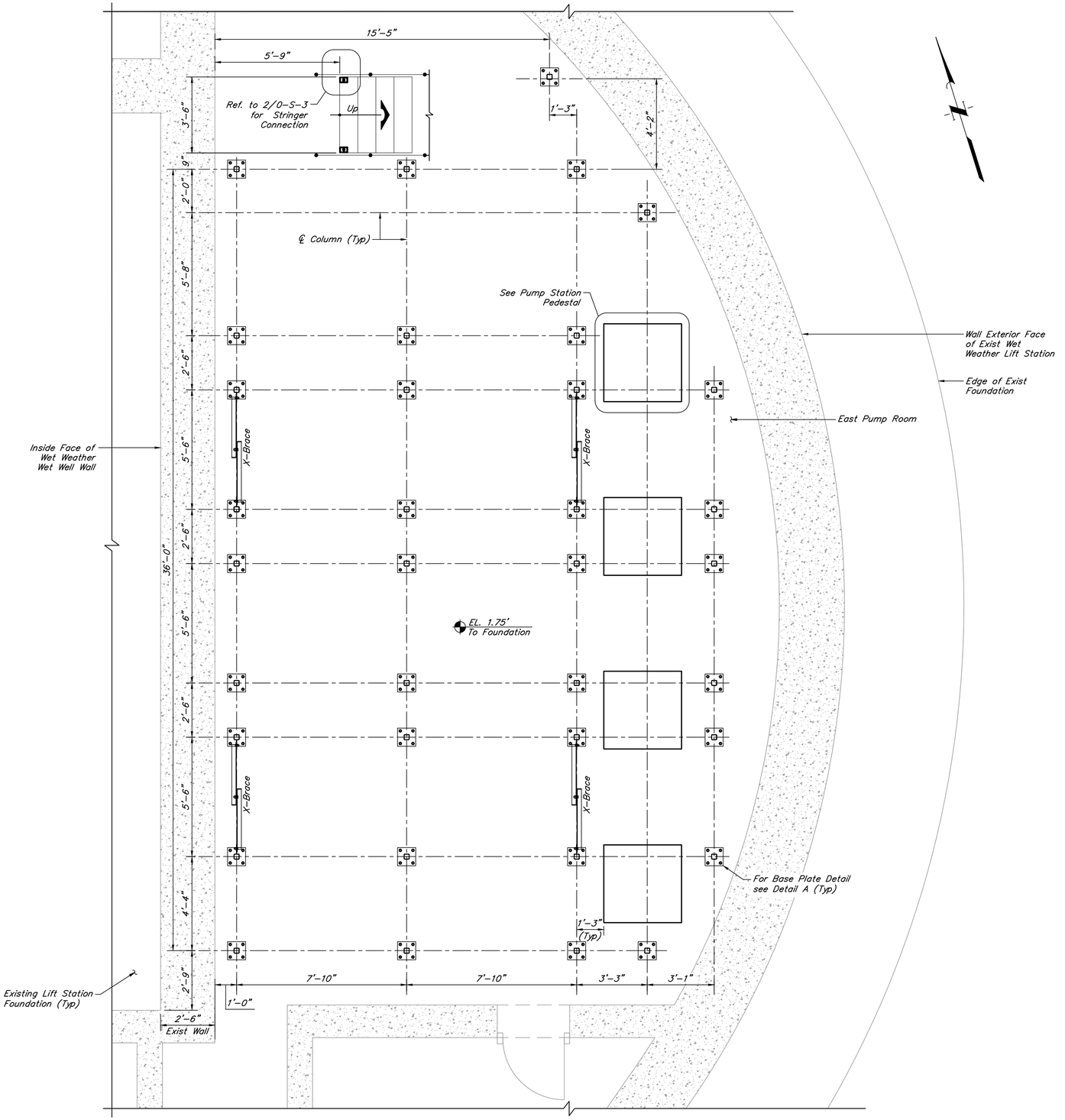

WET WEATHER LIFT STATION WALKWAY FOUNDATION PLAN
(EAST SIDE SHOWN, WEST SIDE WILL BE A MIRRORED LAYOUT OF THE EAST SIDE)
3/8" = 1'-0"

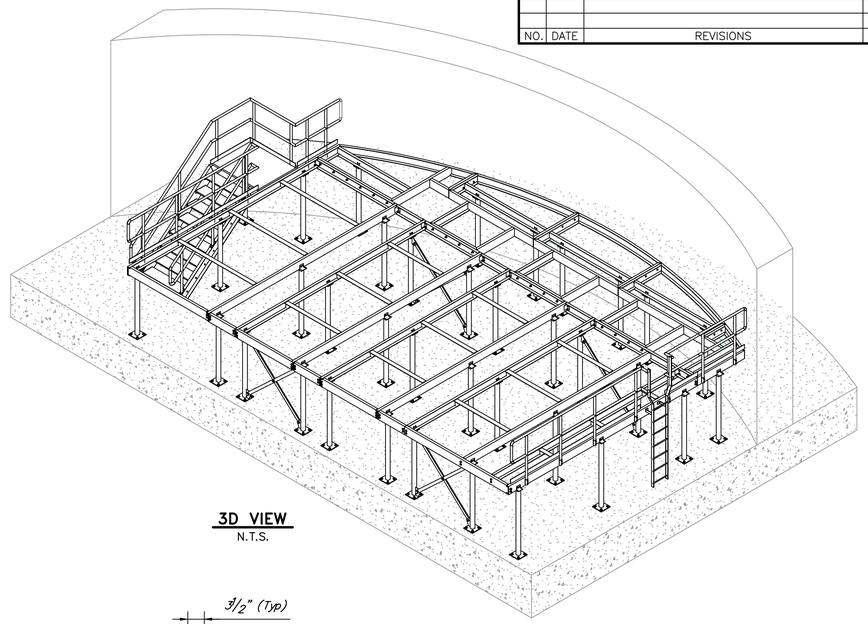

3D VIEW
N.T.S.

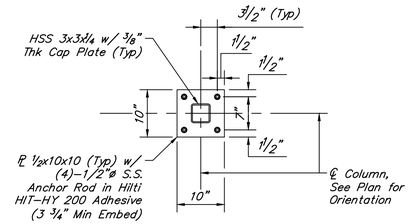

DETAIL A
SCALE: 3/4" = 1'-0"

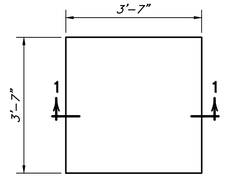

PUMP STATION PEDESTAL PLAN
1/2" = 1'-0"

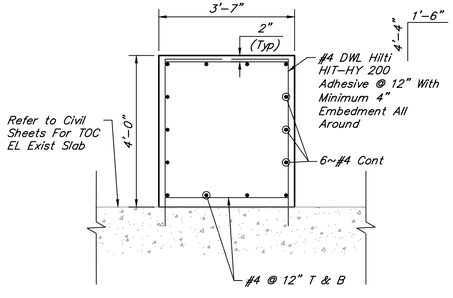

SECTION 1-1
SCALE: 1" = 1'-0"

QUIDDITY
Texas Board of Professional Engineers and Land Surveyors Reg. No. F-23290
6330 West Loop South, Suite 150 • Bellaire, TX 77401 • 713.777.5337

JOB NO: 00050-0099-01 DATE: 1/19/2026

APPROVED BY:

DATE: MAY 2026

DESIGNED BY: FFOROUZANNIA

DRAWN BY: SFUENTES

SURVEYED BY:

FB NO. XXXXXX

INTERIM REVIEW
Not intended for construction, bidding or permit purposes.
Engineer: AHMAD DANESHVAR, P.E.
P.E. Serial No.: 132679
Date: MAY 2026

CITY OF HOUSTON
HOUSTON PUBLIC WORKS

SCOTT STREET NO. 1 LIFT STATION REHABILITATION
STRUCTURAL

WET WEATHER LIFT STATION WALKWAY PLATFORM FOUNDATION

WBS NUMBER	FOR CITY OF HOUSTON USE ONLY
R-000267-127A-4	
DRAWING SCALE	
AS NOTED	
CITY OF HOUSTON PM	
TAHA LOTIA	
DWG NO. 2-S-1	
SHEET NO. 111 OF 220	

K:\00050\00050-0099-01 Scott St. No. 1 Lift Station Rehabilitation - Phase II Design\2 Design Phase\CAD\S-A2-WET WEATHER LS.dwg

ORIGINAL SCALE IN INCHES FOR REDUCED PLANS

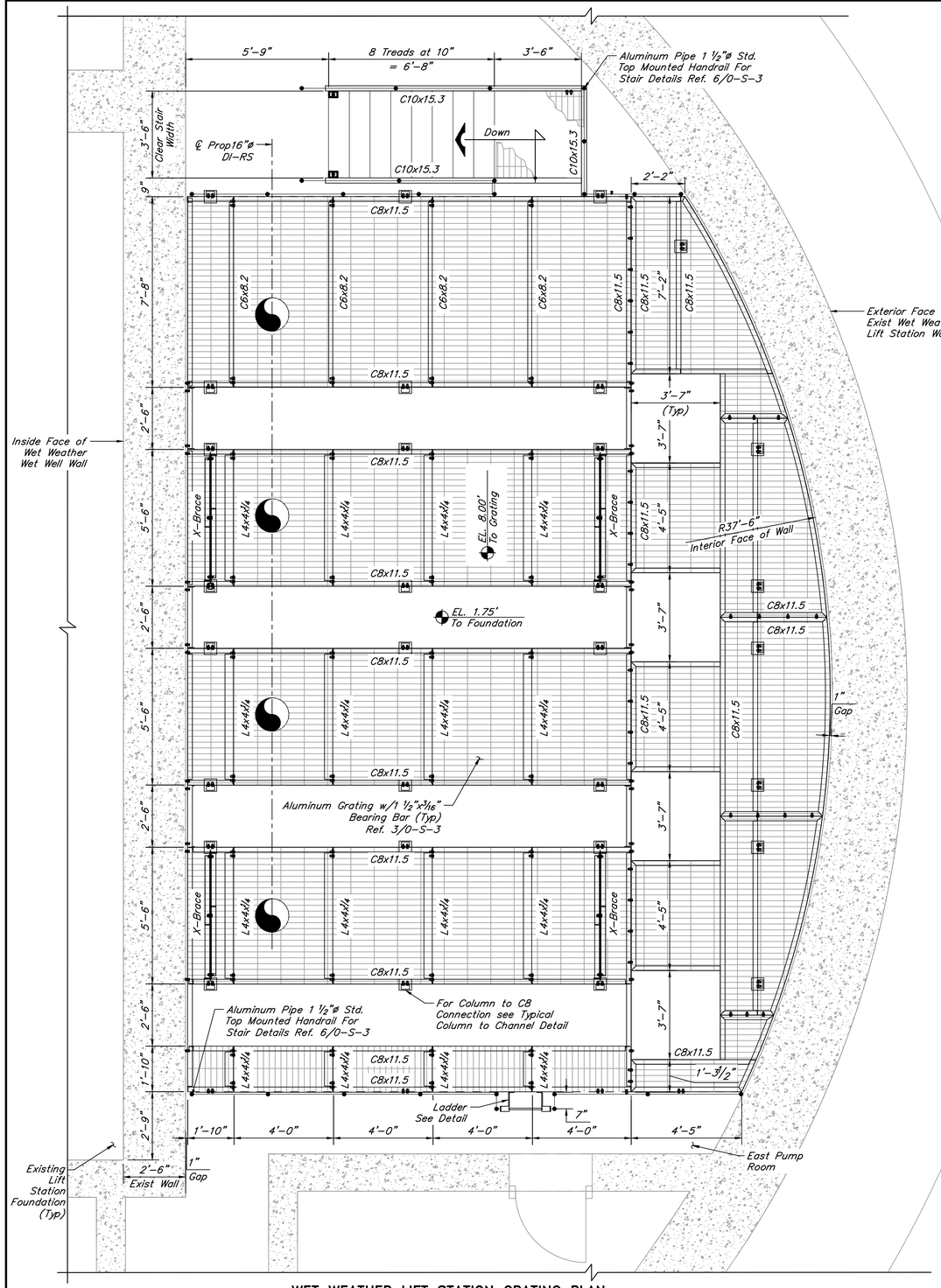

WET WEATHER LIFT STATION GRATING PLAN

(EAST SIDE SHOWN; WEST SIDE WILL BE A MIRRORED LAYOUT OF THE EAST SIDE)
ALL HORIZONTAL BEAMS ARE C8x11.5 (UNO)
3/8" = 1'-0"

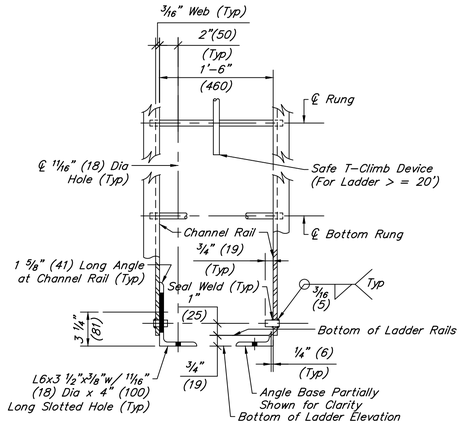

LADDER BASE CONNECTION FRONT ELEVATION

SCALE 1" = 1'-0"

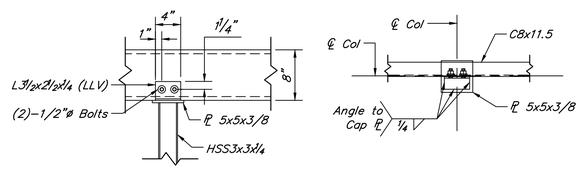

TYPICAL COLUMN TO CHANNEL

SCALE: 1" = 1'-0"

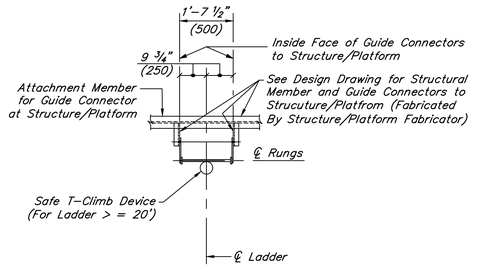

PLAN LADDER GUIDE CONNECTION DETAILS TO STRUCURE/PLATFORM

SCALE N.T.S.

NO.	DATE	REVISIONS	APP.

QUIDDITY
Texas Board of Professional Engineers and Land Surveyors Reg. No. F-23290
6330 West Loop South, Suite 150 • Bellaire, TX 77401 • 713.777.5337

JOB NO: 00050-0099-01 DATE: 1/19/2026

APPROVED BY:
DATE: MAY 2026
DESIGNED BY: FFOROUZANNIA
DRAWN BY: SFUENTES
SURVEYED BY:
FB NO. XXXXXX

INTERIM REVIEW
Not intended for construction, bidding or permit purposes.
Engineer: AHMAD DANESHVAR, P.E.
P.E. Serial No.: 132679
Date: MAY 2026

CITY OF HOUSTON
HOUSTON PUBLIC WORKS

SCOTT STREET NO. 1 LIFT STATION REHABILITATION

STRUCTURAL

WET WEATHER LIFT STATION WALKWAY PLATFORM GRATING PLAN

WBS NUMBER
R-000267-127A-4
DRAWING SCALE
AS NOTED
CITY OF HOUSTON PM
TAHA LOTIA
DWG NO. 2-S-2
SHEET NO. 112 OF 220

FOR CITY OF HOUSTON USE ONLY

K:\00050\00050-0099-01 Scott St. No. 1 Lift Station Rehabilitation - Phase II Design\2 Design Phase\CAD\S-A2-WET WEATHER LS.dwg

ORIGINAL SCALE IN INCHES FOR REDUCED PLANS

NO.	DATE	REVISIONS	APP.

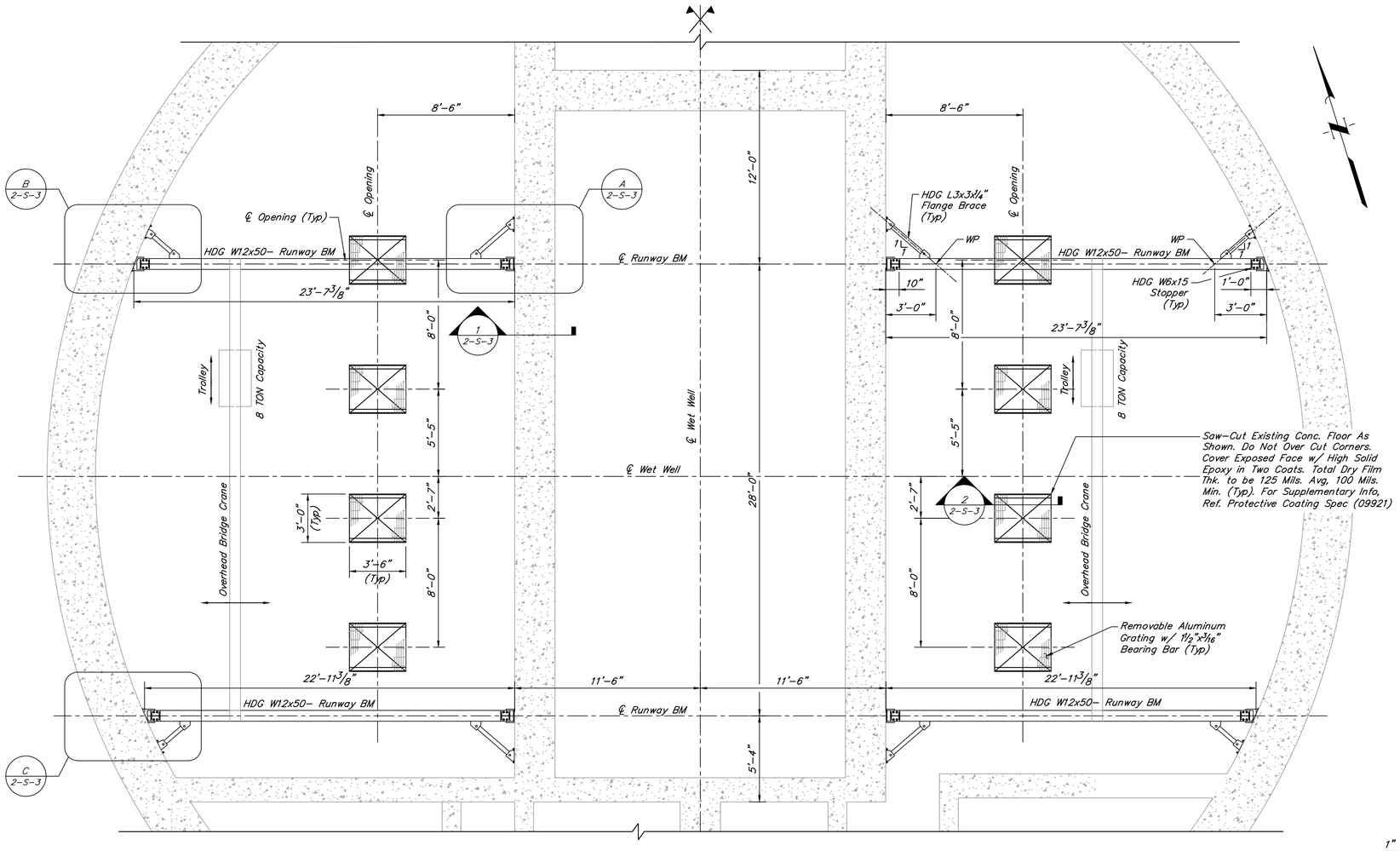

OVERHEAD CRANE–RUNWAY BEAMS
1/4" = 1'–0"

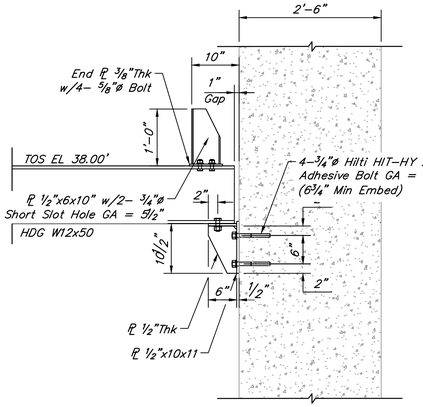

SECTION 1–1
SCALE: 3/4" = 1'–0"

NOTES:

1. All proposed grating and handrails shall be made of aluminum powder–coated dark green.
2. All crane support misc. steel to be HDG, unless noted otherwise.
3. Upon installation, startup, and certification, contractor shall test crane for 100% of load capacity.

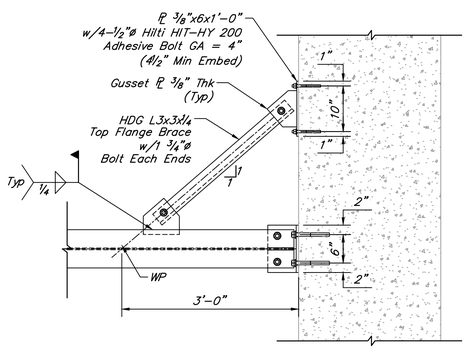

DETAIL A
STOPPER NOT SHOWN FOR CLARITY
SCALE: 3/4" = 1'–0"

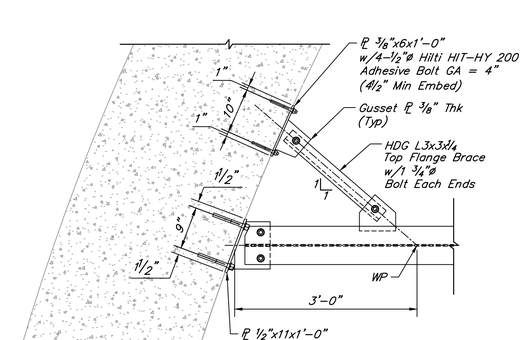

DETAIL B
STOPPER NOT SHOWN FOR CLARITY
SCALE: 3/4" = 1'–0"

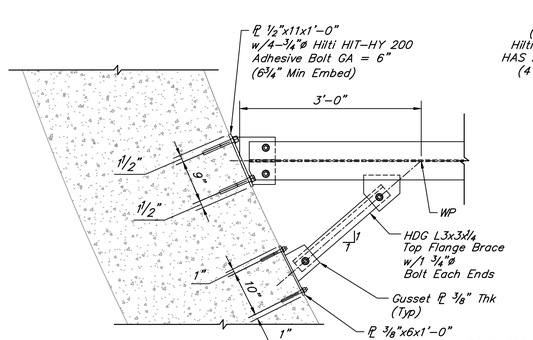

DETAIL C
STOPPER NOT SHOWN FOR CLARITY
SCALE: 3/4" = 1'–0"

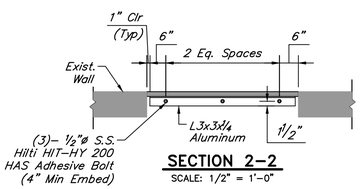

SECTION 2–2
SCALE: 1/2" = 1'–0"

QUIDDITY
Texas Board of Professional Engineers and Land Surveyors Reg. No. F-23290
6330 West Loop South, Suite 150 • Bellaire, TX 77401 • 713.777.5337

JOB NO: 00050–0099–01 DATE: 1/19/2026

APPROVED BY:
DATE: MAY 2026
DESIGNED BY: FFOROUZANNIA
DRAWN BY: SFUENTES
SURVEYED BY:
FB NO. XXXXXX

INTERIM REVIEW
Not intended for construction, bidding or permit purposes.
Engineer: AHMAD DANESHVAR, P.E.
P.E. Serial No.: 132679
Date: MAY 2026

CITY OF HOUSTON
HOUSTON PUBLIC WORKS

SCOTT STREET NO. 1 LIFT STATION REHABILITATION
STRUCTURAL

WET WEATHER LIFT STATION OVERHEAD CRANE–RUNWAY BEAMS

WBS NUMBER	FOR CITY OF HOUSTON USE ONLY
R–000267–127A–4	
DRAWING SCALE	
AS NOTED	
CITY OF HOUSTON PM	
TAHA LOTIA	
DWG NO. 2–S–3	
SHEET NO. 113 OF 220	

K:\00050\00050-0099-01 Scott St. No. 1 Lift Station Rehabilitation - Phase II Design\2 Design Phase\CAD\S-A2-WET WEATHER LS.dwg

ORIGINAL SCALE IN INCHES FOR REDUCED PLANS

NO.	DATE	REVISIONS	APP.

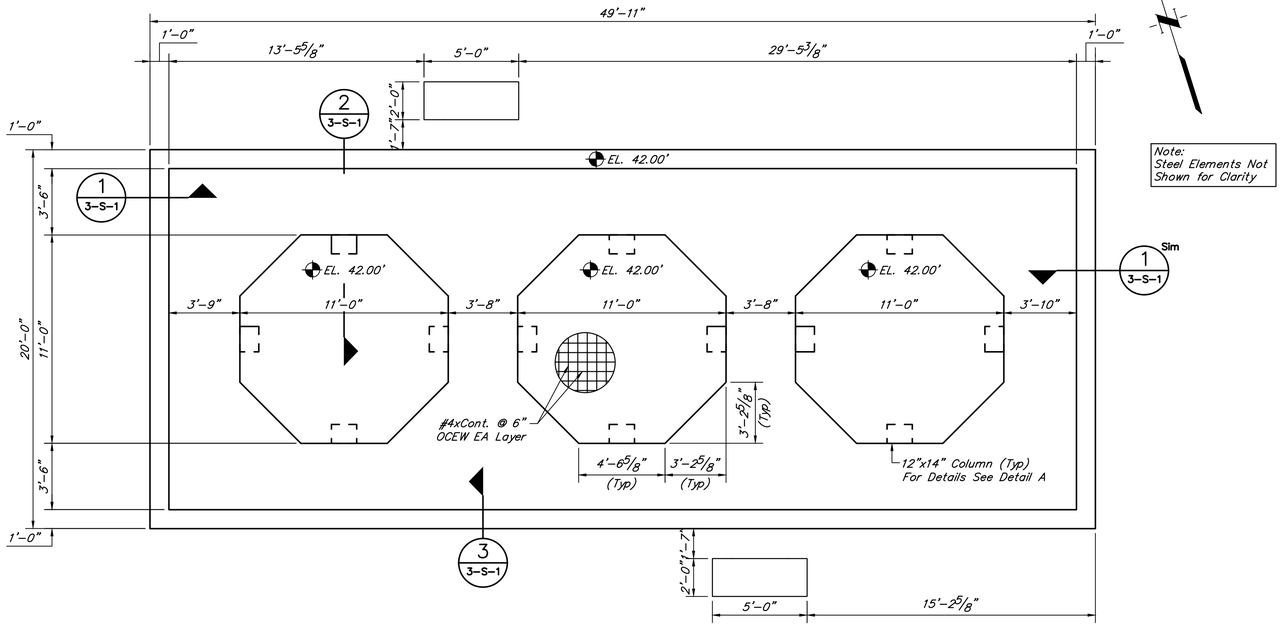

Note:
Steel Elements Not Shown for Clarity

CONCRETE TOP OF WALL PLAN
SCALE: 1/4" = 1'-0"

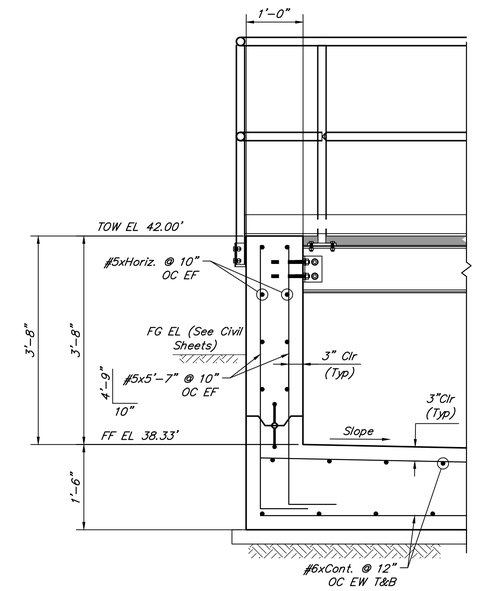

SECTION 3-3
SCALE: 3/4" = 1'-0"

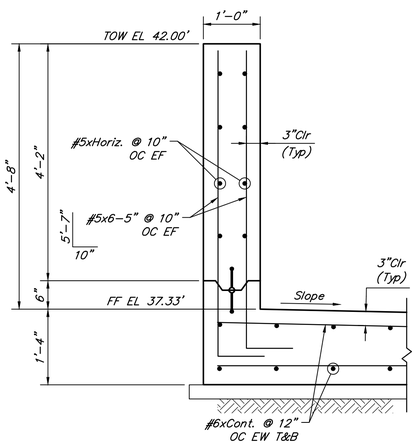

SECTION 1-1
SCALE: 3/4" = 1'-0"

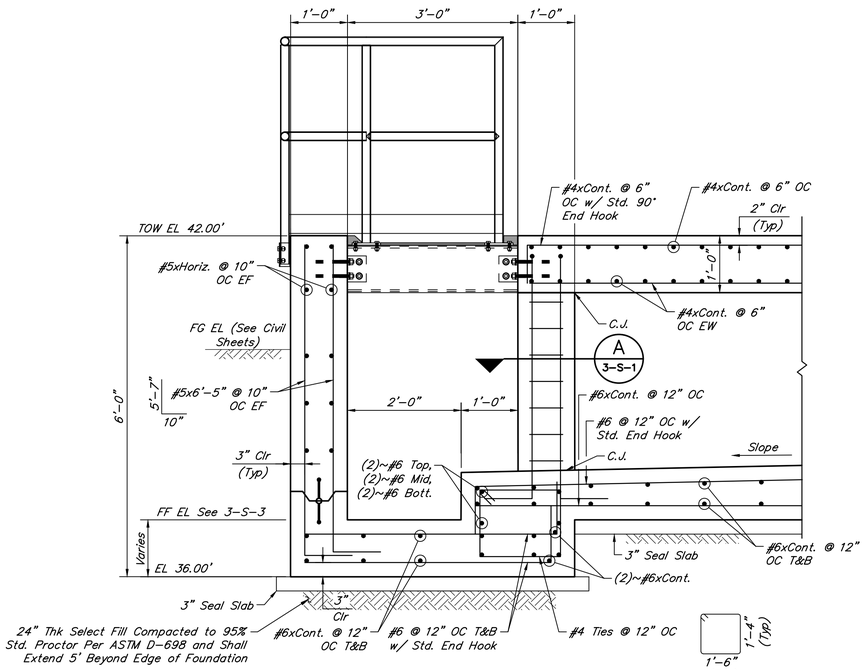

SECTION 2-2
SCALE: 3/4" = 1'-0"

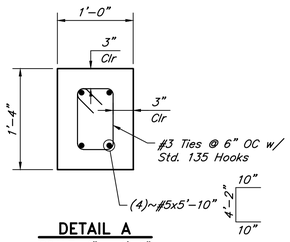

DETAIL A
SCALE: 1" = 1'-0"

QUIDDITY
Texas Board of Professional Engineers and Land Surveyors Reg. No. F-23290
6330 West Loop South, Suite 150 • Bellaire, TX 77401 • 713.777.5337

JOB NO: 00050-0099-01 DATE: 1/19/2026

APPROVED BY:

DATE: MAY 2026

DESIGNED BY: JTREVINO

DRAWN BY: ASALGADO

SURVEYED BY:

FB NO. XXXXXX

INTERIM REVIEW
Not intended for construction, bidding or permit purposes.
Engineer: AHMAD DANESHVAR, P.E.
P.E. Serial No.: 132679
Date: MAY 2026

CITY OF HOUSTON
HOUSTON PUBLIC WORKS

SCOTT STREET NO. 1
LIFT STATION REHABILITATION
STRUCTURAL

CHEMICAL STORAGE
TOP VIEW PLAN & SECTIONS

WBS NUMBER	FOR CITY OF HOUSTON USE ONLY
R-000267-127A-4	
DRAWING SCALE	
AS NOTED	
CITY OF HOUSTON PM	
TAHA LOTIA	
DWG NO. 3-S-1	
SHEET NO. 114 OF 220	

K:\00050\00050-0099-01 Scott St. No. 1 Lift Station Rehabilitation - Phase II Design\2 Design Phase\CAD\S-A3-CHEMICAL STORAGE.dwg

0 1 2 3 4 5 ORIGINAL SCALE IN INCHES FOR REDUCED PLANS

NO.	DATE	REVISIONS	APP.

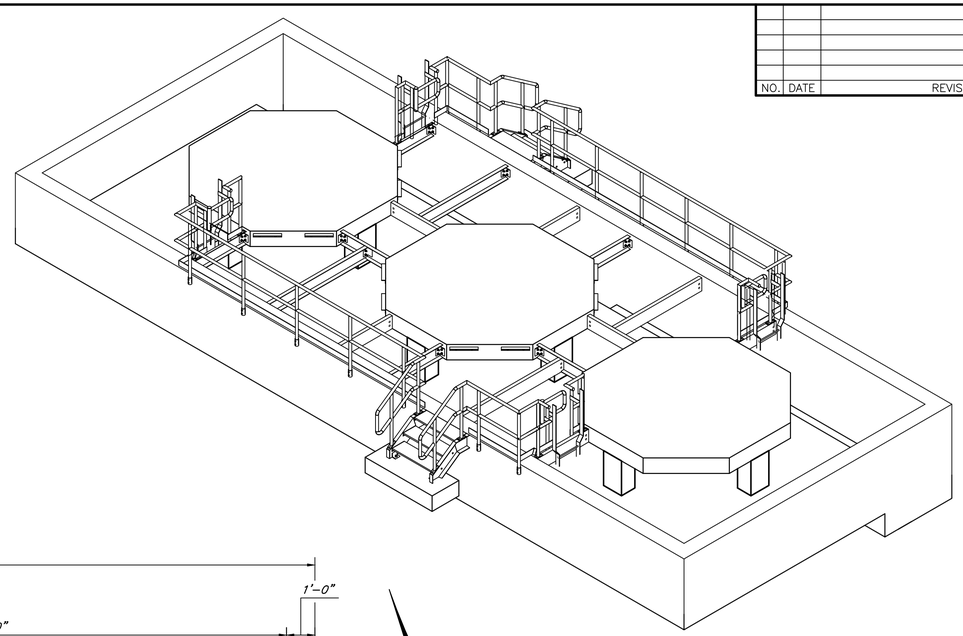

3D VIEW
SCALE: 1/4" = 1'-0"

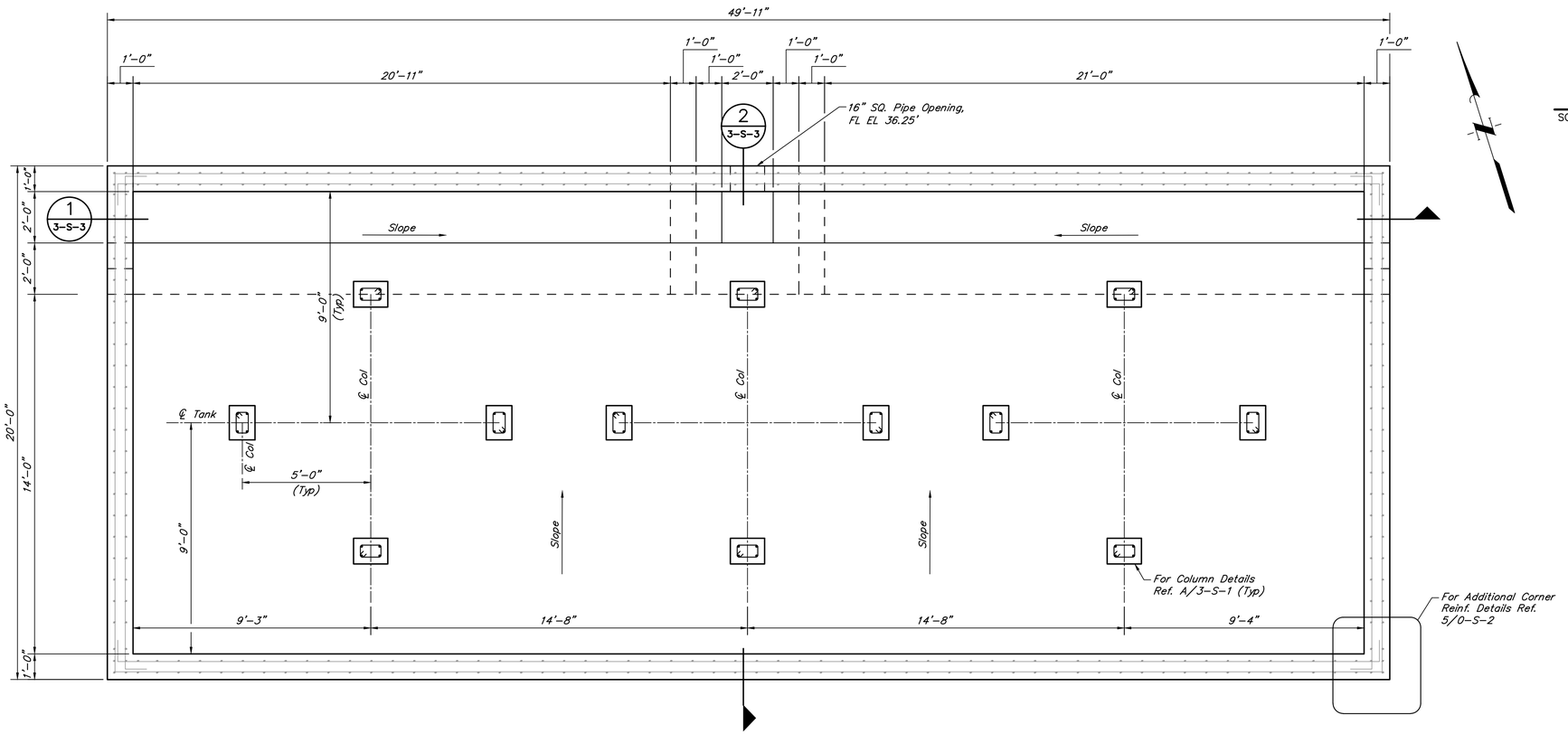

FOUNDATION PLAN
SCALE: 3/8" = 1'-0"

QUIDDITY
Texas Board of Professional Engineers and Land Surveyors Reg. No. F-23290
6330 West Loop South, Suite 150 • Bellaire, TX 77401 • 713.777.5337

JOB NO: 00050-0099-01 DATE: 1/19/2026

APPROVED BY:

DATE: MAY 2026

DESIGNED BY: JTREVINO

DRAWN BY: ASALGADO

SURVEYED BY:

FB NO. XXXXXX

INTERIM REVIEW
Not intended for construction, bidding or permit purposes.
Engineer: AHMAD DANESHVAR, P.E.
P.E. Serial No.: 132679
Date: MAY 2026

CITY OF HOUSTON
HOUSTON PUBLIC WORKS

SCOTT STREET NO. 1 LIFT STATION REHABILITATION
STRUCTURAL
CHEMICAL STORAGE & CHEMICAL BUILDING PAD FOUNDATION PLAN & 3D VIEW

WBS NUMBER	FOR CITY OF HOUSTON USE ONLY
R-000267-127A-4	
DRAWING SCALE	
AS NOTED	
CITY OF HOUSTON PM	
TAHA LOTIA	
DWG NO. 3-S-2	
SHEET NO. 115 OF 220	

K:\00050\00050-0099-01 Scott St. No. 1 Lift Station Rehabilitation - Phase II Design\2 Design Phase\CAD\S-A3-CHEMICAL STORAGE.dwg

ORIGINAL SCALE IN INCHES FOR REDUCED PLANS

NO.	DATE	REVISIONS	APP.

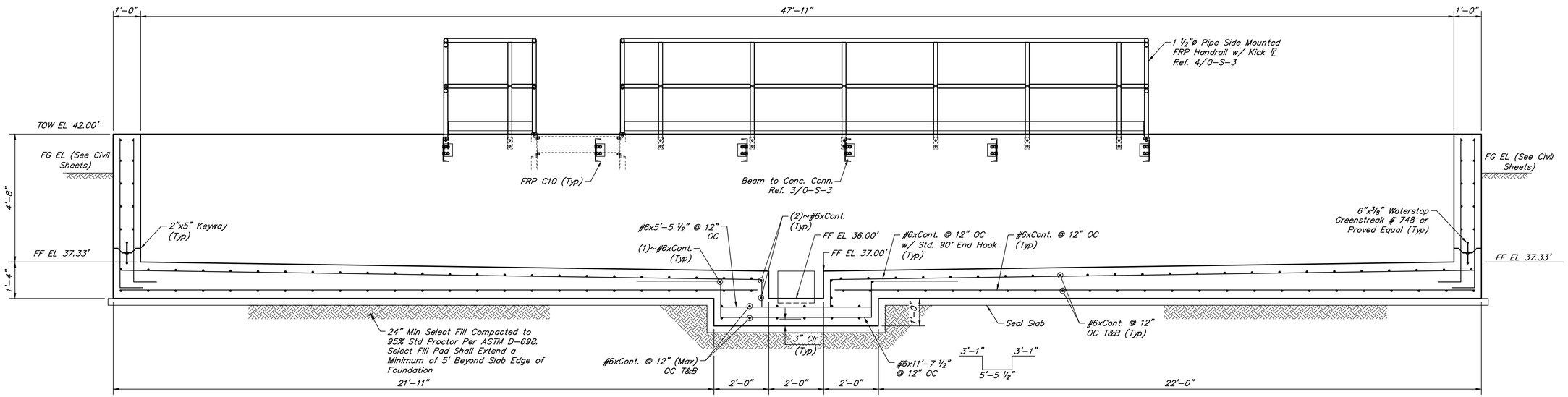

SECTION 1-1
SCALE: 1/2" = 1'-0"

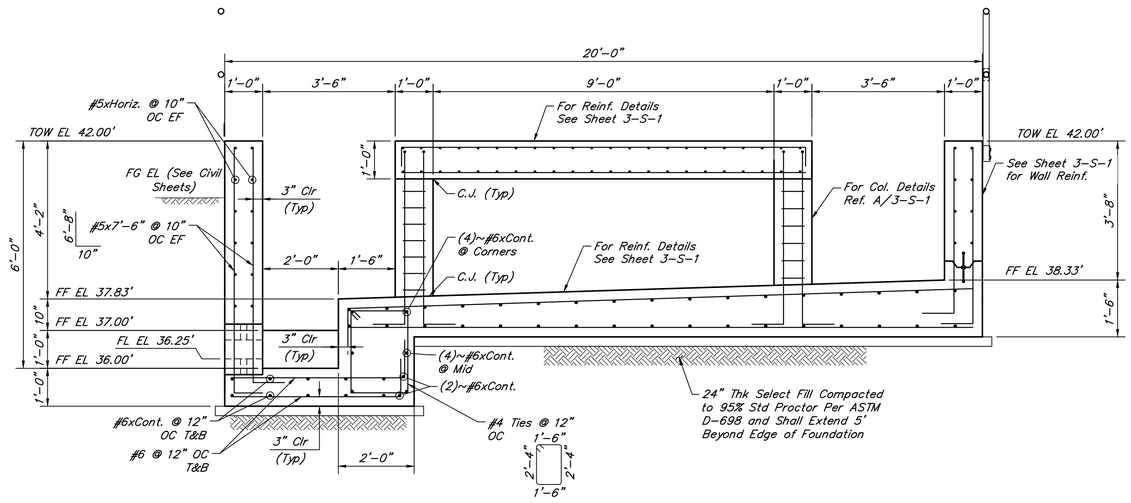

SECTION 2-2
SCALE: 1/2" = 1'-0"

QUIDDITY
Texas Board of Professional Engineers and Land Surveyors Reg. No. F-23290
6330 West Loop South, Suite 150 • Bellaire, TX 77401 • 713.777.5337

JOB NO: 00050-0099-01 DATE: 1/19/2026

APPROVED BY:

DATE: MAY 2026

DESIGNED BY: JTREVINO

DRAWN BY: ASALGADO

SURVEYED BY:

FB NO. XXXXXX

INTERIM REVIEW
Not intended for construction, bidding or permit purposes.
Engineer: AHMAD DANESHVAR, P.E.
P.E. Serial No.: 132679
Date: MAY 2026

CITY OF HOUSTON
HOUSTON PUBLIC WORKS

SCOTT STREET NO. 1 LIFT STATION REHABILITATION

STRUCTURAL

CHEMICAL STORAGE & CHEMICAL BUILDING PAD FOUNDATION SECTIONS

WBS NUMBER	FOR CITY OF HOUSTON USE ONLY
R-000267-127A-4	
DRAWING SCALE	
AS NOTED	
CITY OF HOUSTON PM	
TAHA LOTIA	
DWG NO. 3-S-3	
SHEET NO. 116 OF 220	

K:\00050\00050-0099-01 Scott St. No. 1 Lift Station Rehabilitation - Phase II Design\2 Design Phase\CAD\S-A3-CHEMICAL STORAGE.dwg

ORIGINAL SCALE IN INCHES FOR REDUCED PLANS

NO.	DATE	REVISIONS	APP.

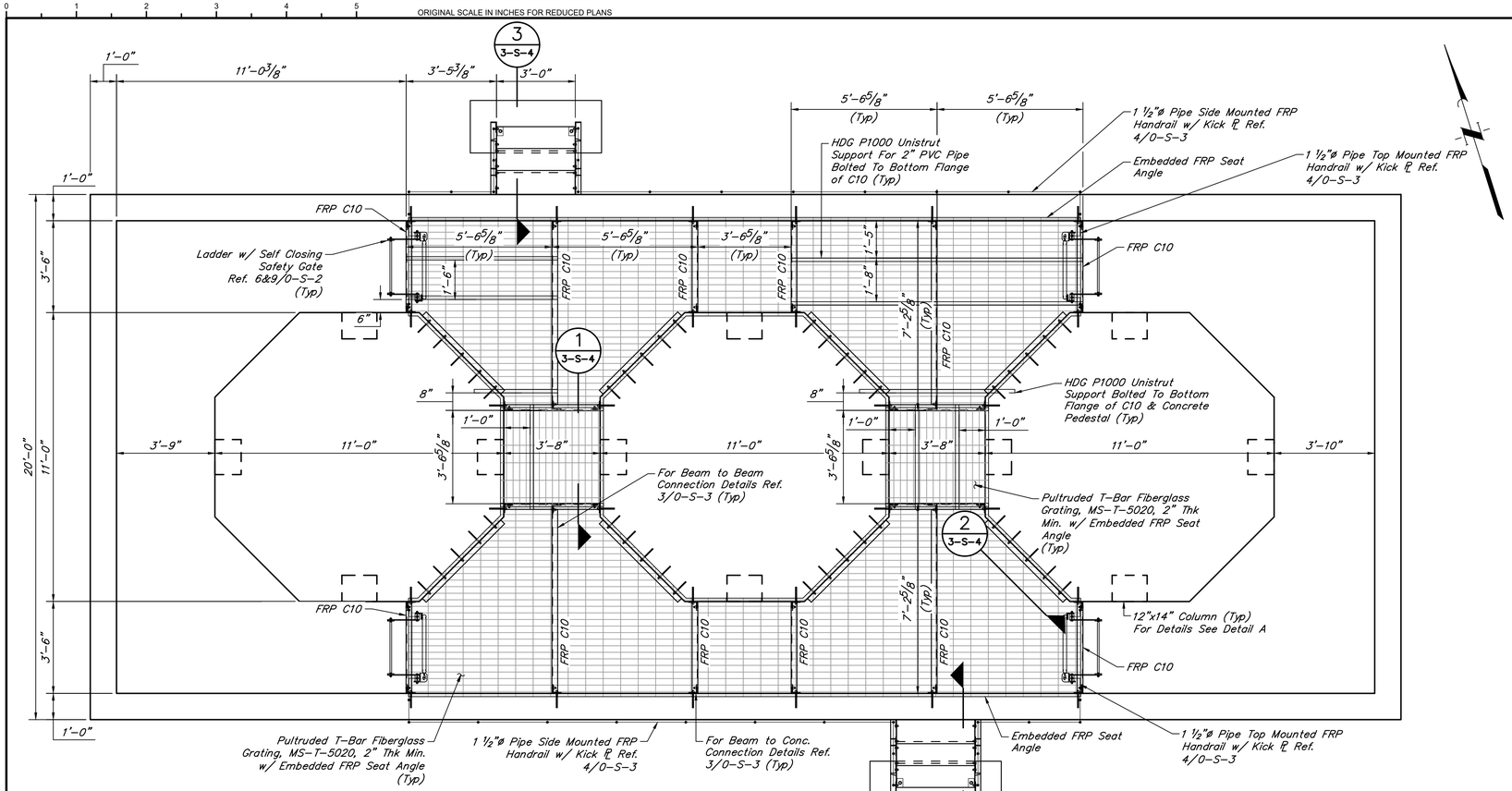

GRATING PLAN
SCALE: 3/8" = 1'-0"

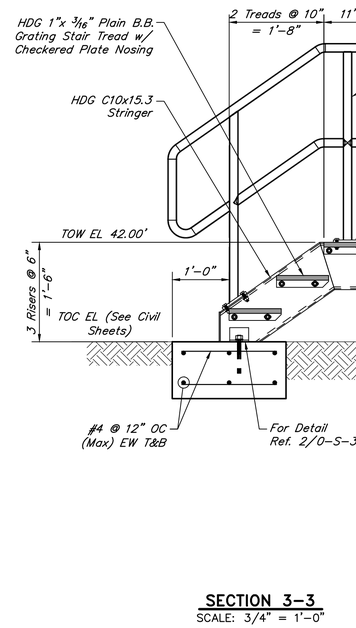

SECTION 3-3
SCALE: 3/4" = 1'-0"

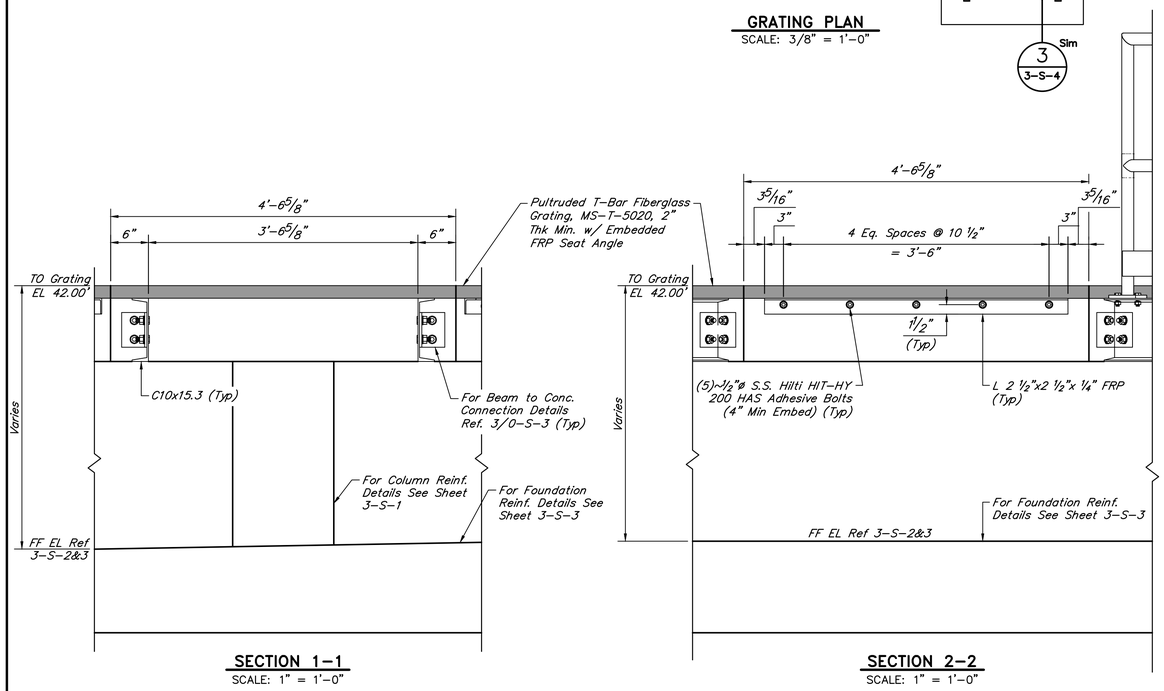

SECTION 1-1
SCALE: 1" = 1'-0"

SECTION 2-2
SCALE: 1" = 1'-0"

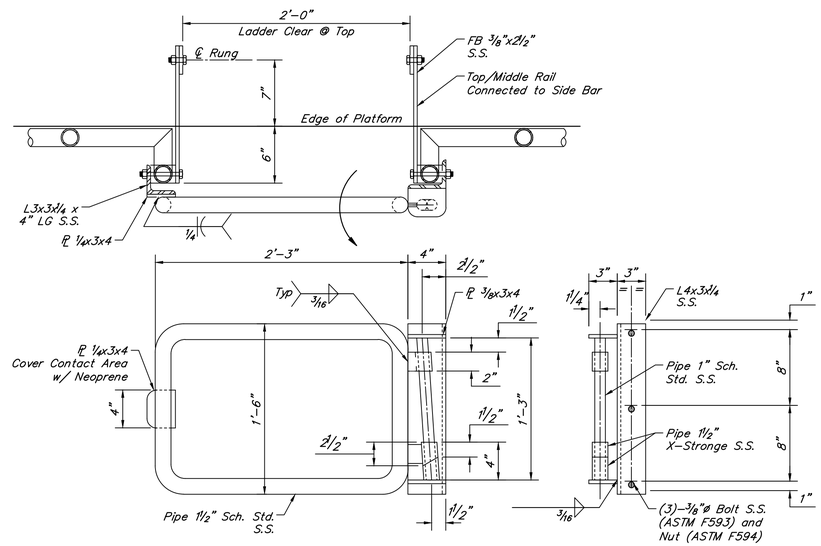

SELF CLOSING SAFETY GATE
SCALE: 1 1/2" = 1'-0"
(ALL MATERIALS TO BE S.S. TYPE 316)

QUIDDITY
Texas Board of Professional Engineers and Land Surveyors Reg. No. F-23290
6330 West Loop South, Suite 150 • Bellaire, TX 77401 • 713.777.5337

JOB NO: 00050-0099-01 DATE: 1/19/2026

APPROVED BY:

DATE: MAY 2026

DESIGNED BY: JTREVINO

DRAWN BY: ASALGADO

SURVEYED BY:

FB NO. XXXXXX

INTERIM REVIEW
Not intended for construction, bidding or permit purposes.
Engineer: AHMAD DANESHVAR, P.E.
P.E. Serial No.: 132679
Date: MAY 2026

CITY OF HOUSTON
HOUSTON PUBLIC WORKS

SCOTT STREET NO. 1
LIFT STATION REHABILITATION
STRUCTURAL

CHEMICAL STORAGE
GRATING PLAN & SECTIONS

WBS NUMBER	FOR CITY OF HOUSTON USE ONLY
R-000267-127A-4	
DRAWING SCALE	
AS NOTED	
CITY OF HOUSTON PM	
TAHA LOTIA	
DWG NO. 3-S-4	
SHEET NO. 117 OF 220	

K:\00050\00050-0099-01 Scott St. No. 1 Lift Station Rehabilitation - Phase II Design\2 Design Phase\CAD\S-A3-CHEMICAL STORAGE.dwg

ORIGINAL SCALE IN INCHES FOR REDUCED PLANS

NO.	DATE	REVISIONS	APP.

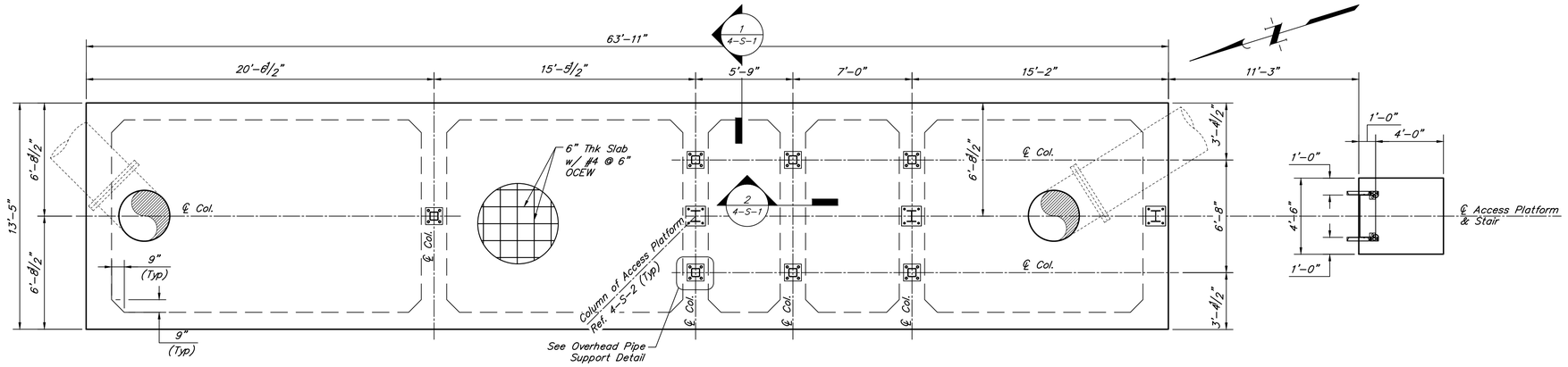

FOUNDATION PLAN
SCALE: 1/4" = 1'-0"

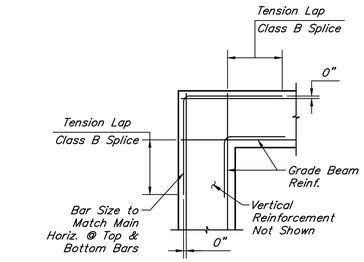

GRADE BEAM CORNER DETAILS
SCALE: 3/4" = 1'-0"

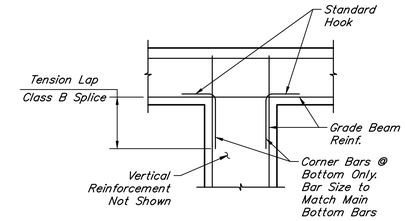

GRADE BEAM INTERSECTION DETAILS
SCALE: 1/2" = 1'-0"

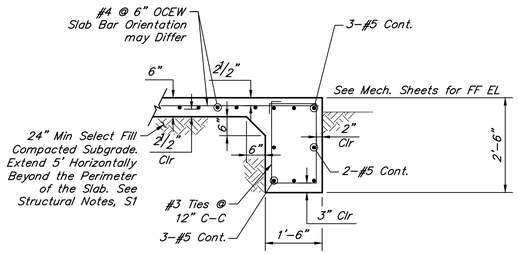

SECTION 1-1
SCALE: 1/2" = 1'-0"
Vertical Wall Reinforcement not Shown for Clarity

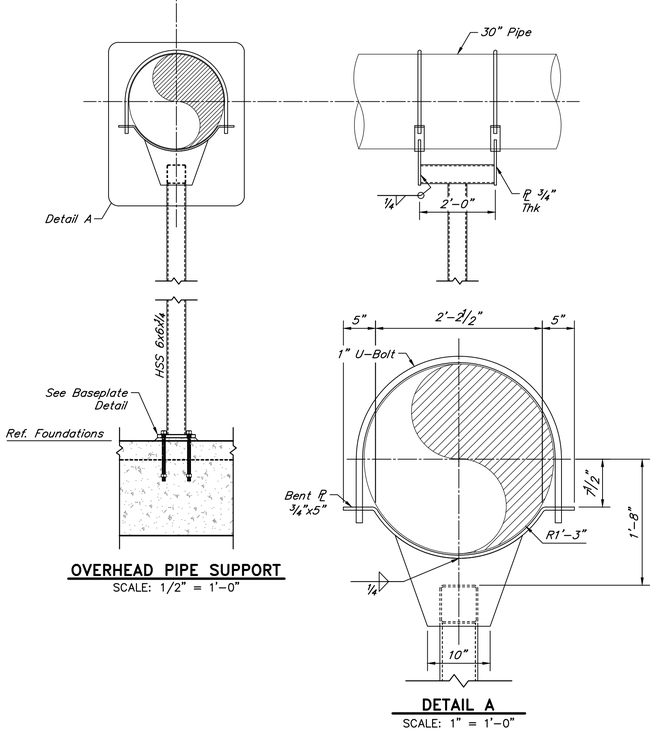

OVERHEAD PIPE SUPPORT
SCALE: 1/2" = 1'-0"

DETAIL A
SCALE: 1" = 1'-0"

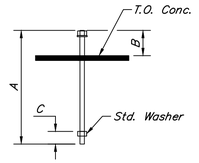

(TYP) ANCHOR RODS
NOT TO SCALE

ANC. ROD SCHEDULE TYP			
DIAMETER	A	B	C
1"	24"	5"	3"

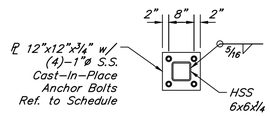

BASEPLATE DETAIL
SCALE: 1/2" = 1'-0"

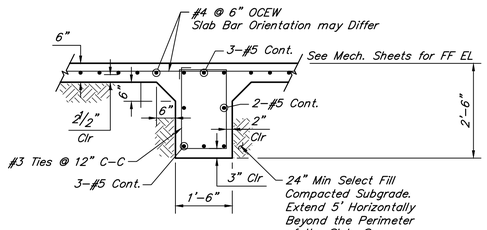

SECTION 2-2
SCALE: 1/2" = 1'-0"
Wall Details not Shown for Clarity

QUIDDITY
Texas Board of Professional Engineers and Land Surveyors Reg. No. F-23290
6330 West Loop South, Suite 150 • Bellaire, TX 77401 • 713.777.5337

JOB NO: 00050-0099-01 DATE: 1/19/2026

APPROVED BY:

DATE: MAY 2026

DESIGNED BY: RMERHI

DRAWN BY: SFUENTES

SURVEYED BY:

FB NO. XXXXX

INTERIM REVIEW
Not intended for construction, bidding or permit purposes.
Engineer: AHMAD DANESHVAR, P.E.
P.E. Serial No.: 132679
Date: MAY 2026

CITY OF HOUSTON
HOUSTON PUBLIC WORKS

SCOTT STREET NO. 1 LIFT STATION REHABILITATION
STRUCTURAL

WET WEATHER LIFT STATION FLOW METER STATION FOUNDATION PLAN AND SECTIONS

WBS NUMBER	FOR CITY OF HOUSTON USE ONLY
R-000267-127A-4	
DRAWING SCALE	
AS NOTED	
CITY OF HOUSTON PM	
TAHA LOTIA	
DWG NO. 4-S-1	
SHEET NO. 118 OF 220	

K:\00050\00050-0099-01 Scott St. No. 1 Lift Station Rehabilitation - Phase II Design\2 Design Phase\CAD\S-A4-WW LIFT STA FLOW METER STA.dwg

ORIGINAL SCALE IN INCHES FOR REDUCED PLANS

NO.	DATE	REVISIONS	APP.

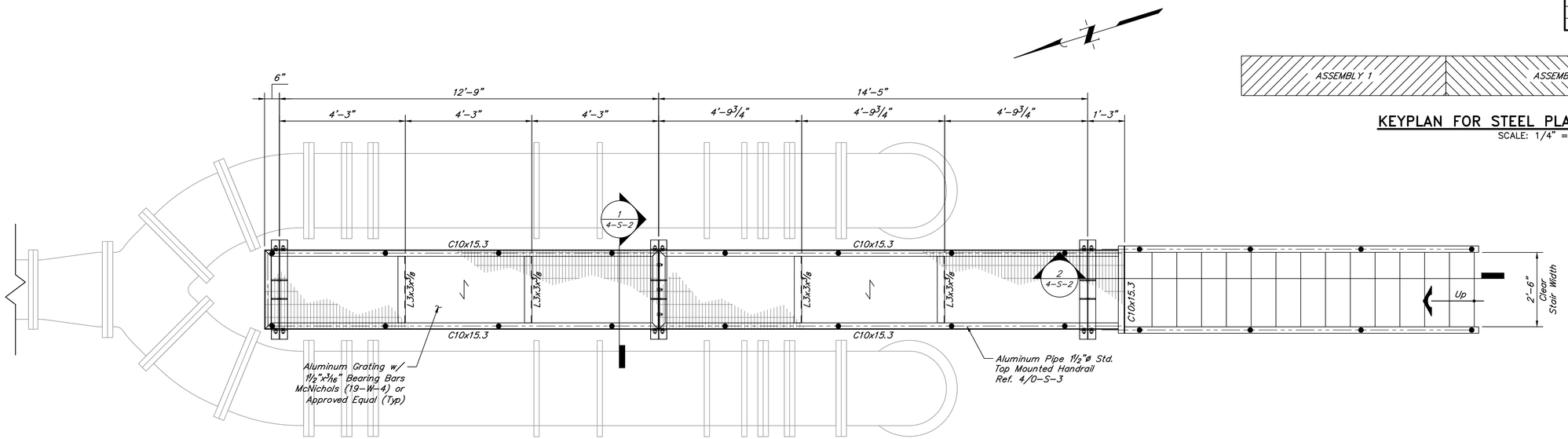

GRATING PLAN
SCALE: 1/2" = 1'-0"

KEYPLAN FOR STEEL PLATFORM ASSEMBLIES
SCALE: 1/4" = 1'-0"

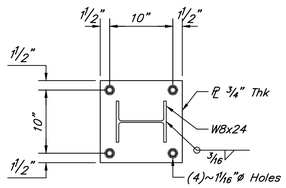

SECTION 3-3
SCALE: 1" = 1'-0"
ALL STEEL STRUCTURES EXPOSED TO THE WEATHER SHALL BE HOT DIP GALVANIZED

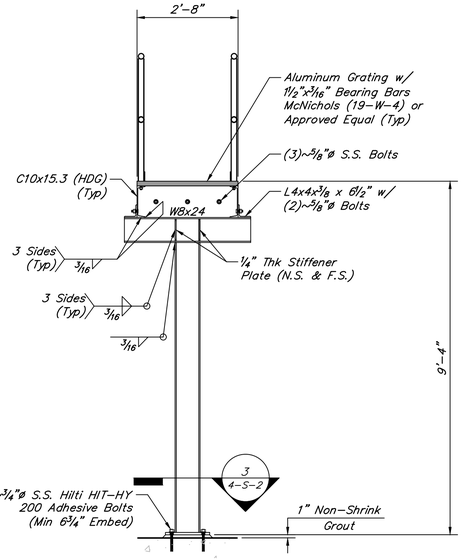

SECTION 1-1
SCALE: 1/2" = 1'-0"

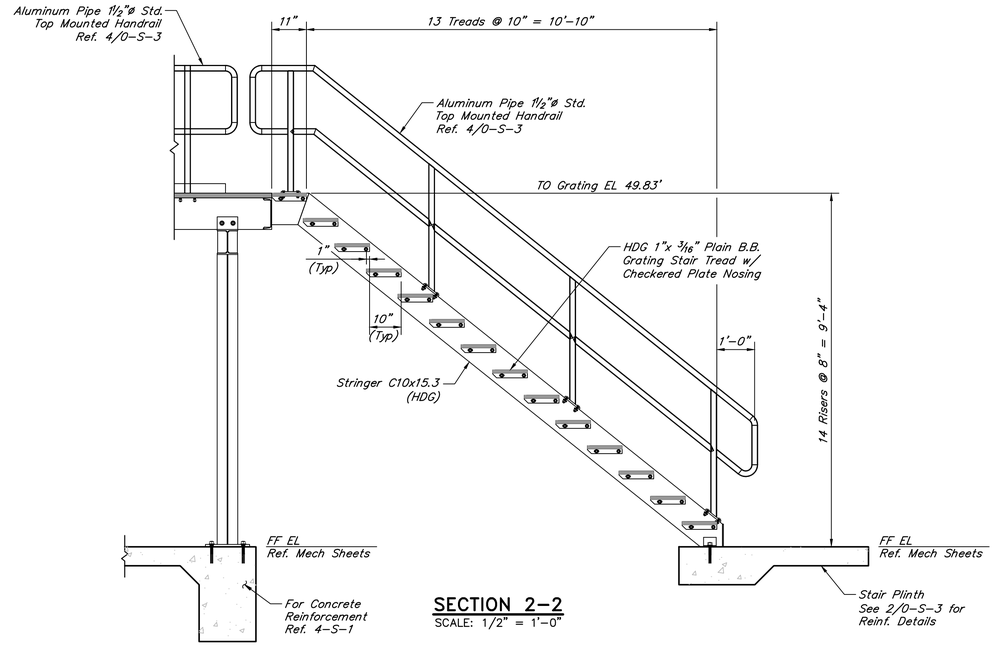

SECTION 2-2
SCALE: 1/2" = 1'-0"

QUIDDITY
Texas Board of Professional Engineers and Land Surveyors Reg. No. F-23290
6330 West Loop South, Suite 150 • Bellaire, TX 77401 • 713.777.5337

JOB NO: 00050-0099-01 DATE: 1/19/2026

APPROVED BY:

DATE: MAY 2026

DESIGNED BY: JTREVINO

DRAWN BY: ASALGADO

SURVEYED BY:

FB NO. XXXXXX

INTERIM REVIEW
Not intended for construction, bidding or permit purposes.
Engineer: AHMAD DANESHVAR, P.E.
P.E. Serial No.: 132679
Date: MAY 2026

CITY OF HOUSTON
HOUSTON PUBLIC WORKS

SCOTT STREET NO. 1 LIFT STATION REHABILITATION
STRUCTURAL

WET WEATHER LIFT STATION FLOW METER STATION STEEL WALKWAY FRAMING PLAN & SECTIONS

WBS NUMBER	FOR CITY OF HOUSTON USE ONLY
R-000267-127A-4	
DRAWING SCALE	
AS NOTED	
CITY OF HOUSTON PM	
TAHA LOTIA	
DWG NO. 4-S-2	
SHEET NO. 119 OF 220	

K:\00050\00050-0099-01 Scott St. No. 1 Lift Station Rehabilitation - Phase II Design\2 Design Phase\CAD\S-A4-WW LIFT STA FLOW METER STA.dwg

ORIGINAL SCALE IN INCHES FOR REDUCED PLANS

NO.	DATE	REVISIONS	APP.

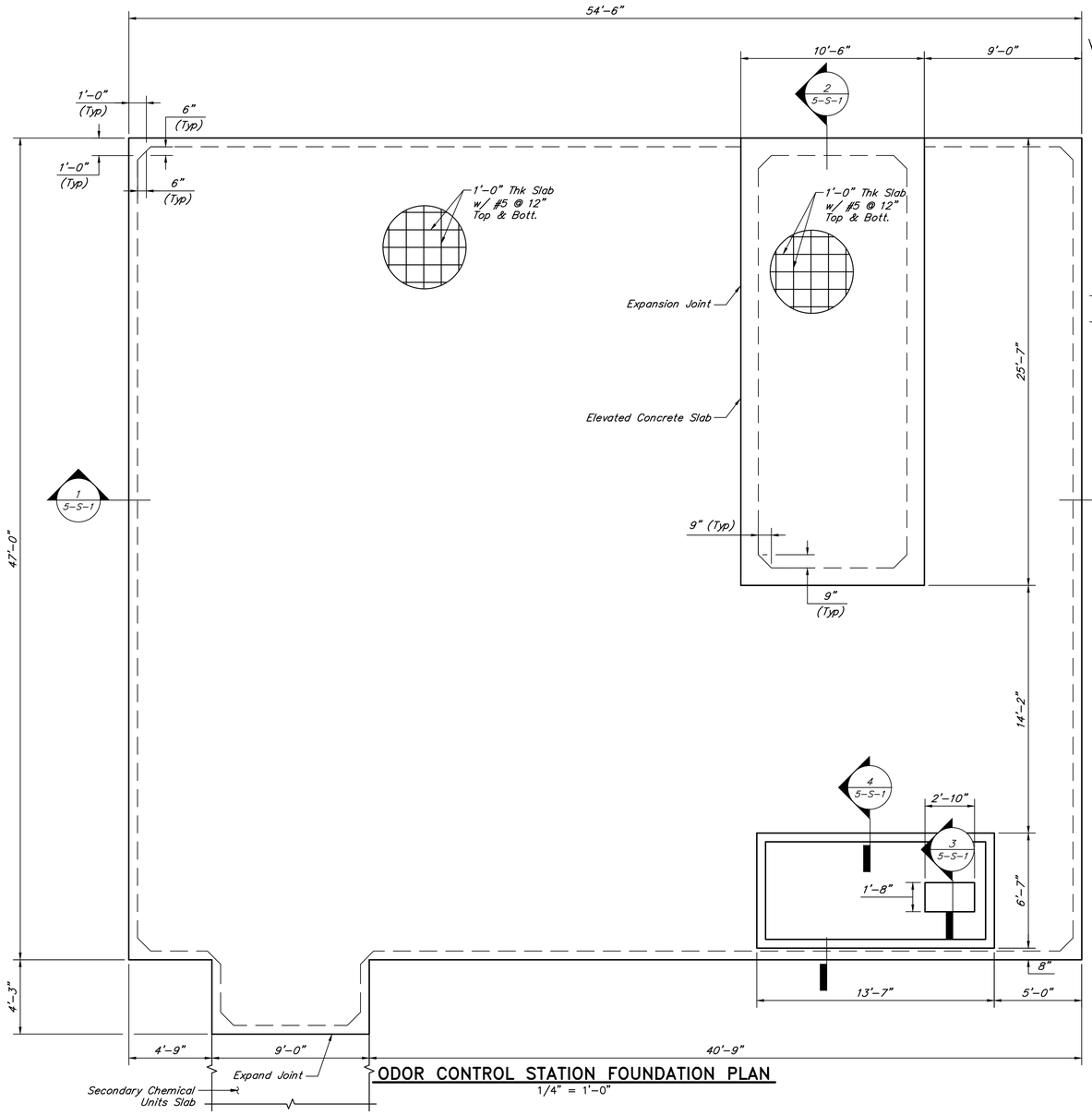

ODOR CONTROL STATION FOUNDATION PLAN
1/4" = 1'-0"

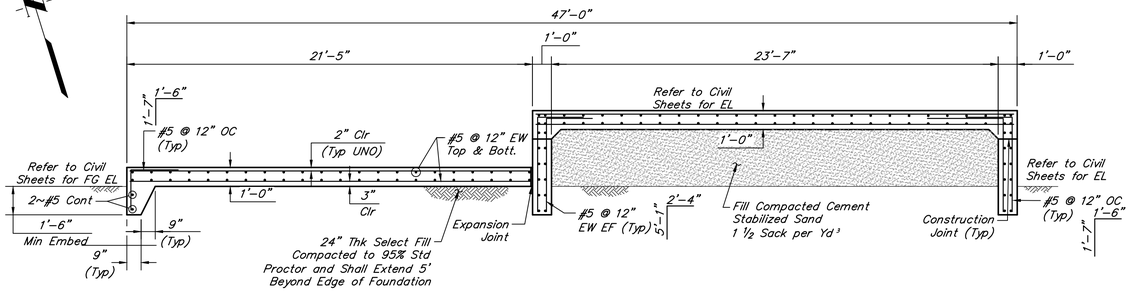

SECTION 2-2
1/4" = 1'-0"

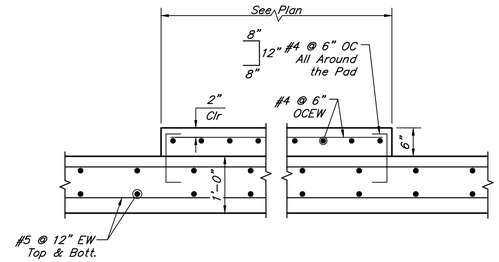

SECTION 3-3
SCALE: 3/4" = 1'-0"

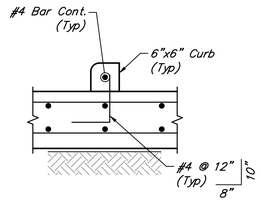

SECTION 4-4
SCALE: 3/4" = 1'-0"

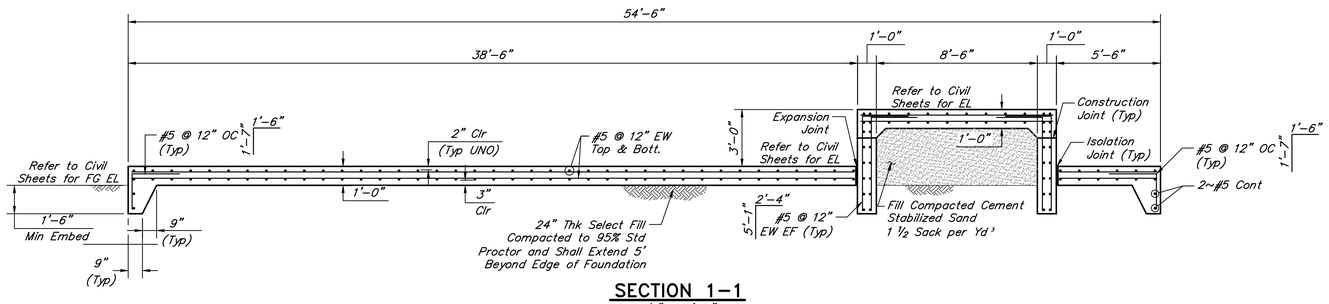

SECTION 1-1
1/4" = 1'-0"

K:\00050\00050-0099-01 Scott St. No. 1 Lift Station Rehabilitation - Phase II Design\2 Design Phase\CAD\S-A5-ODOR CNTR STA.dwg

QUIDDITY
Texas Board of Professional Engineers and Land Surveyors Reg. No. F-23290
6330 West Loop South, Suite 150 • Bellaire, TX 77401 • 713.777.5337

JOB NO: 00050-0099-01 DATE: 1/19/2026

APPROVED BY:

DATE: MAY 2026

DESIGNED BY: RMERHI

DRAWN BY: SFUENTES

SURVEYED BY:

FB NO. XXXXXX

INTERIM REVIEW
Not intended for construction, bidding or permit purposes.
Engineer: AHMAD DANESHVAR, P.E.
P.E. Serial No.: 132679
Date: MAY 2026

CITY OF HOUSTON
HOUSTON PUBLIC WORKS

SCOTT STREET NO. 1 LIFT STATION REHABILITATION
STRUCTURAL
ODOR CONTROL STATION FOUNDATION PLAN & SECTIONS

WBS NUMBER	FOR CITY OF HOUSTON USE ONLY
R-000267-127A-4	
DRAWING SCALE	
AS NOTED	
CITY OF HOUSTON PM	
TAHA LOTIA	
DWG NO. 5-S-1	
SHEET NO. 120 OF 220	

0 1 2 3 4 5 ORIGINAL SCALE IN INCHES FOR REDUCED PLANS

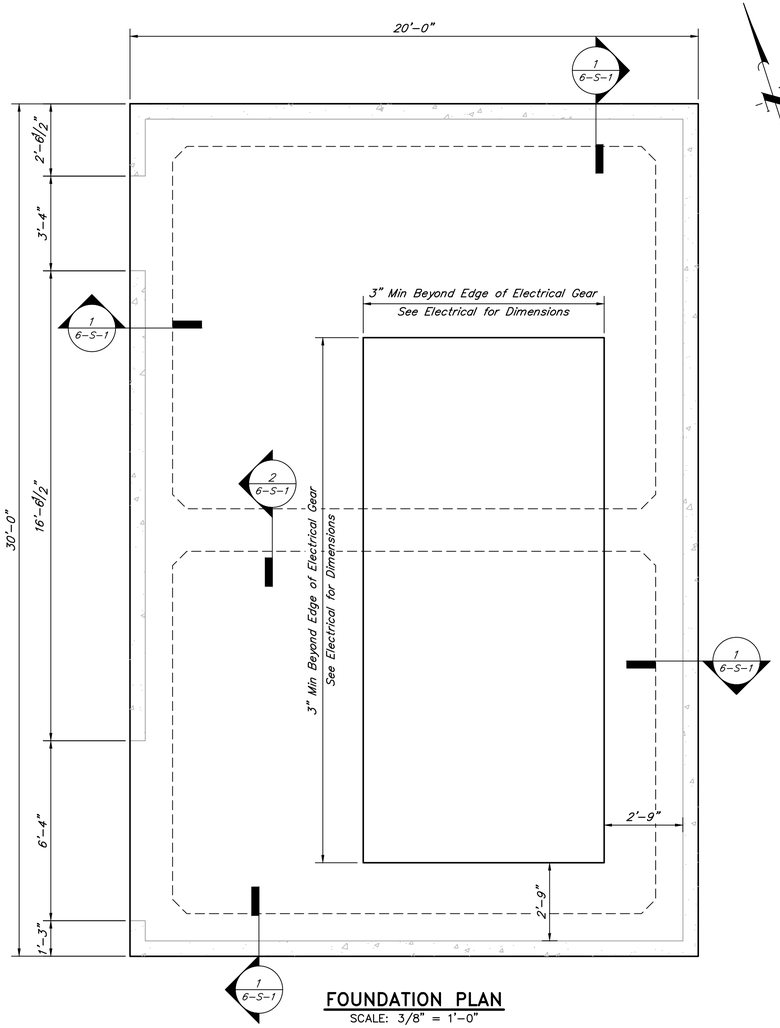

FOUNDATION PLAN
SCALE: 3/8" = 1'-0"

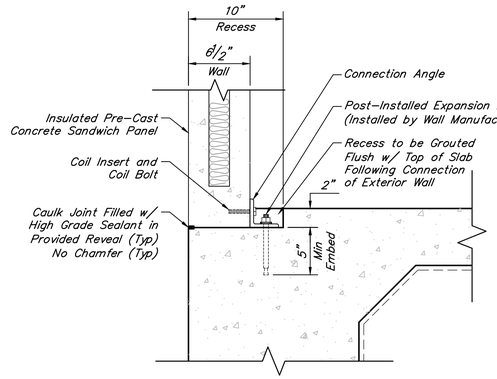

DETAIL A
SCALE: 1 1/2" = 1'-0"
SLAB REINFORCEMENT NOT SHOWN FOR CLARITY

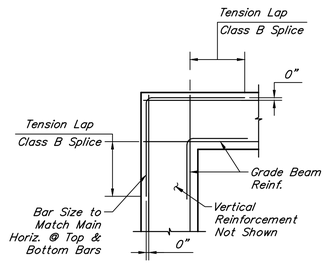

GRADE BEAM CORNER DETAILS
SCALE: 3/4" = 1'-0"

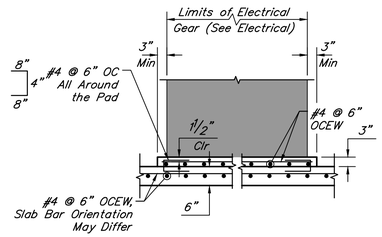

HOUSEKEEPING PAD DETAIL
SCALE: 1/2" = 1'-0"

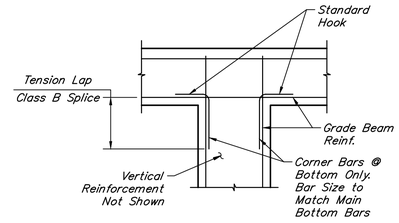

GRADE BEAM INTERSECTION DETAILS
SCALE: 1/2" = 1'-0"

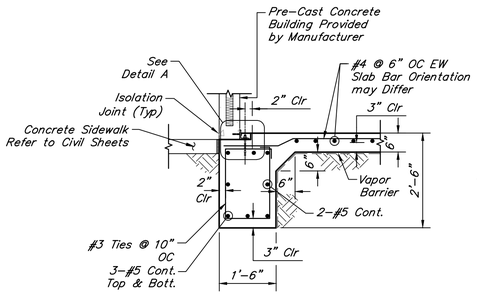

SECTION 1-1
SCALE: 1/2" = 1'-0"

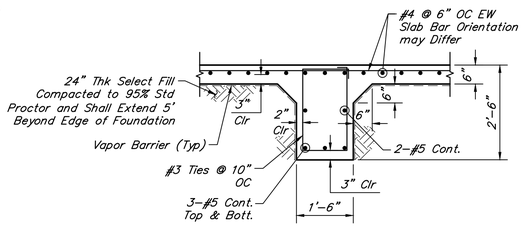

SECTION 2-2
SCALE: 3/4" = 1'-0"

NO.	DATE	REVISIONS	APP.

BUILDING NOTES:

BUILDING CODE:

1. *2021 Edition of the International building code.*
2. *ASCE-7, Minimum design loads for buildings and other structures.*
3. *Proposed building category: U*
   a. *Type of construction: III-B*
   b. *Allowable No. of stories: 2 -Actual: 1 -50%*
   c. *Allowable building area: 9,500 sf -Actual: 600 SF -7.06%*
   d. *Allowable building height: 55 ft -Actual: 14 ft -25.4%*
4. *Risk category: III (Table 1604.5, Waste Water Treatment Facilities)*
5. *Fire resistance rating requirements for exterior walls:*
   a. *Fire separation (Distance - Greater than 30ft) -0 hr (Table 602)*
   b. *Rating of exterior building wall -2 hr*
6. *Maximum area of exterior wall openings:*
   a. *Unprotected, non-sprinkled-Greater than 30 ft -No-Limit (Table 705.8)*
7. *This drawing to be read in conjunction with Mechanical drawings.*

QUIDDITY
Texas Board of Professional Engineers and Land Surveyors Reg. No. F-23290
6330 West Loop South, Suite 150 • Bellaire, TX 77401 • 713.777.5337

JOB NO: 00050-0099-01 DATE: 1/19/2026

APPROVED BY:	
DATE: MAY 2026	
DESIGNED BY: RMERHI	
DRAWN BY: SFUENTES	
SURVEYED BY:	
FB NO. XXXXXX	

INTERIM REVIEW
Not intended for construction, bidding or permit purposes.
Engineer: AHMAD DANESHVAR, P.E.
P.E. Serial No.: 132679
Date: MAY 2026

CITY OF HOUSTON
HOUSTON PUBLIC WORKS

SCOTT STREET NO. 1 LIFT STATION REHABILITATION
STRUCTURAL

ELECTRICAL BUILDING NO. 2 PLAN & SECTIONS

WBS NUMBER	FOR CITY OF HOUSTON USE ONLY
R-000267-127A-4	
DRAWING SCALE	
AS NOTED	
CITY OF HOUSTON PM	
TAHA LOTIA	
DWG NO. 6-S-1	
SHEET NO. 121 OF 220	

K:\00050\00050-0099-01 Scott St. No. 1 Lift Station Rehabilitation - Phase II Design\2 Design Phase\CAD\S-A6-ELEC BLDG NO. 1.dwg

0 1 2 3 4 5 ORIGINAL SCALE IN INCHES FOR REDUCED PLANS

SYMBOLS	DESCRIPTION
52 CS	MEDIUM VOLTAGE DRAWOUT TYPE POWER CIRCUIT BREAKER CS-CONTROL SWITCH
(E.O.) TRIP FRAME	LOW VOLTAGE CIRCUIT BREAKER, 3 POLE UNLESS OTHERWISE NOTED. LSIG IF NOTED MCP IF NOTED ERMS IF NOTED
✳ OR	COMBINATION MOTOR CIRCUIT PROTECTOR AND MAGNETIC MOTOR STARTER, FULL VOLTAGE NON-REVERSING UNLESS OTHERWISE NOTED: ✳ FVR-FULL VOLTAGE REVERSING RVNR-REDUCED VOLTAGE NON-REVERSING 2S1W-TWO SPEED, ONE WINDING 2S2W-TWO SPEED, TWO WINDING
✳ OR	NON-FUSIBLE DISCONNECT SWITCH, 600 VOLT, 3 POLE ✳ AMPERE RATING NOTED IF OTHER THAN 30A
✳ OR F	FUSIBLE DISCONNECT SWITCH, 600 VOLT, 3 POLE, AMPERE RATING AND FUSE SIZE AS NOTED: ✳ AMPERE RATING NOTED IF OTHER THAN 30A FUSE RATING
MIS OR I	MOTOR ISOLATION SWITCH, HORSEPOWER RATED
	DRAWOUT TYPE EQUIPMENT OR DEVICE
	MEDIUM VOLTAGE CABLE TERMINATION
	MEDIUM VOLTAGE AIR INTERRUPTER SWITCH
	MEDIUM VOLTAGE FUSED AIR INTERRUPTER SWITCH
	MEDIUM VOLTAGE FUSED MOTOR CONTROLLER
30KVA 480V- 120/208Y K-*	TRANSFORMER, RATINGS AND CONNECTIONS AS NOTED. UNLESS OTHERWISE NOTED ON THE SINGLE LINE DIAGRAMS ALL DRY TYPE TRANSFORMERS SERVICING ADMINISTRATIVE AND LABORATORY SPACES SHALL HAVE A K FACTOR OF 13. ALL OTHER DRY TYPE TRANSFORMERS SHALL HAVE A K-4 RATING. ISOLATION TRANSFORMERS SHALL HAVE A K-20 RATING
✳ A:5	CURRENT TRANSFORMER: ✳ QUANTITY A= PRIMARY AMPERES
✳ PV-SV	POTENTIAL TRANSFORMER: ✳ QUANTITY PV= PRIMARY VOLTAGE SV= SECONDARY VOLTAGE
	GENERATOR, RATINGS AND CONNECTIONS AS NOTED
100A ATS-1 N S	TRANSFER SWITCH AUTOMATIC TRANSFER SWITCH (EG ATS-1) MANUAL TRANSFER SWITCH (EG MTS-1) "N" INDICATES NORMAL SOURCE "S" INDICATES STANDBY SOURCE 100A INDICATES CONTINUOUS CURRENT RATING
✳	VARIABLE SPEED DRIVE CONTROLLER ✳ D.C.= D.C. DRIVE CONTROLLER SCR= SILICON CONTROLLED RECTIFIER VFD= VARIABLE FREQUENCY DRIVE AFD= ADJUSTABLE FREQUENCY DRIVE ASD= ADJUSTABLE SPEED DRIVE
	VACUUM CONTACTOR
5KW OR E	UNIT HEATER - ELECTRIC HEATING COIL AND FAN
5KW OR U	UNIT HEATER - STEAM OR WATER HEATING COIL AND FAN
M	MOTOR, NUMERAL INDICATES HORSEPOWER
SPD	SURGE PROTECTION DEVICE

SYMBOLS	DESCRIPTION
VM ✳	VOLTMETER (WITH SWITCH IF 3-PHASE)
AM ✳	AMMETER (WITH SWITCH IF 3-PHASE)
*	METER ✳ WM- WATTMETER WHM- WATTHOUR METER WHDM- WATTHOUR DEMAND METER WHDR- WATTHOUR DEMAND RECORDER PF- POWER FACTOR METER RT- RUNNING TIME METER TRANSDUCER AX- CURRENT TRANSDUCER WX- WATT TRANSDUCER
#	RELAY, NO. AS INDICATED 25- SYNCHRONISM CHECK RELAY 27- UNDER VOLTAGE RELAY 38- BEARING PROTECTIVE DEVICE 40- LOSS OF EXCITATION RELAY 42- RUNNING CONTACTOR/PILOT RELAY 46- REVERSE PHASE/PHASE BALANCE/CURRENT RELAY 47- PHASE SEQUENCE VOLTAGE RELAY 49- MACHINE OR TRANSFORMER THERMAL RELAY 50- INSTANTANEOUS OVERCURRENT RELAY 50G- INSTANTANEOUS GROUND 51- TIME OVER CURRENT RELAY 51G- TIME OVERCURRENT RELAY, GROUNDING RESISTOR TYPE 51N- TIME OVERCURRENT RELAY, RESIDUAL TYPE 51V- TIME OVERCURRENT RELAY WITH VOLTAGE RESTRAINT 60- NEGATIVE SEQUENCE VOLTAGE RELAY 62- TIME DELAY RELAY 63- OVER PRESSURE RELAY 67- AC DIRECTIONAL OVERCURRENT RELAY 83- AUTOMATIC SELECTIVE CONTROL OR TRANSFER RELAY 86- LOCKING-OUT RELAY 87- DIFFERENTIAL PROTECTIVE RELAY B- SUFFIX INDICATES "BUS" G- SUFFIX INDICATES "GENERATOR" GF- GROUND FAULT ST- SHUNT TRIP T- SUFFIX INDICATES "TRANSFORMER" X- SUFFIX INDICATES "AUXILIARY"
*	SPECIAL CAPACITOR ✳ SC- SURGE CAPACITOR PF- POWER FACTOR CORRECTION CAPACITOR INCLUDING INDUCTIVE LINK AS NEEDED
	PUSH BUTTON, MOMENTARY CONTACT, SPRING RETURN, NORMALLY CLOSED
	PUSH BUTTON, MOMENTARY CONTACT, SPRING RETURN, NORMALLY OPEN
E-STOP	EMERGENCY STOP PUSH BUTTON WITH RED MUSHROOM HEAD OPERATOR (MAINTAINED CONTACT)
✳ N	STOP PUSH BUTTON WITH RED HEAD OPERATOR (MAINTAINED CONTACT) WITH LOCKABLE OPTION ✳: E-STOP ✳: STOP
START STOP	START-STOP PUSH BUTTON CONTROL STATION (MOMENTARY CONTACT) "L" DENOTES LOCKOUT TYPE
START STOP	START-STOP PUSH BUTTON CONTROL STATION, MAINTAINED CONTACT WITH LOCKOUT DEVICE ON STOP
OFF ON	OFF/ON SELECTOR SWITCH
B A C ✳ (XOO) (OOX)	3 POSITION SELECTOR SWITCH, MAINTAINED CONTACT O-OPEN X-CLOSED

POSITION	TOP CONTACT	MIDDLE CONTACT	BOTTOM CONTACT
A	X	O	O
B	0	0	O
C	0	O	X

✳ NAMEPLATE (A/B/C)
HOA- HAND/OFF/AUTO
HOR- HAND/OFF/REMOTE
LOR- LOCAL/OFF/REMOTE
RSL- RAISE/STOP/LOWER
TOA- TEST/OFF/AUTO

M#	MOTOR STARTER COIL, NUMBER AS INDICATED
CR #	CONTROL RELAY COIL, NUMBER AS INDICATED
	RVSS: REDUCED VOLTAGE SOLID STATE SOFT STARTER
	RVAT: REDUCED VOLTAGE AUTO-TRANSFORMER

SYMBOLS	DESCRIPTION
*	PILOT LIGHT, COLOR AS NOTED ✳ R- RED G- GREEN B- BLUE W- WHITE A- AMBER
* PTT	PILOT LIGHT, PUSH-TO-TEST TYPE, COLOR AS NOTED ABOVE.
TD	TIME DELAY RELAY RANGE AS NOTED SET POINT AS NOTED TDD-TIME DELAY AFTER DE-ENERGIZATION-OFF DELAY TDE-TIME DELAY AFTER ENERGIZATION-ON DELAY
	NOTC-NORMALLY OPEN, TIMED CLOSING WHEN ENERGIZED NCTO-NORMALLY CLOSED, TIMED OPENING WHEN ENERGIZED NOTO-NORMALLY OPEN, TIMED OPENING WHEN DE-ENERGIZED NCTC-NORMALLY CLOSED, TIMED CLOSING WHEN DE-ENERGIZED
⊗	FIELD INSTRUMENT, TAG NO. OR LOOP # AS INDICATED ✳INDICATES INSTRUMENT TYPE DEFINED ON LOOP SHEETS ## - INDICATES LOOP NO.
OR ⊗	LIQUID LEVEL (FLOAT) SWITCH NORMALLY OPEN, CLOSES ON RISING LEVEL NORMALLY CLOSED, OPENS ON RISING LEVEL NORMALLY OPEN, CLOSES ON DROPPING LEVEL NORMALLY CLOSED, OPENS ON DROPPING LEVEL
OR ⊗	PRESSURE OR VACUUM SWITCH NORMALLY OPEN, CLOSES ON RISING PRESSURE NORMALLY CLOSED, OPENS ON RISING PRESSURE NORMALLY OPEN, CLOSES ON DROPPING PRESSURE NORMALLY CLOSED, OPENS ON DROPPING PRESSURE
OR ⊗	TEMPERATURE SWITCH OR THERMOSTAT NORMALLY OPEN, CLOSES ON RISING TEMPERATURE NORMALLY CLOSED, OPENS ON RISING TEMPERATURE NORMALLY OPEN, CLOSES ON DROPPING TEMPERATURE NORMALLY CLOSED, OPENS ON DROPPING TEMPERATURE
OR ⊗	FLOW SWITCH (AIR, WATER, ETC.) NORMALLY OPEN, CLOSES ON INCREASED FLOW NORMALLY OPEN, CLOSES ON DROPPING FLOW NORMALLY CLOSED, OPENS ON INCREASED FLOW NORMALLY CLOSED, OPENS ON DROPPING FLOW
OR ⊗	POSITION (LIMIT) SWITCH NORMALLY OPEN NORMALLY OPEN - HELD CLOSED NORMALLY CLOSED NORMALLY CLOSED - HELD OPEN
OR ⊗	TORQUE SWITCH NORMALLY CLOSED, OPENS ON HIGH TORQUE
	CONDUCTORS OR CONDUITS CROSSING PATHS BUT NOT CONNECTED
	CONDUCTORS ELECTRICALLY CONNECTED

SYMBOLS	DESCRIPTION
LA SC	LIGHTNING ARRESTER/SURGE CAPACITOR
OR	GROUND ROD GROUND ROD TEST WELL
30A	FUSE, AMPERE RATING AS NOTED
OR HTR	HEATER
	INDUCTOR
TG	GENERATOR TACHOMETER
	CONTACT, NORMALLY OPEN (NO)
	CONTACT, NORMALLY CLOSED (NC)
	OVERLOAD RELAY HEATER
K	KEY INTERLOCK
TB	TERMINAL OR TEST BLOCK
RTD	RESISTANCE TEMPERATURE DETECTOR
VE	VIBRATION DETECTOR
DM	DAMPER MOTOR
ETM OR	ELAPSED TIME METER
MOV	MOTOR OPERATED VALVE
o	PUSH BUTTON STATION, REFER TO ELECTRICAL SCHEMATIC FOR NUMBER OF DEVICES.
J	JUNCTION BOX
P	CONDUCTOR PULL BOX
JI	4-20mA SIGNAL JUNCTION BOX
JC	CONTROL JUNCTION BOX
PB	PULL BOX
TC	TERMINATION CABINET
	REMOTE DEVICES
5	MOV WITHOUT INTEGRATED DISCONNECT
5	MOV WITH INTEGRATED DISCONNECT
	INDICATES LIMITS OF EQUIPMENT OR WIRING ENCLOSURE
MPR	(MPR) MOTOR PROTECTION RELAY

NO.	DATE	REVISIONS	APP.

KGI Kalluri Group, Inc.
TBPE Registration No. F-665
16300 Katy Freeway, Suite 172
Houston, Texas 77094
Phone: (713)-365-9288
PROJECT 4285

QUIDDITY
Texas Board of Professional Engineers and Land Surveyors Reg. No. F-23290
6330 West Loop South, Suite 150 • Bellaire, TX 77401 • 713.777.5337

JOB NO: 00050-0099-01 DATE: 5/7/2026

APPROVED BY: RK
DATE: 05/2026
DESIGNED BY: SLJ
DRAWN BY: RHW
SURVEYED BY: WESTERN GROUP CONSULTANTS
FB NO. P-6414

STATE OF TEXAS
STACY L. JORDAN
148233
LICENSED PROFESSIONAL ENGINEER
05.12.2026

CITY OF HOUSTON
HOUSTON PUBLIC WORKS

SCOTT STREET NO. 1 LIFT STATION REHABILITATION
ELECTRICAL

LEGENDS AND SYMBOLS SHEET 1

WBS NUMBER	R-000267-127A-4
DRAWING SCALE	AS NOTED
CITY OF HOUSTON PM	TAHA LOTIA
DWG NO.	O-E-01
SHEET NO.	122 OF 220

FOR CITY OF HOUSTON USE ONLY

F:\Users\KGI-StacyJordan\Kalluri Group, Inc\KGI - Documents\4285-QEL (Scott Street LS)\Drawings\Electrical\0-E-01 Legends and Symbols Sheet 1.dwg

0 1 2 3 4 5 ORIGINAL SCALE IN INCHES FOR REDUCED PLANS

SYMBOLS	DESCRIPTION
A LA-3 b	REFER TO LIGHT FIXTURE SCHEDULE FOR TYPE FIXTURE: "A"- FIXTURE TYPE "b"- CONTROLLED BY SWITCH "b" "LA-3"- CIRCUIT 3 FROM PANEL LA
b A LA-3	REFER TO LIGHT FIXTURE SCHEDULE FOR TYPE FIXTURE, NOTATIONS SAME AS ABOVE
LA-3 OR A NS A LA-3	INDICATES LIGHT FIXTURES WHICH ARE NONSWITCHED, NOTATIONS SAME AS ABOVE "NS" - NONSWITCHED
LA-3 A b	WALL MOUNTED LIGHTING FIXTURE, NOTATIONS SAME AS ABOVE
LA-3 A b	POLE MOUNTED LIGHTING FIXTURE, NOTATIONS SAME AS ABOVE
A LA-3	EMERGENCY LIGHTING BATTERY UNIT WITH TWO LAMP HEADS, NOTATIONS SAME AS ABOVE
A	REMOTE EMERGENCY ADJUSTABLE WALL LIGHTING FIXTURE WITH TWO LAMP HEADS, NOTATIONS SAME AS ABOVE
A LA-3	CEILING MOUNTED EXIT SIGN, NOTATIONS SAME AS ABOVE
A LA-3	WALL OUTLET EXIT SIGN. ARROW INDICATES DIRECTION OF EGRESS, NOTATIONS SAME AS ABOVE
	CONDUIT, EXPOSED/SURFACE MOUNTED
	CONDUIT OR DUCTBANK, CONCEALED
	CONDUIT, EXPOSED/SURFACE MOUNTED, TURNING UP
	CONDUIT, EXPOSED/SURFACE MOUNTED, TURNING DOWN
	CONDUIT STUBBED OUT AND CAPPED
	FLEXIBLE METAL CONDUIT "WHIP" (2#12, #12G, 3/4"C UNLESS OTHERWISE NOTED) FOR RECESSED LIGHTING FIXTURES AND LIQUID TIGHT MOTOR CONNECTIONS
LP#-1,3	HOMERUN, CIRCUITS 1 AND 3 RUN TO PANEL LP-1
$b	SINGLE POLE SWITCH "b"- INDICATES SWITCH LEG SHALL CONTROL LIGHT FIXTURES WITH "b" DESIGNATION
$x b	MULTI POLE SWITCH "x"- INDICATES NUMBER OF POLE "b"- NOTATIONS SAME AS ABOVE
$P b	SINGLE POLE SWITCH AND PILOT LIGHT, "b"- NOTATIONS SAME AS ABOVE
$D b	DIMMER LIGHTING CONTROL SWITCH, "b"- NOTATIONS SAME AS ABOVE
$TM b	TIME SWITCH, "b"-NOTATIONS SAME AS ABOVE
$M	MANUAL MOTOR STARTER /DISCONNECT
$OS	SINGLE POLE SWITCH WITH OCCUPANCY SENSOR
$DM	SINGLE POLE DIMMER SWITCH
$ xx	SWITCH ENCLOSURE "x"- NOTATIONS SAME AS ABOVE "b"- NOTATIONS SAME AS ABOVE "xx"- INDICATES ENCLOSURE TYPE
LC-1	LIGHTING CONTACTOR WITH NUMBER OF POLES AS INDICATED

SYMBOLS	DESCRIPTION
L*-## OR L*-##	LIGHTING PANELBOARD (TYPICAL 120V/240V OR 120V/208V)
H*-## OR H*-##	DISTRIBUTION PANELBOARD (TYPICAL 277V/480V)
LA-3	DUPLEX RECEPTACLE, 20A, 120V, 2P, 3W GFI- GROUND FAULT INTERRUPTER TYPE WP- WEATHERPROOF "LA-3"- CIRCUIT 3 FROM PANEL LA
	WELDING RECEPTACLE
	20A, 240V, 2P, 3W, RECEPTACLE
	CLASS 1, DIVISION 1, RATED TWIST LOCK RECEPTACLE, VOLTAGE AND AMPERAGE RATING AS NOTED
	SINGLE FACE, SINGLE GANG PEDESTAL WITH 20A, 120V, 2P, 3W DUPLEX RECEPTACLE, FURNISHED AND INSTALLED UNDER DIVISION 16 UNLESS OTHERWISE NOTED. * DENOTES FURNISHED UNDER OTHER DIVISIONS OF THE SPECIFICATIONS BUT INSTALLED UNDER DIVISION 16
D	DOUBLE FACE, SINGLE GANG PEDESTAL WITH 20A, 120V, 2P, 3W DUPLEX RECEPTACLE AND 20A, 240V, 2P, 3W SINGLE RECEPTACLE, FURNISHED AND INSTALLED UNDER DIVISION 16 UNLESS OTHERWISE NOTED. * DENOTES FURNISHED UNDER OTHER DIVISIONS OF THE SPECIFICATIONS BUT INSTALLED UNDER DIVISION 16
	DOUBLE RECEPTACLE, 20A, 120V, 2P, 3W MOUNTED IN BOX CURB FURNISHED UNDER OTHER DIVISIONS OF THE SPECIFICATIONS BUT INSTALLED UNDER DIVISION 16
	SINGLE GANG 20A, 120V, 3P, 3W RECEPTACLE
	QUAD RECEPTACLE
OS	OCCUPANCY SENSOR CAPABLE OF VACANCY
PC	PHOTOCELL

SYMBOLS	DESCRIPTION
COMMUNICATIONS SYSTEMS	
	TELEPHONE OUTLET
	DATA OUTLET
P	DATA INPUT/OUTPUT CABLE OUTLET. "P" DENOTES PROCESS COMPUTER SYSTEM
	VOICE/DATA OUTLET
S	PAGING SPEAKER HORN
S	PAGING SPEAKER BI-DIRECTIONAL
S	PAGING SPEAKER, CEILING MOUNTED TYPE
S	PAGING SPEAKER, WALL MOUNTED TYPE
SECURITY SYSTEMS	
SAP	SECURITY ALARM PANEL
DS	SECURITY ALARM DOOR SWITCH
KP	SECURITY ALARM KEY PAD
CR	SECURITY SYSTEM CARD ACCESS READER
WS	SECURITY ALARM WINDOW SWITCH
MD	SECURITY ALARM MOTION DETECTOR
	SECURITY CAMERA CCTV- CLOSED CIRCUIT TV CAMERA PTZ- PAN, TILT, ZOOM CAMERA LENS CONTROLS
GB	GLASS BREAK DETECTOR
ACP	ACCESS CONTROL PANEL
FIRE ALARM SYSTEMS	
FACP	FIRE ALARM CONTROL PANEL
SD	SMOKE DETECTOR : D- DENOTES DUCT SMOKE DETECTOR R- DENOTES FIXED TEMPERATURE RATE-OF-RISE TYPE.
F	FIRE ALARM MANUAL PULL STATION, MOUNT AT 4'-0"
	ALARM HORN, MOUNT AT 7'-6" : F- DENOTES FIRE ALARM
	ALARM STROBE, MOUNT AT 6'-8" : F- DENOTES FIRE ALARM
	ALARM HORN AND STROBE LIGHT COMBINATION, MOUNT AT 6'-8" : F- DENOTES FIRE ALARM

ABBREVIATIONS

AC	ALTERNATING CURRENT
AFD	ADJUSTABLE FREQUENCY DRIVE
AFF	ABOVE FINISHED FLOOR
AG	ABOVE GRADE
ALUM	ALUMINUM
AMP/A	AMPERE
ATS	AUTOMATIC TRANSFER SWITCH
AUTO	AUTOMATIC
AUX	AUXILIARY
AWG	AMERICAN WIRE GAUGE
C	CONDUIT
CB	CIRCUIT BREAKER
CKT	CIRCUIT
CLF	CURRENT LIMITING FUSE
CP	CONTROL PANEL
CPT	CONTROL POWER TRANSFORMER
CR	CONTROL RELAY
CS	CONTROL SWITCH
CT	CURRENT TRANSFORMER
CU	COPPER
DC	DIRECT CURRENT
DI	DOOR INTERLOCK
DN	DOWN
DWG	DRAWING
EHH	ELECTRICAL HANDHOLE
EC	EMPTY CONDUIT
ELEC	ELECTRICAL
ELEV	ELEVATION
EM	EMERGENCY
EMH	ELECTRICAL MANHOLE
EO	ELECTRICALLY OPERATED
ERMS	ENERGY-REDUCING MAINTENANCE SWITCH
FBO	FURNISHED BY OTHERS
FO	FIBER OPTIC
FRP	FIBERGLASS REINFORCED POLYESTER
FU	FUSE
GCP	GENERATOR CONTROL PANEL
GEN	GENERATOR
G, GRD	GROUND
GFI	GROUND FAULT INTERRUPTER
GFCI	GROUND FAULT CIRCUIT INTERRUPTER
GO	GATE OPERATOR
GRS	GALVANIZED RIGID STEEL
HH	HANDHOLE
HT	HEIGHT
HTP	HEAT TRACE PANEL
HZ	HERTZ
IMH	INSTRUMENT MAN HOLE
INST	INSTRUMENT
LA	LIGHTNING ARRESTER
LC	LIGHTNING CONTACTOR
LCP	LOCAL CONTROL PANEL
LGTS	LIGHTS
LP	LIGHTING PANEL
	CONTINUED ABOVE RIGHT

	CONTINUED BELOW LEFT
LSIG	LONG TIME/SHORT TIME/ INSTANTANEOUS/GROUND FAULT FEATURE INCLUDED
MCC	MOTOR CONTROL CENTER
MCP	MOTOR CIRCUIT PROTECTOR
MFR	MANUFACTURER
MH	MANHOLE
MLO	MAIN LUGS ONLY
MPR	MOTOR PROTECTION RELAY
MTD	MOUNTED
MTS	MANUAL TRANSFER SWITCH
NC	NORMALLY CLOSED
NO	NORMALLY OPEN OR NUMBER
NTS	NOT TO SCALE
OL	OVERLOAD
OLX	OVERLOAD CONTROL RELAY
PB	PUSH BUTTON OR PULL BOX
PCC	PUMP CONTROL CONSOLE
PPR	PHASE PROTECTIVE RELAY
PFR	PHASE FAILURE RELAY
PH	PHASE
PNLBD	PANELBOARD
PR	PAIR
PT	POTENTIAL TRANSFORMER
PTT	PUSH TO TEST TYPE
PVC	POLYVINYL CHLORIDE
QTY	QUANTITY
RCP	RELAY CONTROL PANEL
RECP	RECEPTACLES
RVSS	REDUCED VOLTAGE SOFT STARTER
SC	SURGE CAPACITOR
SCH	SCHEMATIC
SCCR	SHORT CIRCUIT CURRENT RATING
SEC	SECONDS OR SECONDARY
SH	SHIELDED OR SHEET
SHT	SHEET
SM	MOTOR RATED SWITCH
SN	SOLID NEUTRAL
SS	STAINLESS STEEL
ST	STARTER
SV	SOLENOID VALVE
SW	SWITCH
SWBD	SWITCHBOARD
SWGR	SWITCHGEAR
TC	TERMINATION CABINET
TEL	TELEPHONE
TO	TIME DELAY ON OPENING
TS	TEMPERATURE SWITCH
TVSS	TRANSIENT VOLTAGE SURGE SUPPRESSOR
TSW	TWISTED SHIELDED WIRE
TYP	TYPICAL
UG	UNDERGROUND
V	VOLTS
VFD	VARIABLE FREQUENCY DRIVE
VO	VALVE OPERATOR
W	WIRE
WP	WEATHERPROOF
XP	EXPLOSION PROOF
XFMR	TRANSFORMER

NO.	DATE	REVISIONS	APP.

KGI Kalluri Group, Inc.
TBPE Registration No. F-665
16300 Katy Freeway, Suite 172
Houston, Texas 77094
Phone: (713)-365-9288
PROJECT 4285

QUIDDITY
Texas Board of Professional Engineers and Land Surveyors Reg. No. F-23290
6330 West Loop South, Suite 150 • Bellaire, TX 77401 • 713.777.5337

JOB NO: 00050-0099-01 DATE: 5/7/2026

APPROVED BY: RK

DATE: 05/2026

DESIGNED BY: SLJ

DRAWN BY: RHW

SURVEYED BY: WESTERN GROUP CONSULTANTS
FB NO. P-6414

STATE OF TEXAS
STACY L. JORDAN
148233
LICENSED
PROFESSIONAL ENGINEER
05.12.2026

CITY OF HOUSTON
HOUSTON PUBLIC WORKS

SCOTT STREET NO. 1 LIFT STATION REHABILITATION

ELECTRICAL

LEGENDS AND SYMBOLS SHEET 2

WBS NUMBER	FOR CITY OF HOUSTON USE ONLY
R-000267-127A-4	
DRAWING SCALE	
AS NOTED	
CITY OF HOUSTON PM	
TAHA LOTIA	
DWG NO. 0-E-02	
SHEET NO. 123 OF 220	

F:\Users\KGI-StacyJordan\Kalluri Group, Inc\KGI - Documents\4285-QEL (Scott Street LS)\Drawings\Electrical\0-E-02 Legends and Symbols Sheet 2.dwg

0 1 2 3 4 5 ORIGINAL SCALE IN INCHES FOR REDUCED PLANS

ELECTRICAL GENERAL NOTES

1. WHERE NOTES ON THE DRAWINGS STATE THAT "THE CONTRACTOR SHALL FIELD VERIFY", THE INTENT IS FOR THE CONTRACTOR TO INVESTIGATE EXISTING CONDITIONS, PRIOR TO THE START OF WORK, TO ENSURE THE WORK CAN BE COMPLETED AS DESCRIBED IN THE CONTRACT DOCUMENTS. THE CONTRACT PRICE SHALL NOT BE INCREASED IF THE CONTRACTOR HAS NOT INVESTIGATED, PRIOR TO THE START OF WORK, WHERE THE NOTES DIRECTING THAT TO BE DONE.
2. ALL WORK SHALL BE PERFORMED IN COMPLIANCE WITH LATEST EDITION OF THE NEC (NATIONAL ELECTRICAL CODE), LOCAL CODES, AND AUTHORITIES HAVING JURISDICTION.
3. ALL PROPOSED ELECTRICAL EQUIPMENT THAT SERVE THE FACILITY SHALL BE ELEVATED TO AT LEAST 3FT ABOVE THE 500 YEAR FLOOD PLAIN ELEVATION.
4. THE NOTES CONTAINED ON THIS SHEET ARE PROVIDED FOR THE CONVENIENCE OF THE CONTRACTOR WHEN WORKING IN THE FIELD, AND CONTAIN EXCERPTS FROM THE SPECIFICATION SECTIONS. HOWEVER THE CONTRACTOR IS HEREBY ADVISED THAT THE CONTRACT DOCUMENTS CONSIST OF BOTH THE DRAWINGS AND THE SPECIFICATIONS, AND THAT THE CONTRACTOR MUST COMPLY FULLY WITH BOTH THE CONTRACT DRAWINGS AND SPECIFICATIONS.
5. ALL EQUIPMENT WIRING, RACEWAYS, ETC. SHALL BE INSTALLED AND GROUNDED IN ACCORDANCE WITH THE LATEST EDITION OF THE NATIONAL ELECTRICAL CODE (NEC), LOCAL CODES, AND INDUSTRY STANDARDS (IE. UL, NEMA, IEEE, ANSI, ETC.) THE DRAWING NOTES AND DETAILS SHALL BE COMPLIED WITH IN ADDITION TO THE REQUIREMENTS IN THE SPECIFICATIONS. REFER TO EACH SPECIFICATION SECTION FOR ADDITIONAL REQUIREMENTS.
6. ALL RACEWAY INSTALLATIONS SHALL BE INSTALLED IN A MANNER TO PREVENT CONFLICTS WITH EQUIPMENT AND STRUCTURAL CONDITIONS. ALL EXPOSED RACEWAY SHALL BE INSTALLED PARALLEL TO BEAMS, CEILINGS, FLOORS AND WALLS. SEE SPECIFICATION ON RACEWAYS FOR ADDITIONAL REQUIREMENTS.
7. CONDUIT IN AIR CONDITIONED SPACES MAY BE RIGID ALUMINUM. EXPOSED CONDUIT LOCATED IN THE WET WELLS, DRY WELLS AND ALL OUTDOORS SHALL BE PVC COATED RIGID ALUMINUM. IT SHALL BE, PREPARED, THREADED, SUPPORTED AND INSTALLED IN A WORKMANSHIP LIKE MANNER AND STRICTLY IN ACCORDANCE WITH THE MANUFACTURER'S RECOMMENDATIONS, SPECIFICATIONS, AND DRAWINGS.
8. PVC COATED CONDUIT SHALL BE TERMINATED INTO ENCLOSURES WITH PVC COATED MYERS TYPE HUBS. IT SHALL BE PERPENDICULAR TO THE WALLS OF THE ENCLOSURE. THE USE OF CONDUIT FITTINGS TO ENTER ENCLOSURES IS NOT PERMITTED, RFI THE SITUATION FOR EXCEPTION ACCEPTANCE.
9. ALL RACEWAY INSTALLATIONS, CROSSING EXPANSION JOINTS OR TRANSITIONS SHALL HAVE EXPANSION OR EXPANSION/DEFLECTION TYPE FITTINGS AS SPECIFIED FOR THE APPLICATION. SEE THE DRAWINGS AND THE SPECIFICATION ON RACEWAYS FOR THE EXACT TYPE OF FITTING TO BE USED.
10. NO CONDUIT SMALLER THAN 3/4" IS ALLOWED, EXCEPT WHERE REQUIRED TO ENTER A SPECIFIC DEVICE OR INSTRUMENT. POWER CONDUCTOR SHALL #12 AWG MINIMUM. CONDUCTORS SMALLER THAN #12 AWG IN DUCT BANK SHALL BE IN MULTI-CONDUCTOR CABLES. ALL CABLES ROUTED UNDERGROUND SHALL BE RATED FOR WET ENVIRONMENT.
11. CONTRACTOR SHALL CONFIRM UNDERGROUND DUCTS SIZES FOR ALL UNDERGROUND DUCT BANKS TO BE SCH 80 RIGID PVC, ENCASED IN REBAR REINFORCED RED CONCRETE. CONCRETE SHALL BE DYED RED, IN THE TRUCK, BEFORE PLACEMENT. DUCT BANKS SHALL RISE VERTICALLY TO BE POURED MONOLITHIC WITH STRUCTURES, ROADWAYS OR FOUNDATIONS. DUCT BANKS SHALL NOT BE SUBJECT TO DISPROPORTIONATE SETTLING. COORDINATE ROUTING OF NEW CONDUIT AND DUCT BANKS TO AVOID INTERFERENCE WITH EXISTING CONDUIT, DUCT BANKS, AND OTHER UNDERGROUND UTILITIES.
12. ALL CHANGES OF DIRECTION GREATER THAN 10 DEGREES IN UNDERGROUND DUCT BANKS SHALL BE ACCOMPLISHED USING PVC COATED RIGID ALUMINUM FACTORY BENDS. BENDS OF PVC CONDUIT GREATER THAN 10 DEGREES, OR THE USE OF FLEXIBLE CONDUIT OF ANY TYPE, IS NOT PERMITTED. SEE THE SPECIFICATIONS FOR MORE REQUIREMENTS.
13. LIQUID TIGHT FLEXIBLE ALUMINUM CONDUIT SHALL BE USED FOR; THE PRIMARY AND SECONDARY OF TRANSFORMERS, DEVICE TERMINATIONS AND WHERE VIBRATION IS PRESENT. USE IN CONDUIT RUNS IS NOT PERMITTED. LIQUID TIGHT FLEXIBLE ALUMINUM CONDUIT SHALL HAVE A MAXIMUM LENGTH OF 3 FEET. THE MAXIMUM BENDING RADIUS SHALL NOT BE LESS THAN THAT SHOWN IN THE NEC CHAPTER 9, TABLE 2.
14. THE WIRING DIAGRAMS, BLOCK DIAGRAMS, QUANTITY/SIZES OF WIRES/CONDUITS PRESENTED IS BASED UPON THE SELECTED DESIGN EQUIPMENT. DEVIATIONS FROM THE DESIGN CRITERIA IS ACCEPTABLE; IF SUBMITTED EQUIPMENT IS COMPLIANT WITH THE RELATED PERFORMANCE SPECIFICATIONS, IS APPROVED BY THE CITY, AND CONTRACTOR MAKES THE REQUIRED CHANGES THROUGH SUBMITTAL PROCESS WITH SUPPORTING DOCUMENTS FOR THE CHANGES REQUIRED ALL OF THIS SHALL BE AT THE CONTRACTOR'S EXPENSE. ALL MODIFICATIONS SHALL BE SUBMITTED TO THE ENGINEER FOR APPROVAL AND SHOWN IN AS BUILT DRAWINGS. THE SEQUENCE AND METHOD OF CONTROL MUST BE MAINTAINED AS INDICATED ON THE DRAWINGS AND/OR SPECIFIED.
15. WHERE ENVIRONMENT CONTAINS "GASES" SEAL ALL RACEWAYS ENTERING JUNCTION BOXES OR CONTROL PANELS. REFER TO THE DRAWINGS AND SPECIFICATIONS FOR DETAILS.
16. ALL EQUIPMENT AND ENCLOSURE LOCATIONS ARE APPROXIMATE, BASED ON DESIGN EQUIPMENT. THE ULTIMATE EXACT LOCATIONS SHALL BE COORDINATED DURING CONSTRUCTION.
17. EQUIPMENT, ENCLOSURES, TERMINAL AND JUNCTION BOX DIMENSIONS SHALL BE COORDINATED WITH ACCEPTED EQUIPMENT AND VERIFIED WITH EQUIPMENT SUPPLIERS.
18. CORING OF ANY EXISTING STRUCTURE SHALL BE; XRAY RESEARCHED, SUBMITTED FOR ACCEPTANCE, AND COORDINATED WITH THE OWNER & STRUCTURAL ENGINEER.
19. PROVIDE CONDUIT SEALS FOR CONDUIT PENETRATIONS AS PER NFPA 70 (NEC) AND NFPA 820.
20. ALL STRUT (SLOTTED CHANNEL), WASHERS, SCREWS, NUTS, CONDUIT CLAMPS, ALL THREAD SPRING NUTS AND MISC. MOUNTING HARDWARE SHALL BE 316 STAINLESS STEEL.
21. LIGHTING FIXTURES SHALL BE MOUNTED ACCORDING TO THE MOUNTING HEIGHT GIVEN ON THE DRAWINGS. THE MOUNTING HEIGHT SHALL BE MEASURED FROM THE BOTTOM OF THE LIGHTING FIXTURE TO THE FINISHED FLOOR.
22. CONTRACTOR SHALL PROVIDE CONDUIT AND WIRE FOR POWER AND CONTROL OF THE HVAC EQUIPMENT. THE HVAC CONTROL PANEL, STARTERS, MOTOR PROTECTION, AND MISCELLANEOUS DEVICES SHALL ALL BE COORDINATED WITH HVAC SYSTEM PROVIDED AND THE MANUFACTURERS REQUIREMENTS.
23. ALL CONDUIT FITTINGS SHALL BE FORM 7 AND SHALL HAVE 316 SS CLAMP COVERS WITH 316 SS CLAMPS AND SCREWS. SCREW DOWN COVERS ARE UNACCEPTABLE. REFER TO THE SPECIFICATIONS FOR MORE INFORMATION.
24. ALL BARE GROUNDING CONDUCTORS SHALL BE IN ACCORDANCE WITH GROUNDING SPECIFICATIONS. ALL GROUND RODS SHALL BE 3/4" BY 10' LONG, UNLESS OTHERWISE SHOWN ON THE DRAWINGS.

EARLY WORK GENERAL NOTES

1. CONTRACTOR SHALL FIELD VERIFY IN THE FIRST DAYS ON SITE; THE "AS FOUND" CONDITIONS OF ELECTRICAL EQUIPMENT. THE OPERATIONAL STATUS OF EXISTING EQUIPMENT (IS IT AVAILABLE FOR SERVICE) SHALL BE ESTABLISHED WITH OPERATIONS. SITE DUCT BANKS SHALL BE RESEARCHED FOR CONDUCTOR REMOVAL AND DEMOLITION. RESULTS OF THE RESEARCH AND CONTRACTIBILITY ASSURANCE SHALL BE SUBMITTED FOR ACCEPTANCE PRIOR TO ANY DISCONNECTIONS OR INSTALLATIONS. SEE AS FOUND DOCUMENTATION NOTES ON THIS SHEET.
2. A "TEMPORARY POWER PLAN" SHALL BE CREATED BY THE CONTRACTOR IN COORDINATION WITH THE YARD PIPING PHASES, TEMPORARY PUMPING AND CHEMICAL TREATMENTS REQUIRED. THE DRAWINGS PROVIDE AN ACCEPTABLE MINIMUM OF TEMPORARY SERVICE ALLOWED. SUBMIT THE PLAN UNDER SPECIFICATION 16060 FOR ACCEPTANCE PRIOR TO ANY WORK BEING DONE ON THE SITE.
3. A TEMPORARY SERVICE RACK SHALL BE CONSTRUCTED, AND A "TEMPORARY" SERVICE PROVIDED. CONTRACTOR SHALL PAY FOR AND COORDINATE WITH CPE (CENTERPOINT ENERGY) FOR THE TEMPORARY SERVICE. ALL TEMPORARY FACILITIES SHALL BE INSTALLED IN COMPLIANCE WITH THE NATIONAL ELECTRICAL CODE AND IN ACCORDANCE WITH LOCAL REQUIREMENTS.
4. TEMPORARY POWER IS TO BE ROUTED OVERHEAD, FROM THE TEMPORARY SERVICE RACK, TO THE WET WEATHER LIFT STATION. A 480V AND 120V POWER PANEL SHALL BE INSTALLED IN THE LIFT STATION ELECTRICAL ROOM, SEE PLANS FOR MORE INFORMATION. TEMPORARY SUMP PUMPS, A SAFE LEVEL OF VENTILATION, AND COMPLIANT CONSTRUCTION LIGHTING SHALL BE PROVIDED POWER AND CONTROL AS REQUIRED. MODIFICATIONS TO EXISTING EQUIPMENT MAY BE MADE, FOR TRANSITION TO TEMPORARY, IF CLEARLY DEFINED IN THE "TEMPORARY POWER PLAN". WET WEATHER STATION BUILDING EXTERIOR WALL PACK CIRCUITS SHALL BE PROVIDED TEMPORARY POWER AND CONTROL, TO KEEP THE SITE SAFELY LIT. THE TWO SUMP PUMP SYSTEMS ARE TO EACH HAVE THE CONTROLLERS LOCATED ON THE MOTOR LEVEL. ENSURE A SAFE WORKPLACE, ON THE SITE AND IN THE LIFT STATION BUILDING. ALL INDOOR LIGHTING AND VENTILATION SHALL BE IN ACCORDANCE WITH OSHA SAFE WORKPLACE REQUIREMENTS.
5. COORDINATE WITH OTHERS TO PROVIDE ADEQUATE TEMPORARY POWER AND CONTROLS TO THE TEMPORARY ODOR CONTROL SYSTEM. EXISTING ELECTRICAL EQUIPMENT AND COMPONENTS THAT SERVE THE EXISTING FACILITY MAY BE UTILIZED FOR TEMPORARY OPERATION.
6. THE DRY WEATHER STATION WILL BE REMOVED FROM SERVICE. BYPASS OPERATION MAY REQUIRE TEMPORARY POWER OR CONTROL EQUIPMENT, DEPENDENT ON CONTRACTOR'S TEMPORARY BYPASSING PLAN, SEQUENCE SCHEDULE, MEANS AND METHODS. DURING THE DRY WEATHER LIFT STATION WET WELL STRUCTURAL REHABILITATION ALL OF THE RELATED EXISTING ELECTRICAL SHALL BE REMOVED AND REPLACED.

AS FOUND DOCUMENTATION NOTES

1. DO NOT START WORK OR MAKE ANY MODIFICATIONS TO EXISTING EQUIPMENT UNTIL THE FOLLOWING "AS FOUND" RECORD OF CONDITION HAS BEEN DONE:
   A. THE OWNER AND CONTRACTOR SHALL WALK THE SITE TOGETHER WITNESS AND RECORD THE OPERATION CONDITION OF ALL THE EXISTING EQUIPMENT RELATED TO THIS PROJECT. THE CONTRACTOR SHALL NOTE ANY DEFECTS, DEFICIENCIES OR DEVIATIONS FROM THE DRAWINGS.
   B. WRITTEN AND PHOTOGRAPHIC "AS FOUND" RECORD OF EXISTING CONDITIONS SHALL BE KEPT IN THE OWNER/CONTRACTOR TRAILER, FOR GENERAL INFORMATIONAL USAGE AND PROOF OF STATUS.
   C. EXISTING CONCRETE EMBEDDED CONDUIT MAY BE USED FOR NEW CONDUCTORS WITH APPROVAL FROM THE OWNER/ENGINEER ON A CASE-BY-CASE BASIS.

PROJECT DEMOLITION AND REMOVAL NOTES

1. THE EXISTING ELECTRIC SERVICE ENTRANCE DUCT BANK IS TO BE EXCAVATED AND CUT IN TWO PLACES, AT THE CPE TRANSFORMER AND WET WEATHER STATION, THEN RE-ROUTED THROUGH THE NEW ELECTRICAL BUILDING SERVICE EQUIPMENT.
2. PROPOSED YARD PIPING WORK WILL REQUIRE DEMOLITION OF SOME OF THE EXISTING ELECTRICAL DUCT BANKS. EXISTING DUCT BANK SECTIONS THAT DO NOT REQUIRE REMOVAL MAY BE CONSIDERED FOR USAGE, SUBMIT AN RFI FOR PROPOSED WORK CONSIDERATION.
3. THE DRY WEATHER STATION SHALL BE SHUT DOWN AND ALL ELECTRICAL ASPECTS REMOVED AND REPLACED. INCLUDING BUT NOT LIMITED TO; PUMPS, TERMINATION BOXES, CONDUCTORS, CONDUIT, LIGHTING, AND RELATED CONTROLS. SCADA AND CONTROL DEVICES ARE TO BE REMOVED AND REPLACED WITH ALL NEW EQUIPMENT.
4. NOT ALL OF THE MECHANICAL EQUIPMENT IN THE WET PUMP WEATHER STATION IS TO BE REMOVED OR REPLACED IN THIS PROJECT, COORDINATE AND DOCUMENT ACTIVITIES. THE WET WEATHER STATION SHALL BE SHUT DOWN AND ALL ELECTRICAL ASPECTS REMOVED AND REPLACED. INCLUDING BUT NOT LIMITED TO; THE MAIN SWITCHGEAR, THE MOTOR CONTROL CENTERS, PANEL BOARDS, DISCONNECTS, TRANSFORMERS ALL CONDUCTORS, LIGHTING, HVAC, VENTILATION, AND RELATED CONTROLS. THE SITE SCADA CONTROL PANELS ARE TO BE REMOVED AND REPLACED WITH ALL NEW EQUIPMENT. THE LOWER (PUMP) LEVEL, OF THE WET WEATHER STATION DRY WELL, HAS FLOODED MULTIPLE TIMES. IN ADDITION TO ALL THE CONDUCTORS, DEVICES, EXPOSED CONDUIT, SUPPORTS, AND ANCHORS BEING REMOVED AND REPLACED WITH NEW THE EXISTING SUMP PUMP POWER AND CONTROL CONNECTIONS ARE TO BE RELOCATED TO THE MOTOR LEVEL.
5. SITE LIGHTING, ODOR CONTROL AND CHEMICAL SYSTEMS EQUIPMENT REMOVAL INCLUDES BUT IS NOT LIMITED TO; POLE TYPE SITE LIGHTING, DISCONNECTS, TERMINATION BOXES, CONTROL PANELS, GROUNDING SYSTEM AND MISCELLANEOUS ELECTRICAL EQUIPMENT. ALL DEVICES, ALL CONDUCTORS, ALL EXPOSED OUTDOOR CONDUIT, ALL SUPPORTS, AND ANCHORS ARE TO BE REMOVED AND REPLACED WITH NEW.
6. THE DRAWINGS ILLUSTRATE THE ENGINEER'S INTENT AND GENERALLY SCOPE THE DEMOLITION WORK. FOR DRAWING CLARITY NOT ALL ITEMS TO BE REMOVED MAY BE SHOWN. ALL REMOVALS SHALL BE COORDINATED WITH OTHER TRADES AND THE CONSTRUCTION SCHEDULE.
7. THE OWNER SHALL WALK THE SITE DEMOLITION, WITH THE CONTRACTOR, AND HAS FIRST RIGHT OF REFUSAL TO THE EQUIPMENT BEING REMOVED. THE CONTRACTOR SHALL DELIVER THE EQUIPMENT, THE OWNER WISHES TO RETAIN, TO THE LOCATION DESIGNATED BY THE OWNER IN THE SPECIFICATIONS.

WORK SCOPE GENERAL DESCRIPTION

1. COORDINATE WITH CPE, SUBMIT, AND INSTALL COMPLETE TEMPORARY FACILITIES SYSTEMS TO SUPPORT; THE WET WEATHER STATION, REHABILITATION, THE CONTRACTOR'S CONSTRUCTION TEMPORARY, LIFT STATION BYPASS AND REQUIRED SYSTEMS. COMPLETELY REMOVE ALL TEMPORARY FACILITIES AFTER COMPLETION OF PROPOSED FACILITIES AND ACCEPTANCE OF THEM.
2. THE PROPOSED ELECTRICAL BUILDING ELECTRICAL EQUIPMENT IS TO PROVIDE BOTH PORTABLE, AND PERMANENT GENERATOR CONNECTION CAPABILITY. IT WILL ALSO HOUSE NEW DRY WEATHER PUMP STATION ELECTRICAL POWER AND SCADA EQUIPMENT. THE WET WEATHER STATION, NEW CHEMICAL FACILITY, NEW FLOW CONTROL STATION, NEW ODOR CONTROL FACILITY AND PROPOSED SITE LIGHTING SYSTEM SHALL ALSO BE FED FROM THE NEW ELECTRICAL BUILDING. THE WET WEATHER PUMP STATION SHALL BE PROVIDED NEW MOTOR CONTROL CENTERS AND SCADA CONTROL PANELS FOR WET WEATHER PUMPING.
3. CONTRACTOR SHALL COORDINATE WITH CENTERPOINT ENERGY TO DISCONNECT POWER TO THE SITE UPON INSTALLATION AND OPERATION OF THE TEMPORARY FACILITIES. THE EXISTING UNDERGROUND FEEDERS, FROM THE UTILITY TRANSFORMER TO THE EXISTING ELECTRICAL EQUIPMENT, ARE TO BE INTERCEPTED AND RE-ROUTED THROUGH THE PROPOSED ELECTRICAL BUILDING EQUIPMENT.
4. EXISTING COMMUNICATIONS UNDERGROUND SERVICE, TO THE SITE, IS TO BE INTERCEPTED AND RE-ROUTED THROUGH THE NEW SCADA COMMUNICATIONS PANEL, IN THE NEW ELECTRICAL BUILDING.
5. THE DRY WEATHER STATION SHALL BE PROVIDED A COMPLETE ELECTRICAL RESTORATION. ALL NEW; DUCT BANKS, PUMPS, CABLE SUPPORTS, SEALS, INSTRUMENTS, FLOATS, AND TERMINATION BOXES. ALL NEW EXPOSED CONDUIT, TAGS, SUPPORTS, FLEXIBLE FINAL CONNECTIONS, NAMEPLATES AND LABELS. THE NEW DRY WEATHER STATION LIFT PUMPS SHALL BE POWERED AND CONTROLLED FROM MCC-1 IN THE NEW ELECTRICAL BUILDING. CONTRACTOR SHALL PROVIDE A COMPLETE AND WORKING, SCADA INTEGRATED, DRY WEATHER PUMP SYSTEM.
6. THE WET WEATHER STATION SHALL BE PROVIDED A COMPLETE ELECTRICAL RESTORATION. ALL NEW; DUCT BANKS, SWITCHGEAR, MOTOR CONTROLLER EQUIPMENT, PANELBOARDS, TRANSFORMERS, HVAC EQUIPMENT, AND MISCELLANEOUS BUILDING IMPROVEMENTS. THE VERTICAL SHAFT DRIVEN PUMPS ARE TO BE REMOVED AND THE NEW DRY PIT SUBMERSIBLE PUMPS ARE TO BE PROVIDED. COORDINATE NEW CONDUIT EXACT ROUTE WITH MECHANICAL. DRY PIT SUBMERSIBLE FACTORY PUMP CABLE ROUTE AND SUPPORTS SHALL BE COORDINATED WITH STRUCTURAL CRANE SUPPORT AND HVAC MECHANICAL ASPECTS. NEW INSTRUMENTS, FLOATS, AND TERMINATION BOXES SHALL BE PROVIDED. ALL NEW EXPOSED CONDUIT, TAGS, SUPPORTS, FLEXIBLE FINAL CONNECTIONS, NAMEPLATES AND LABELS. CONTRACTOR SHALL PROVIDE A COMPLETE AND WORKING, SCADA INTEGRATED, WET WEATHER PUMP SYSTEM.
7. NEW DUCT BANK SHALL SUPPLY POWER AND CONTROL TO THE PROPOSED CHEMICAL STORAGE AND FEED FACILITIES, FROM THE PROPOSED ELECTRICAL BUILDING. CONTRACTOR SHALL PROVIDE A COMPLETE AND WORKING, SCADA INTEGRATED, CHEMICAL STORAGE AND FEED SYSTEM.
8. NEW DUCT BANK SHALL FEED POWER AND CONTROL TO THE PROPOSED FLOW CONTROL STATION. IT SHALL IS TO BE PROVIDED WITH NEW MODULATING CONTROL VALVES, A FLOW METER AND ALL INSTRUMENTS REQUIRED. CONTRACTOR SHALL PROVIDE A COMPLETE AND WORKING, SCADA INTEGRATED, FLOW CONTROL STATION.
9. NEW DUCT BANK SHALL FEED POWER, CONTROL AND SCADA TO THE NEW ODOR CONTROL FACILITIES, FROM THE NEW ELECTRICAL BUILDING. AN EQUIPMENT RACK FOR POWER PANELS, AN ODOR CONTROL PANEL, AND MISCELLANEOUS COMPONENTS IS TO BE COORDINATED WITH CONTRACTOR SELECTED AND APPROVED SYSTEMS. THE EXISTING ODOR CONTROL SYSTEM IS TO BE REMOVED AND RELOCATED FOR TEMPORARY SERVICE, PROVIDE ALL TEMPORARY FOR THIS TASK EARLY.
10. GENERAL SITE IMPROVEMENTS INCLUDE BUT ARE NOT LIMITED TO GROUNDING. TEST WELLS SHALL BE REMOVED AND REPLACED AS SHOWN. GROUNDING CABLE SYSTEM SHALL BE REPLACED THROUGH THE CONSTRUCTION PHASES. FENCE GROUNDING, TO THE PROPOSED FENCE SYSTEM SHALL BE PROVIDED ALL NEW HARDWARE. SITE LIGHTING INCLUDING BUT NOT LIMITED TO NEW LIGHTING CONTROL PANEL, NEW LED SITE LIGHT FIXTURES, WITH CONVENIENCE OUTLETS AS SHOWN.
11. EXISTING CONCRETE ENCASED CONDUIT IS ACCEPTABLE FOR PROPOSED WORK UNDER CONDITIONAL ACCEPTANCE. EACH EXISTING CONDUIT TO BE UTILIZED SHALL BE REQUESTED IN AN RFI. EXISTING CONCRETE EMBEDDED CONDUIT THAT IS CUT FOR PROPOSED WORK IS NOT TO BE PATCHED FOR RE-USE WITHOUT RFI ACCEPTANCE.

NO.	DATE	REVISIONS	APP.

NOTICE:
FOR YOUR SAFETY, YOU ARE REQUIRED BY TEXAS LAW TO CALL 811 AT LEAST 48 HOURS BEFORE YOU DIG SO THAT UNDERGROUND LINES CAN BE MARKED. THIS SIGNATURE DOES NOT FULFILL YOUR OBLIGATION TO CALL 811

VERIFICATION OF PRIVATE UTILITY LINES

Date:

CenterPoint Energy natural gas utilities shown.
(Gas services lines are not shown). This signature not to be used for conflict verification.
Signature Valid for six months.

Date:

CenterPoint Energy / UNDERGROUND Electrical Facilities Verification ONLY.
(This Signature verifies existing underground facilities - not to be used for conflict verification.)
Signature Valid for six months.

Date:

Approved for AT&T Texas / SWBT underground conduit facilities only.
Signature valid for one year.

KGI Kalluri Group, Inc.
TBPE Registration No. F-665
16300 Katy Freeway, Suite 172
Houston, Texas 77094
Phone: (713)-365-9288
PROJECT 4285

QUIDDITY
Texas Board of Professional Engineers and Land Surveyors Reg. No. F-23290
6330 West Loop South, Suite 150 • Bellaire, TX 77401 • 713.777.5337

JOB NO: 00050-0099-01 DATE: 5/7/2026

APPROVED BY: RK
DATE: 05/2026
DESIGNED BY: SLJ
DRAWN BY: RHW
SURVEYED BY: WESTERN GROUP CONSULTANTS
FB NO. P-6414

STATE OF TEXAS
STACY L. JORDAN
148233
LICENSED
PROFESSIONAL ENGINEER
06.12.2026

CITY OF HOUSTON
HOUSTON PUBLIC WORKS

SCOTT STREET NO. 1
LIFT STATION REHABILITATION
ELECTRICAL

CONSTRUCTION NOTES

WBS NUMBER	FOR CITY OF HOUSTON USE ONLY
R-000267-127A-4	
DRAWING SCALE	
AS NOTED	
CITY OF HOUSTON PM	
TAHA LOTIA	
DWG NO. 0-E-03	
SHEET NO. 124 OF 220	

0 1 2 3 4 5 ORIGINAL SCALE IN INCHES FOR REDUCED PLANS

NO.	DATE	REVISIONS	APP.

ELECTRICAL TASKS NOTES:

1. A TEMPORARY POWER RACK AND OVERHEAD LINE SYSTEM WILL BE REQUIRED FOR POWER, CONTROL AND SCADA TO FEED CRITICAL SYSTEMS, CONSTRUCTION AND TESTING POWER. UPON INSTALLATION OF THE TEMPORARY SERVICE AND DISTRIBUTION CONTRACTOR SHALL COORDINATE TO HAVE THE EXISTING CPE ELECTRIC UTILITY SERVICE DE-ENERGIZED. CONDUCTORS SHALL BE DISCONNECTED, REMOVED AND REPLACED TO ACCOMPLISH THE VARIOUS CONSTRUCTION PHASES REQUIRED.
2. THE EXISTING ELECTRIC SERVICE UNDERGROUND FEEDERS SHALL BE LOCATED AT THE EAST EDGE OF THE ROADWAY AND AT THE LIFT STATION STRUCTURE. THE SERVICE FEEDER DUCT BANK IS TO BE INTERCEPTED AND REROUTED THROUGH THE NEW ELECTRICAL BUILDING SWITCHGEAR.
3. THE ENTIRE HATCHED AREA WILL BE EXCAVATED FOR LARGE DEEP YARD PIPING. THE EXISTING DUCT BANKS SHALL BE REMOVED THE WIDTH OF THE DEEP EXCAVATION. THE DRY WEATHER LIFT STATION SHALL REMAIN OUT OF SERVICE DURING THE EARLY PHASE OF CONSTRUCTION; THE DUCT BANK, POWER EQUIPMENT, TERMINATION BOXES, INSTRUMENTS, AND FLOATS ARE TO BE REMOVED AND REPLACED. CONCRETE ENCASED CONDUITS MAY BE USED FOR PROPOSED WORK
4. EARLY PHASE WORK WILL REQUIRE THE EXISTING ODOR CONTROL FACILITY TO BE DISCONNECTED, RELOCATED AND CONNECTED TO TEMPORARY FACILITIES FOR AN EXTENDED PERIOD OF SERVICE. COORDINATE LOCATION OF TEMPORARY PROVISIONS AND INCLUDE IN PROJECT "TEMPORARY FACILITIES PLAN".
5. SITE GROUNDING WILL REQUIRE CUTTING FOR PROPOSED YARD PIPING AND WILL REQUIRE REPAIRS THROUGH ALL PHASES OF CONSTRUCTION TO MAINTAIN EXISTING SITE GROUNDING SYSTEM CONNECTIONS.
6. THE CONTRACTOR SHALL PROVIDE A TEMPORARY POWER PANEL IN THE LIFT STATION ELECTRICAL ROOM TO SERVE TEMPORARY LIGHTING, TEMPORARY VENTILATION, SUMP PUMPS, CRITICAL EQUIPMENT, CONTROL AND SCADA CIRCUITS. SEE EXISTING WET WEATHER PUMP STATION DRAWINGS FOR MORE INFORMATION. SEE 0-E-05 AND EXISTING WET WEATHER STATION PLANS FOR MORE INFORMATION.

GENERAL ELECTRICAL NOTES:

A. THIS DRAWING ILLUSTRATES THE EXISTING SITE AND EARLY ELECTRICAL TASKS, FOR TEMPORARY POWER. IT DESCRIBES AREAS WHERE EQUIPMENT TO BE REMOVED, RELOCATED, AND REPLACED IN THIS PROJECT. SEE WET WEATHER PUMP STATION DRAWINGS FOR MAJOR ELECTRICAL EQUIPMENT REMOVALS AND TEMPORARY REQUIREMENTS. SEE DIVISION 16 SPECIFICATIONS FOR ALL WORK AND EQUIPMENT REQUIREMENTS. ALL TEMPORARY CONDUIT AND CONDUCTORS, FOR ALL SYSTEMS, SHALL BE INSTALLED IN COMPLIANCE WITH THE NEC ARTICLE 590.

B. NOT ALL OF THE MECHANICAL EQUIPMENT IN THE WET WEATHER PUMP STATION IS TO BE REMOVED OR REPLACED, IN THIS PROJECT. PRIOR TO START OF WORK THE CONTRACTOR SHALL COORDINATE AND SUBMIT THE "TEMPORARY PLAN" FOR CRITICAL MECHANICAL EQUIPMENT, SITE LIGHTING, ODOR CONTROL, AND HVAC EQUIPMENT TEMPORARY PROVISIONS. THE OPERATIONAL STATUS, OF ALL EQUIPMENT ON SITE IS TO BE CONFIRMED WITH WASTEWATER OPERATIONS PRIOR TO START OF WORK. TO ENSURE THERE IS NO CONFLICT LATER, EQUIPMENT THAT IS NOT FUNCTIONAL AT START OF THE PROJECT IS TO BE DOCUMENTED IN AN "AS FOUND" SHOP DRAWING SUBMITTAL. SEE SPECIFICATION 16060 FOR SUBMITTAL REQUIREMENT. TEMPORARY PATH OF POWER, CONTROLS AND SCADA CIRCUITS SHALL BE CONFIRMED PRIOR TO INSTALLATION OF ANY TEMPORARY OR REMOVAL FROM AVAILABILITY.

C. CONTRACTOR SHALL SUBMIT AN RFI AND NOTIFY THE CITY CONSTRUCTION REPRESENTATIVE, UPON DISCOVERY, OF ANY CONCEALED DEVIATIONS FROM THE DRAWINGS EXPOSED AFTER "AS FOUND" DOCUMENT SUBMITTAL.

D. CONTRACTOR HAS TASKS, IN THIS PROJECT, IN NEAR PROXIMITY TO CNP OVERHEAD POWER LINES. CONTRACTOR SHALL FOLLOW NEC AND CNP STANDARDS FOR SAFE WORKING DISTANCE, TEMPORARY SIGNAGE AND PROCEDURES.

E. TEMPORARY PROVISIONS INCLUDE SITE LIGHTING, IF THE EXISTING DRY WEATHER PUMP STATION IS IN SERVICE EXISTING SITE LIGHTING POLES 2 AND 3 SHALL BE KEPT FUNCTIONAL WITH TEMPORARY PROVISIONS. IF POLES 2 AND 3 CANNOT BE KEPT ON THE CONTRACTOR SHALL PROVIDE TEMPORARY LIGHTING FOR THE DRY WEATHER PUMP STATION OPERATIONS.

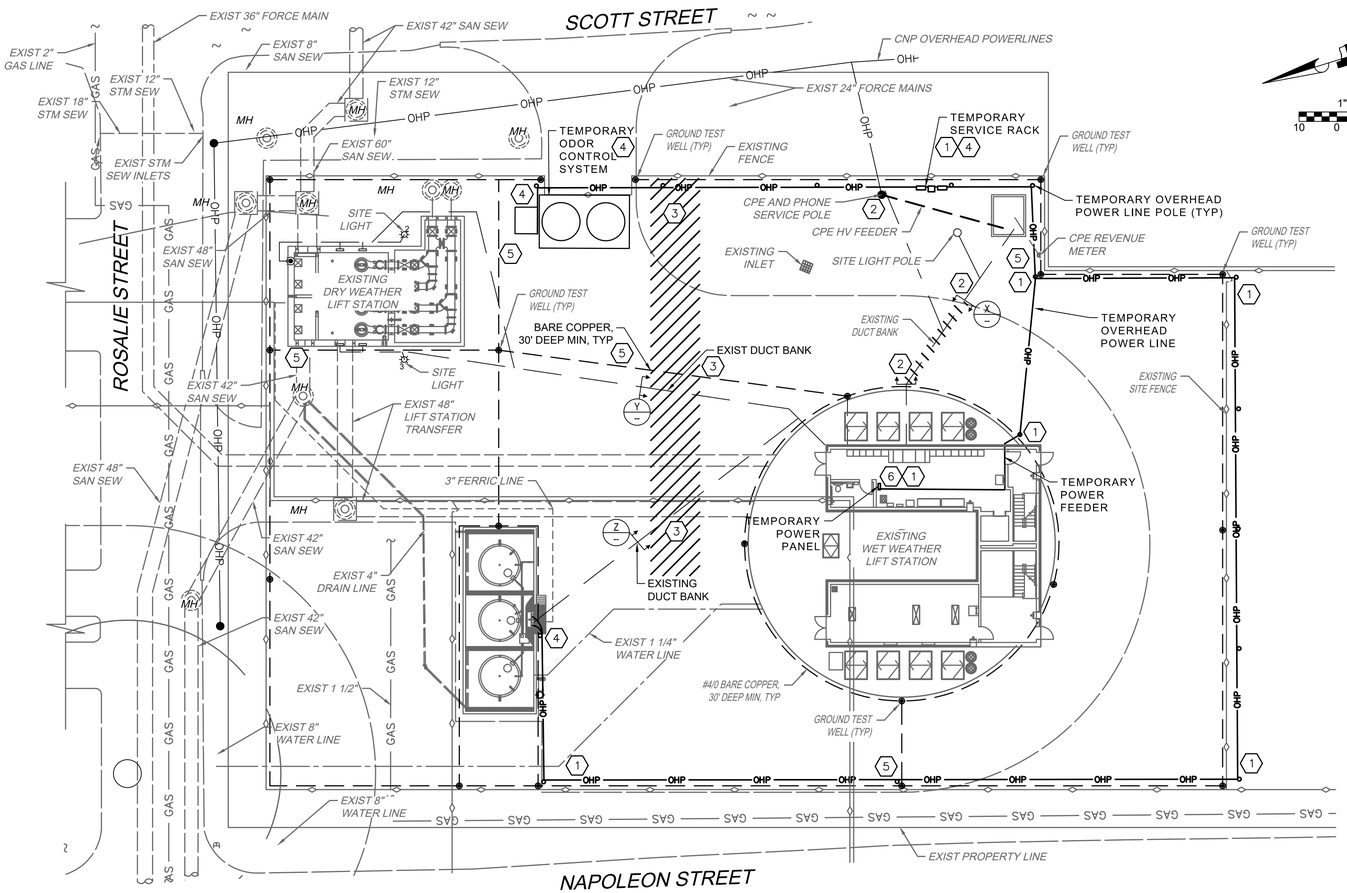

OVERALL EXISTING SITE AND TEMPORARY

PLAN

1" = 20'-0"

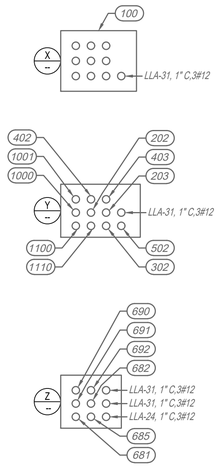

EXISTING DUCT BANK

SECTIONS

NONE

KGI Kalluri Group, Inc.
TBPE Registration No. F-665
16300 Katy Freeway, Suite 172
Houston, Texas 77094
Phone: (713)-365-9288
PROJECT 4285

QUIDDITY
Texas Board of Professional Engineers and Land Surveyors Reg. No. F-23290
6330 West Loop South, Suite 150 • Bellaire, TX 77401 • 713.777.5337

JOB NO: 00050-0099-01 DATE: 5/7/2026

APPROVED BY: RK	
DATE: 05/2026	
DESIGNED BY: SLJ	
DRAWN BY: RHW	
SURVEYED BY: WESTERN GROUP CONSULTANTS FB NO. P-6414	

STATE OF TEXAS · STACY L. JORDAN · 148233 · LICENSED PROFESSIONAL ENGINEER · 05.12.2026

CITY OF HOUSTON
HOUSTON PUBLIC WORKS

SCOTT STREET NO. 1 LIFT STATION REHABILITATION
ELECTRICAL

OVERALL EXISTING SITE AND TEMPORARY PLAN

WBS NUMBER	FOR CITY OF HOUSTON USE ONLY
R-000267-127A-4	
DRAWING SCALE	
AS NOTED	
CITY OF HOUSTON PM	
TAHA LOTIA	
DWG NO. 0-E-04	
SHEET NO. 125 OF 220	

D:\Kalluri Group, Inc\KGI - Documents\4285-QEL (Scott Street LS)\Drawings\Electrical\0-E-04 -10 -11 Electrical Site Plans.dwg

ORIGINAL SCALE IN INCHES FOR REDUCED PLANS

NO.	DATE	REVISIONS	APP.

NOTES:

1. CONTRACTOR SHALL COORDINATE THE TEMPORARY ELECTRIC UTILITY SERVICE WITH CENTERPOINT ENERGY. THE EXISTING SERVICE SHALL DE-ENERGIZED EARLY IN THE THE PROJECT, ESTABLISHING THE TEMPORARY FACILITIES IS REQUIRED PRIOR TO START OF DEMOLITION WORK.
2. UNDERGROUND CONDUIT, EXPOSED CONDUIT, TEMPORARY RACKS, AND AN OVERHEAD LINE SYSTEM IS REQUIRED FOR POWER, CONTROL AND SCADA TO FEED CRITICAL SYSTEMS, DURING CONSTRUCTION, TESTING AND ACCEPTANCE.
3. THE EXISTING, OR A VENDOR SUPPLIED, TEMPORARY ODOR CONTROL FACILITY IS TO BE PROVIDED TEMPORARY POWER AND CONTROL WHERE SHOWN ON THE PLANS. THE TEMPORARY FACILITIES WILL BE REQUIRED FOR AN EXTENDED PERIOD OF SERVICE. CONTRACTOR SHALL COORDINATE ALL ASPECTS OF THE CHOSEN TEMPORARY SYSTEM TO ENSURE ACCEPTABLE OPERATION.
4. THE CONTRACTOR SHALL PROVIDE A TEMPORARY POWER PANEL IN THE LIFT STATION ELECTRICAL ROOM TO SERVE TEMPORARY LIGHTING, TEMPORARY VENTILATION, SUMP PUMPS, CRITICAL EQUIPMENT, CONTROL AND SCADA CIRCUITS. THE PANEL SHALL REMAIN IN SERVICE DURING THE ENTIRE CONSTRUCTION PROCESS. NEW FACILITIES ARE TO BE IN SERVICE CONCURRENTLY WITH TEMPORARY FACILITIES THROUGH TESTING AND COMMISSIONING.

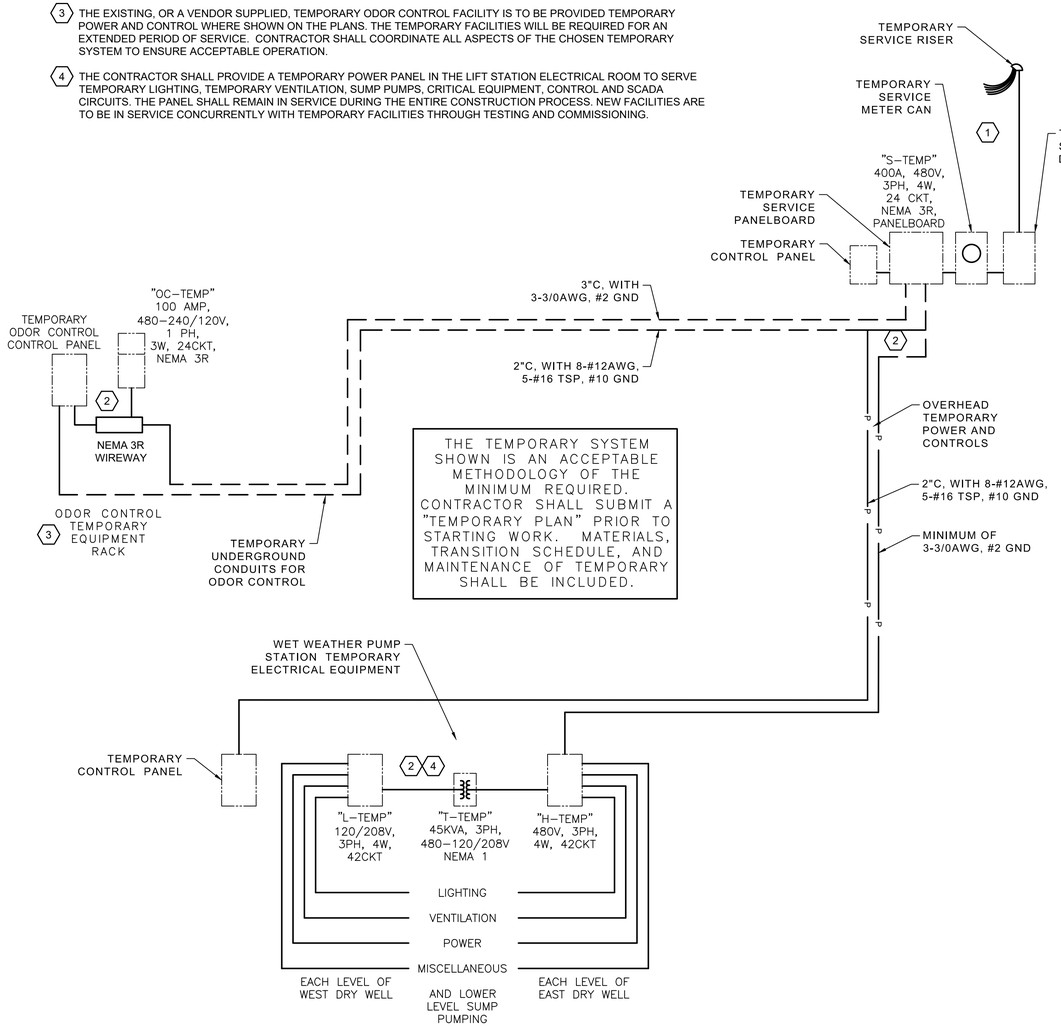

TEMPORARY SITE POWER

DIAGRAM

NONE

TEMPORARY SYSTEMS NOTES:

A. THIS DRAWING IS PROVIDED TO ILLUSTRATE AND DEFINE THE MINIMUM TEMPORARY CENTERPOINT ELECTRIC SERVICE REQUIRED FOR PROJECT CONSTRUCTION POWER. DATA FOR THE TEMPORARY EQUIPMENT, REQUIRED TO SERVE THE CONSTRUCTION, CONDUIT AND CONDUCTORS ARE ALSO SHOWN. NOT ALL TEMPORARY POWER REQUIRED FOR THE CONTRACTOR'S NEEDS ARE ILLUSTRATED HERE, OFFICE TRAILERS, FABRICATION AREAS AND CONTRACTOR SECURITY POWER MAY UTILIZE THIS SERVICE. CONTRACTOR SHALL CALCULATE THE TOTAL TEMPORARY REQUIRED AND ADJUST EQUIPMENT TO TOTAL NEEDS. ALL TEMPORARY FACILITIES SHALL BE PROVIDED AND INSTALLED IN COMPLIANCE WITH CENTERPOINT SERVICE STANDARDS, OSHA AND NEC ARTICLE 590.

B. TEMPORARY PROVISIONS REQUIRED INCLUDE BUT ARE NOT LIMITED TO POWER (480V & 120V), CONTROLS (TEMPORARY STARTERS/CONTACTORS), SCADA (PLC I/O) AND COMMUNICATIONS (CAT5 OR FIBER) FOR FACILITY TEMPORARY ODOR CONTROL SYSTEM SUPPORT SHALL ALL BE PROVIDED.

C. "CONSTRUCTION" TEMPORARY IS ALSO REQUIRED IN THE WET WEATHER STATION FOR OSHA WORKPLACE SAFETY. EXTENSION CORDS SHALL NOT, BE ROUTED DOWN STAIRWELLS DURING CONSTRUCTION, EXISTING PANELBOARD CIRCUIT CONDUIT AND CONDUCTORS MAY BE PROVIDED TEMPORARY CONNECTION FOR CONVENIENCE POWER. EXISTING LIGHTING SHALL NOT BE USED FOR TEMPORARY. IT IS NOT ADEQUATE FOR CONSTRUCTION, "STRINGS" OF TEMPORARY LIGHTING ARE REQUIRED IN STAIRWAYS AND ON EACH LEVEL OF THE STATION. TEMPORARY CONNECTION TO SITE LIGHTING IS REQUIRED, DUCT BANKS ARE TO BE REMOVED AND SITE LIGHTING SHALL BE MAINTAINED.

D. TWO TEMPORARY LOWER LEVEL SUMP PUMPING SYSTEMS SHALL BE PROVIDED TO MAINTAIN A DRY LOWER LEVEL, NO ADDITIONAL FUNDS SHALL BE ALLOWED FOR THESE TEMPORARY FACILITIES.

E. A CONTINUOUSLY OPERATIONAL OSHA COMPLIANT TEMPORARY VENTILATION SYSTEM SHALL BE PROVIDED, FOR DURATION OF CONSTRUCTION, TO SERVE ALL LEVELS OF THE DRY WELL.

F. CONTRACTOR SHALL NOTIFY PROJECT MANAGEMENT, UPON DISCOVERY, OF ANY DEVIATIONS FROM THE CONTRACT DRAWINGS, EXPOSED IN "AS FOUND" RESEARCH.

G. CONTRACTOR HAS TASKS, IN THIS PROJECT, IN NEAR PROXIMITY TO CNP OVERHEAD POWER LINES. CONTRACTOR SHALL FOLLOW NEC AND CNP STANDARDS FOR SAFE WORKING DISTANCE, INCLUDING TEMPORARY OVERHEAD SIGNAGE AND PROCEDURES.

THE EXISTING PANELBOARD SCHEDULE IS SHOWN FOR GENERAL INFORMATION AND USAGE FOR TEMPORARY CONNECTIONS.

EXISTING PANEL "LLA"

CKT. DESCRIPTION	LOAD	BKR.	A	B	C	BKR.	LOAD	CKT. DESCRIPTION
ELECTRICAL ROOM LIGHTING	800	20	1		2	20	600	STAIRWELL LIGHTING
ELECTRICAL ROOM LIGHTING	800	20	3		4	20	500	DRAIN PUMP & STORAGE LIGHTING
ELECTRICAL ROOM RECEPTACLES	1200	20	5		6	20	400	DRAIN PUMP & STORAGE RECEPT
MECHANICAL ROOM LIGHTING	800	20	7		8	20	800	MCC SPACE HEATERS
MECHANICAL RM EXIT/EMER LIGHTS	600	20	9		10	20	–	ELECTRICAL ROOM AIR COMPRESSOR
MECHANICAL ROOM RECEPTACLES	1200	20	11		12	20	800	BATHROOM BASEBOARD HEATER
MOTOR ROOM WEST LIGHTING	1400	20	13		14	20	1500	HOT WATER HEATER
MOTOR ROOM WEST RECEPTACLES	400	20	15		16	20	500	IRRIGATION CONTROLLER
MOTOR ROOM EAST LIGHTING	1400	20	17		18	30	500	TEMPURATURE CONTROL TCP-1
MOTOR ROOM EAST RECEPTACLES	400	20	19		20	30	1500	DRINKING WATER FOUNDATION
PUMP ROOM WEST LIGHTING	1100	20	21		22	20	1000	AIR HAND DRYER
PUMP ROOM WEST RECEPTACLES	400	20	23		24	20	600	CHEMICAL FEED SYSTEM
PUMP ROOM EAST LIGHTING	1100	20	25		26	20	600	EXHAUST FANS 5&6
PUMP ROOM EAST RECEPTACLES	400	20	27		28	20	400	EXHAUST FANS 7&8
OUTDOOR BUILDING LIGHTING	800	20	29		30	20	–	LIGHTING CONTROLS
OUTDOOR SITE LIGHTING	1000	20	31		32	20	–	ELEVATOR CAB LIGHTING
ELEVATOR EQUIP RM A/C UNIT	400	20	33		34	20	–	ELEVATOR PIT LIGHTING
SPARE	600	20	35		36	20	900	SPARE
WET WEATHER CONTROL PANEL	900	20	37		38	20	–	SPARE
UPS SYSTEM	1800	20	39		40	20	–	SPARE
LEVEL TRANSMITTERS	–	20	41		42	20	–	SPARE

EXISTING PANELBOARD LLA

CIRCUIT SCHEDULE

NONE

NOTICE:
FOR YOUR SAFETY, YOU ARE REQUIRED BY TEXAS LAW TO CALL 811 AT LEAST 48 HOURS BEFORE YOU DIG SO THAT UNDERGROUND LINES CAN BE MARKED. THIS SIGNATURE DOES NOT FULFILL YOUR OBLIGATION TO CALL 811

VERIFICATION OF PRIVATE UTILITY LINES

Date:

CenterPoint Energy natural gas utilities shown.
(Gas services lines are not shown). This signature not to be used for conflict verification.
Signature Valid for six months.

Date:

CenterPoint Energy / UNDERGROUND Electrical Facilities Verification ONLY.
(This Signature verifies existing underground facilities - not to be used for conflict verification.)
Signature Valid for six months.

Date:

Approved for AT&T Texas / SWBT underground conduit facilities only.
Signature valid for one year.

KGI Kalluri Group, Inc.
TBPE Registration No. F-665
16300 Katy Freeway, Suite 172
Houston, Texas 77094
Phone: (713)-365-9288
PROJECT 4285

QUIDDITY
Texas Board of Professional Engineers and Land Surveyors Reg. No. F-23290
6330 West Loop South, Suite 150 • Bellaire, TX 77401 • 713.777.5337

JOB NO: 00050-0099-01 DATE: 5/7/2026

APPROVED BY: RK

DATE: 05/2026

DESIGNED BY: SLJ

DRAWN BY: RHW

SURVEYED BY: WESTERN GROUP CONSULTANTS
FB NO. P-6414

STATE OF TEXAS
STACY L. JORDAN
148233
LICENSED PROFESSIONAL ENGINEER
06.12.2026

CITY OF HOUSTON
HOUSTON PUBLIC WORKS

SCOTT STREET NO. 1 LIFT STATION REHABILITATION

ELECTRICAL

TEMPORARY SITE POWER RISER DIAGRAM

WBS NUMBER	FOR CITY OF HOUSTON USE ONLY
R-000267-127A-4	
DRAWING SCALE	
AS NOTED	
CITY OF HOUSTON PM	
TAHA LOTIA	
DWG NO. 0-E-05	
SHEET NO. 126 OF 220	

F:\Users\KGI-StacyJordan\Kalluri Group, Inc\KGI - Documents\4285-QEL (Scott Street LS)\Drawings\Electrical\0-E-05 Temporary Site Power Riser Diagram.dwg

ORIGINAL SCALE IN INCHES FOR REDUCED PLANS

NO.	DATE	REVISIONS	APP.

"S-TEMP" TEMPORARY SERVICE PANELBOARD IS TO BE LOCATED ON A RACK NEAR THE TEMPORARY ELECTRICAL SERVICE

PANEL "S-TEMP"

BUS AMPS 400
MAIN BRKR. AMPS 400 WIRE SIZE 500 KCMIL
VOLTS 480/277 AIC 65 KA
PHASE 3 WIRE 4 SN ✓

400A

NOTES:
1. PANEL ENCLOSURE SHALL BE NEMA 3R.
2. SOLID NEUTRAL AND GROUND BAR SHALL BE INSTALLED.
3. CIRCUIT SCHEDULE SHALL BE MAINTAINED.

CKT. DESCRIPTION	WIRE	LOAD	BKR.	A	B	C		BKR.	LOAD	WIRE	CKT. DESCRIPTION
WET WEATHER STATION	3/0	75000	200	1			2	50	6000	6	ODOR CONTROL
	3/0	75000		3			4			6	
	3/0	75000		5			6				
				7			8				
				9			10				
				11			12	20	60	12	TEMP CONTROL PANEL CPT

TOTAL VA = 81,000
81 KVA AT 3 PHASE 480V = 97.4 AMPS
THE CONDUCTORS, PANEL, AND MAIN BREAKER ARE ALL RATED PROPERLY TO SERVE THE LOAD

"H-TEMP" TEMPORARY PANELBOARD IS TO BE LOCATED ON A RACK (NOT A WALL) IN THE WET WEATHER STATION ELECTRICAL ROOM

PANEL "H-TEMP"

BUS AMPS 200
MAIN BRKR. AMPS 200 WIRE SIZE 3/0 AWG
VOLTS 480/277 AIC 65 KA
PHASE 3 WIRE 3 SN ✓

200A

NOTES:
1. PANEL ENCLOSURE SHALL BE NEMA 3R.
2. SOLID NEUTRAL AND GROUND BAR SHALL BE INSTALLED.
3. CIRCUIT SCHEDULE SHALL BE MAINTAINED.

CKT. DESCRIPTION	WIRE	LOAD	BKR.	A	B	C		BKR.	LOAD	WIRE	CKT. DESCRIPTION
EAST SUMP PUMPS	10	1500	30	1			2	30	1500	10	WEST SUMP PUMPS
	10			3			4			10	
	10			5			6			10	
TEMPORARY FRESH AIR BLOWER	8	27000	20	7			8	60	45000	6	XFMR "T-TEMP" (45kVA)
	8			9			10			6	
	8			11			12			6	
		28500							46500		

TOTAL VA = 75,000
75 KVA AT 3 PHASE 480V = 90.2 AMPS
THE CONDUCTORS, PANEL, AND MAIN BREAKER ARE ALL RATED PROPERLY TO SERVE THE LOAD

"OC-MPC" TEMPORARY MINI-POWER CENTER PANELBOARD IS TO BE LOCATED AT THE TEMPORARY ODOR CONTROL EQUIPMENT RACK

PANEL "OC-TEMP"

MAIN BRKR. AMPS 50
TRANSFORMER 15KVA
VOLTS 120/240 AIC 18 KA
PHASE 1 WIRE 2 SN ✓

50
80

NOTES:
1. PANEL ENCLOSURE SHALL BE NEMA 3R.
2. SOLID NEUTRAL AND GROUND BAR SHALL BE INSTALLED.
3. CIRCUIT SCHEDULE SHALL BE MAINTAINED.

CKT. DESCRIPTION	WIRE	LOAD	BKR.			BKR.	LOAD	WIRE	CKT. DESCRIPTION
ODOR CONTROL PANEL	12	400	20	1	2	20	400	12	LIGHTING
ODOR CONTROL BLOWER	8	5600	50	3	4	20	360	12	RECEPTACLES
	8			5	6	20			SPARE
SPARE			20	7	8	20			SPARE
SPACE				9	10				SPACE
				11	12				
				13	14				
				15	16				
				17	18				
				19	20				
				21	22				
				23	24				
				25	26				
		6000					760		

TOTAL VA = 6,760
6.8 KVA AT 240V = 28.3 AMPS
THE CONDUCTORS, PANEL, AND MAIN BREAKER ARE ALL RATED PROPERLY TO SERVE THE LOAD

"L-TEMP" TEMPORARY PANELBOARD IS TO BE LOCATED ON A RACK (NOT A WALL) IN THE WET WEATHER STATION ELECTRICAL ROOM

PANEL "L-TEMP"

BUS AMPS 150
MAIN BRKR. AMPS 150 WIRE SIZE 1/0 AWG
VOLTS 208/120 AIC 10 KA
PHASE 3 WIRE 4 SN ✓

150

NOTES:
1. PANEL ENCLOSURE SHALL BE NEMA 3R.
2. SOLID NEUTRAL AND GROUND BAR SHALL BE INSTALLED.
3. CIRCUIT SCHEDULE SHALL BE MAINTAINED.

CKT. DESCRIPTION	WIRE	LOAD	BKR.	A	B	C		BKR.	LOAD	WIRE	CKT. DESCRIPTION
TEMPORARY LIGHTING	12	1600	20	1			2	20	1600	12	TEMPORARY LIGHTING
TEMPORARY LIGHTING	12	1600	20	3			4	20	1600	12	TEMPORARY LIGHTING
TEMPORARY LIGHTING	12	1600	20	5			6	20	1600	12	TEMPORARY LIGHTING
TEMPORARY RECEPTICALES	12	720	20	7			8	20	720	12	TEMPORARY RECEPTICALES
TEMPORARY RECEPTICALES	12	720	20	9			10	20	720	12	TEMPORARY RECEPTICALES
TEMPORARY RECEPTICALES	12	720	20	11			12	20	720	12	TEMPORARY RECEPTICALES
SPARE			20	13			14	20			SPARE
			20	15			16	20			
			20	17			18	20			
			20	19			20	20			
			20	21			22	20			
			20	23			24	20			
			20	25			26	20			
			20	27			28	20			
			20	29			30	20			
		6960							6960		

TOTAL VA = 13,920
13.92 KVA AT 240V = 33.5 AMPS
THE CONDUCTORS, PANEL, AND MAIN BREAKER ARE ALL RATED PROPERLY TO SERVE THE LOAD

NOTICE:
FOR YOUR SAFETY, YOU ARE REQUIRED BY TEXAS LAW TO CALL 811 AT LEAST 48 HOURS BEFORE YOU DIG SO THAT UNDERGROUND LINES CAN BE MARKED. THIS SIGNATURE DOES NOT FULFILL YOUR OBLIGATION TO CALL 811

VERIFICATION OF PRIVATE UTILITY LINES

Date:

CenterPoint Energy natural gas utilities shown.
(Gas services lines are not shown). This signature not to be used for conflict verification.
Signature Valid for six months.

Date:

CenterPoint Energy / UNDERGROUND Electrical Facilities Verification ONLY.
(This Signature verifies existing underground facilities - not to be used for conflict verification.)
Signature Valid for six months.

Date:

Approved for AT&T Texas / SWBT underground conduit facilities only.
Signature valid for one year.

KGI Kalluri Group, Inc.
TBPE Registration No. F-665
16300 Katy Freeway, Suite 172
Houston, Texas 77094
Phone: (713)-365-9288
PROJECT 4285

QUIDDITY
Texas Board of Professional Engineers and Land Surveyors Reg. No. F-23290
6330 West Loop South, Suite 150 • Bellaire, TX 77401 • 713.777.5337

JOB NO: 00050-0099-01 DATE: 5/7/2026

APPROVED BY: RK
DATE: 05/2026
DESIGNED BY: SLJ
DRAWN BY: RHW
SURVEYED BY: WESTERN GROUP CONSULTANTS
FB NO. P-6414

STATE OF TEXAS
STACY L. JORDAN
148233
LICENSED
PROFESSIONAL ENGINEER
06.12.2026

CITY OF HOUSTON
HOUSTON PUBLIC WORKS

SCOTT STREET NO. 1
LIFT STATION REHABILITATION
ELECTRICAL

TEMPORARY PANELBOARD SCHEDULES

WBS NUMBER	FOR CITY OF HOUSTON USE ONLY
R-000267-127A-4	
DRAWING SCALE	
AS NOTED	
CITY OF HOUSTON PM	
TAHA LOTIA	
DWG NO. 0-E-06	
SHEET NO. 127 OF 220	

F:\Users\KGI-StacyJordan\Kalluri Group, Inc\KGI - Documents\4285-QEL (Scott Street LS)\Drawings\Electrical\0-E-06 Temporary Panelboard Schedules.dwg

ORIGINAL SCALE IN INCHES FOR REDUCED PLANS

NO.	DATE	REVISIONS	APP.

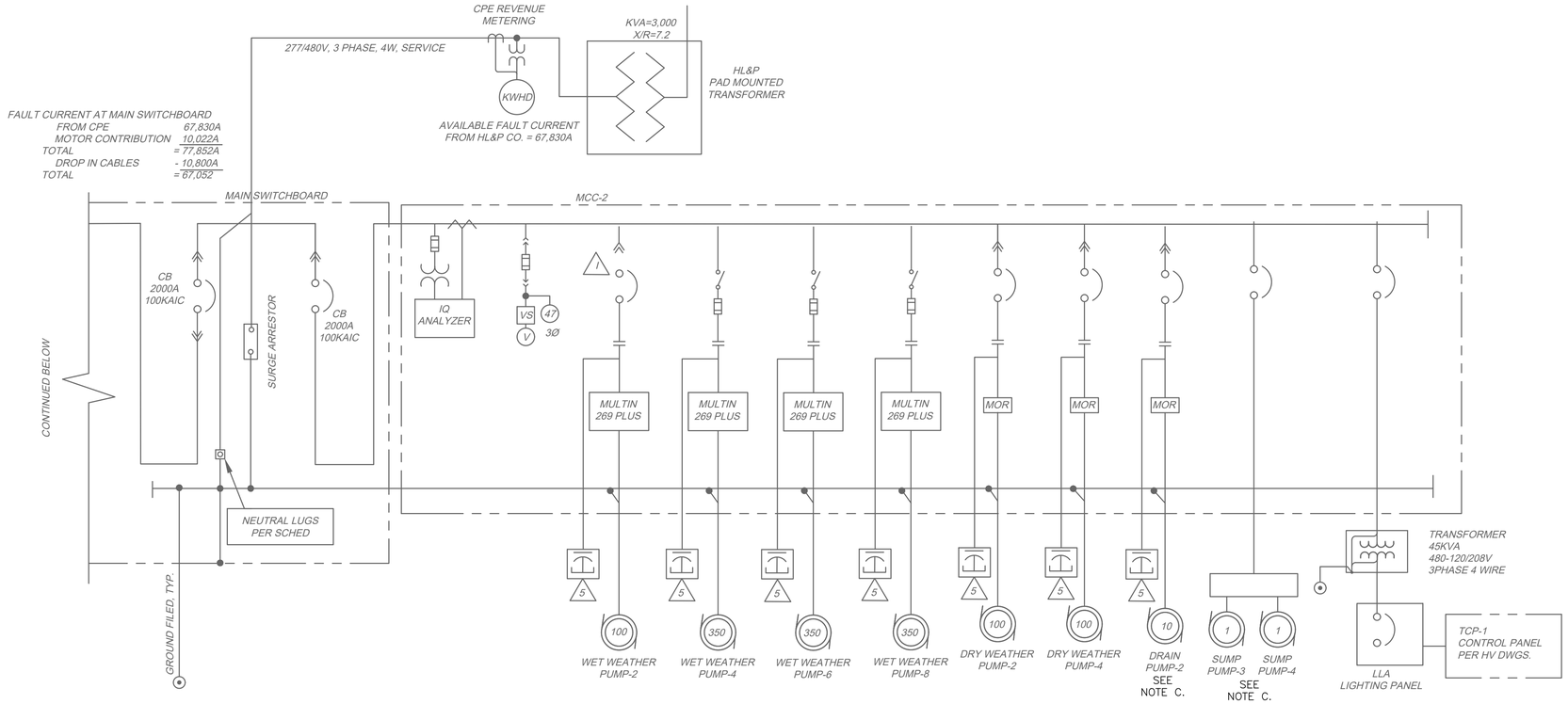

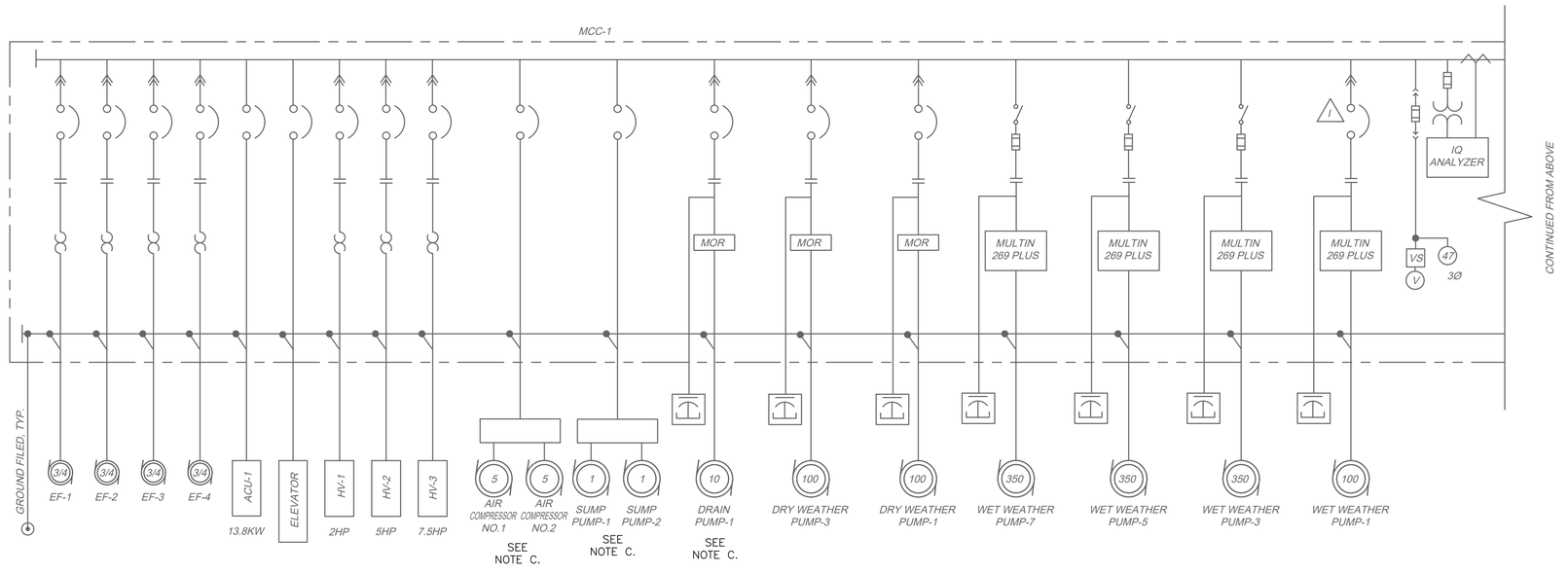

EXISTING OVERALL ONE LINE

DIAGRAM

NONE

GENERAL NOTES:

A. THIS OVERALL ONE LINE DIAGRAM ILLUSTRATES THE EXISTING ELECTRICAL SYSTEM. ALL OF THE ELECTRICAL EQUIPMENT IS TO BE REMOVED AND REPLACED. IT DOES NOT SHOW ALL EQUIPMENT TO BE REMOVED, AND IS SIMPLIFIED, IT PROVIDES FAMILIARITY WITH THE PROJECT.

B. CONTRACTOR SHALL PROVIDE EXTENDED CONTINUOUS TEMPORARY POWER FOR, BUT NOT LIMITED TO; SITE ODOR CONTROL, SITE LIGHTING, WET WEATHER STATION INTERIOR LIGHTING, OSHA COMPLIANT DRY WELL VENTILATION, AND CONSTRUCTION TOOLS DURING THE BYPASS PUMPING POWER OUTAGES.

C. THE AIR COMPRESSOR, EAST AND WEST DRY WELL SUMP PUMPS, AND BOTH DRAIN PUMPS SHALL BE DISCONNECTED FROM EXISTING POWER AND PROVIDED TEMPORARY AND PROPOSED POWER AND CONTROL PROVISIONS.

D. COORDINATE EXISTING TRANSFORMER WORK WITH CPE.

KGI Kalluri Group, Inc.
TBPE Registration No. F-665
16300 Katy Freeway, Suite 172
Houston, Texas 77094
Phone: (713)-365-9288
PROJECT 4285

QUIDDITY
Texas Board of Professional Engineers and Land Surveyors Reg. No. F-23290
6330 West Loop South, Suite 150 • Bellaire, TX 77401 • 713.777.5337

JOB NO: 00050-0099-01 DATE: 5/7/2026

APPROVED BY: RK

DATE: 05/2026

DESIGNED BY: SLJ

DRAWN BY: RHW

SURVEYED BY: WESTERN GROUP CONSULTANTS
FB NO. P-6414

STATE OF TEXAS
STACY L. JORDAN
148233
LICENSED PROFESSIONAL ENGINEER
05.12.2026

CITY OF HOUSTON
HOUSTON PUBLIC WORKS

SCOTT STREET NO. 1 LIFT STATION REHABILITATION

ELECTRICAL

OVERALL ONE LINE DIAGRAM - EXISTING

WBS NUMBER	FOR CITY OF HOUSTON USE ONLY
R-000267-127A-4	
DRAWING SCALE	
AS NOTED	
CITY OF HOUSTON PM	
TAHA LOTIA	
DWG NO. 0-E-07	
SHEET NO. 128 OF 220	

F:\Users\KGI-StacyJordan\Kalluri Group, Inc\KGI - Documents\4285-QEL (Scott Street LS)\Drawings\Electrical\0-E-07 Overall One Line Diagram - Existing.dwg

0 1 2 3 4 5 ORIGINAL SCALE IN INCHES FOR REDUCED PLANS

TAG	DESCRIPTION	ROUTING		CONDUIT & WIRE SIZES
		FROM	TO	
A	MAIN BONDING JUMPER	MCC NEUTRAL	MCC GROUND	#4/0 CU
B	EQUIPMENT BONDING JUMPER	MCC GROUND	MCC ENCLOSURE	#4/0 CU
100	SERVICE ENTRANCE	HL&LP SERVICE	MOTOR CONTROL CENTER	3 #750 MCM, #2/0 NEUT & #2/0 GND IN EA OF 9 - 4" RGS
101	LIGHTING DOWN LEAD, TYP	LIGHTNING ARRESTOR	LIGHTNING GROUND FIELD	#2/0 LIGHTING DOWN LEAD
102	TELEPHONE SERVICE	SWB SERVICE (35 KV TERMINAL POLE)	TELEP-ONE TERMINAL CABINET	2" PVC RGS - TELEPHONE
200	DRY WEATHER PUMP NO.1 POWER	DRY WEATHER PUMP NO.1	PUMP NO.1 TERMINAL CABINET	3/C #2/0 8, #6 GND CABLE-3 PVC RGS PER PUMP MFG CABLE SIZE
201	DRY WEATHER PUMP NO.1 CONTROLS	DRY WEATHER PUMP NO.1	PUMP NO.1 TERMINAL CABINET	9/C #14 (8 CONTROL - GND)1 1/2PVC RGS NOTES2
202	DRY WEATHER PUMP NO.1 POWER	DRY WEATHER PUMP NO.1 TERMINAL CABINET	PUMP STARTER	3 #2/0 & #6 GND- 3" RGS
203B	DRY WEATHER PUMP NO.1 CONTROLS	TERMINAL CABINET	PUMP STARTER	7 #14 (4 CONTROL, 1 GND & 2 SPARE)-1" PVC GRGS
204	DRY WEATHER PUMP NO.1 CONTROLS	STARTER N MOTOR CONTROL CENTER	172-LCP-1 CONTROL PANEL	1 SHIELDED PAR #16- 3/4" RGS
205	DRY WEATHER PUMP NO.1 CONTROLS	STARTER N MOTOR CONTROL CENTER	172-LCP-1 CONTROL PANEL	20#14 (4 SPARE), 2 #12(CT) & #14 GND - 1 1/2" PVC RGS
206	DRY WEATHER PUMP NO.1 CAPACITOR	DRY WEATHER PUMP NO.1 MOTOR STARTER	POWER FACTOR CORRECTION CAPACITOR	3/C #4 & #6 GND CABLE- 1" RGS
207	COMBINED CURRENT TRANSMITTERS	MOTOR CONTROL CENTER	172-LCP-1 CONTROL PANEL	3 2/C SIG CABLE - 1"RGS
300	DRY WEATHER PUMP NO.2 POWER	DRY WEATHER PUMP NO.2	PUMP NO.2 TERMINAL CABINET	3/C #2/0 & #6 GND CABLE - 3" PVC RGS NOTE 2
301	DRY WEATHER PUMP NO.2 CONTROLS	DRY WEATHER PUMP NO.2	PUMP NO.2 TERMINAL CABINET	9/C #14 (8 CONTROL + GND)-1 1/2" PVC RGS NOTE2
302	DRY WEATHER PUMP NO.2 POWER	DRY WEATHER PUMP NO.2 TERMINAL CABINET	PUMP STARTER	3 #2/0 & #6 GND - 3" RGS
303	DRY WEATHER PUMP MAIN-CONTROLS	172-LCP-1 CONTROL PANEL	PT-172-01,PT-172-02	2 SH. PR. #16-1" PVC RGS
304	DRY WEATHER PUMP NO.2 CONTROLS	STARTER IN MOTOR CONTROL CENTER	172-LCP-1 CONTROL PANEL	1 SHIELED PAIR #16 - 3/4" RGS
305	DRY WEATHER PUMP NO.2 CONTROLS	STARTER IN MOTOR CONTROL CENTER	172-LCP-1 CONTROL PANEL	20 #14(4 SPARE #12(CT) & #14 GND - 1 1/2" PVC RGS)
306	DRY WEATHER PUMP NO.2 CAPACITOR	DRY WEATHER PUMP NO.2 MOTOR STARTER	POWER FACTOR CORRECTION CAPACITOR	3/C #4 & #6 GND CABLE - 1" RGS
400	DRY WEATHER PUMP NO.3 POWER	DRY WEATHER PUMP NO.3	PUMP NO.3 TERMINAL CABINET	3/C #2/0 & #6 GND CABLE - 3" PVC RGS NOTE 2
401	DRY WEATHER PUMP NO.3 CONTROLS	DRY WEATHER PUMP NO.3	PUMP NO.3 TERMINAL CABINET	9/C #14(8 CONTROL - GND) - 1 1/2" PVC RGS NOTE 2
402	DRY WEATHER PUMP NO.3 POWER	DRY WEATHER PUMP NO.3 TERMINAL CABINET	PUMP STARTER	3 #2/0& #6 GND - 3 " RGS
403A	DRY WEATHER PUMP NO.3 CONTROLS	TERMINAL CABINET	PUMP STARTER	7 #14 (4 CONTROL, 1 GND & 2 SPARE)- 1" PVC RGS
404	DRY WEATHER PUMP NO.3 CONTROLS	STARTER IN MOTOR CONTROL CENTER	172-LCP-1 CONTROL PANEL	1 SHIELDED PAIR #16 - 3/4" RGS
405	DRY WEATHER PUMP NO.3 CONTROLS	STARTER IN MOTOR CONTROL CENTER	172-LCP-1 CONTROL PANEL	20 #14 (4 SPARE), 2 #12(CT) & #14 GND - 1 1/2" PVC RGS
406	DRY WEATHER PUMP NO.3 CAPACITOR	DRY WEATHER PUMP NO.3 MOTOR STARTER	POWER FACTOR CORRECTION CAPACITOR	3/C #6 & #8 GND CABLE - 1" RGS
500	DRY WEATHER PUMP NO.4 POWER	DRY WEATHER PUMP NO.4	PUMP NO.4 TERMINAL CABINET	3/C #2/0 & #6 GND CABLE - 3" PVC RGS NOTE 2
501	DRY WEATHER PUMP NO.4 CONTROLS	DRY WEATHER PUMP NO.4	PUMP NO.4 TERMINAL CABINET	9/C #14 (8 CONTROL + GND)- 1 1/2" PVC RGS
502	DRY WEATHER PUMP NO.4 POWER	DRY WEATHER PUMP NO.4 TERMINAL CABINET	PUMP STARTER	3 #2/0 & #6 GND - 3" RGS
503	NOT USED			NOT USED
504	DRY WEATHER PUMP NO.4 CONTROLS	STARTER N MOTOR CONTROL CENTER	172-LCP-1 CONTROL PANEL	1 SHIELDED PAIR #16 - 3/4" RGS
505	DRY WEATHER PUMP NO.4 CONTROLS	STARTER N MOTOR CONTROL CENTER	172-LCP-1 CONTROL PANEL	20 #14 (4 SPARE, 2 #12(CT) & #14 GND - 1 1/2" PVC RGS)
506	DRY WEATHER PUMP NO.4 CAPACTOR	DRY WEATHER PUMP NO.4 MOTOR STARTER	POWER FACTOR CORRECTION CAPCITOR	3/C #4 & #6 GND CABLE - 1" RGS
600	LIGHTING PANEL FEEDER	MOTOR CONTROL CENTER	LIGHTING TRANSFORMER	3 #2 & #4 GND - 1 1/4" RGS
601	LIGHTING PANEL GROUND	LIGHTING PANEL	GROUND FIELD	#4 GND - 1" RGS
602	LIGHTING TRANSFORMER	LIGHTING TRANSFORMER	LIGHTING PANEL	3 #1/0, #2 GND - 1 1/2" RGS
605	SUMP PUMPS CONTROL PANEL-1	MOTOR CONTROL CENTER	SUMP PUMPS CONTROL PANEL-1 & PUMPS 1 & 2	20 #14 (4 SPARE, 2 #12(CT) & #14 GND - 1 1/2" PVC RGS)
610	SUMP PUMPS CONTROL PANEL-2	MOTOR CONTROL CENTER	SUMP PUMPS CONTROL PANEL-1 & PUMPS 3 & 4	3/C #4 & #6 GND CABLE - 1" RGS
203A	DRY WEATHER PUMP NO.2 CONTROLS	TERMINAL CABINET	PUMP STARTER	7 #14(4 CONTROL, 1 GND,& 2 SPARE)- 1 PVC/RGS
403B	DRY WEATHER PUMP NO.4 CONTROLS	TERMINAL CABINET	PUMP STARTER	7 #14(4 CONTROL, 1 GND,& 2 SPARE)- 1 PVC/RGS
615	DRAIN PUMP-1 POWER	MOTOR CONTROL CENTER	DRAIN PUMP-1	3 #12 & #12 GND - 1" RGS
616	DRAIN PUMP-1 CONTROL	MOTOR CONTROL CENTER	DRAIN PUMP-1 & -S-172-13	6 #14 & #14 GND - 1" RGS
617	DRAIN PUMP-1 CONTROL	MOTOR CONTROL CENTER	172-LCP-2 CONTROL PANEL	15 #14 (4 SPARE),& #14 GND - 14/2" PVC RGS
618	DRAIN PUMP-1 CONTROL	MOTOR CONTROL CENTER	172-LCP-2 CONTROL PANEL	1 SHIELDED PAIR #16 - 3/4" RGS
620	DRAIN PUMP-2 POWER	MOTOR CONTROL CENTER	DRAIN PUMP-2	3 #12 & #12 GND - 1" RGS
621	DRAIN PUMP-2 CONTROL	MOTOR CONTROL CENTER	DRAIN PUMP-2 & HS-172-14	6 #14 & #14 GND - 1" RGS
622	DRAIN PUMP-2 CONTROL	MOTOR CONTROL CENTER	172-LCP-2 CONTROL PANEL	15 #14 (4 SPARE),& #14 GND - 14/2" PVC RGS
623	DRAIN PUMP-2 CONTROL	MOTOR CONTROL CENTER	172-LCP-2 CONTROL PANEL	1 SHIELDED PAIR #16 - 3/4" RGS
625	AIR COMPRESSORS CONTROL PANEL	MOTOR CONTROL CENTER	AIR COMPRESSORS CONTROL PANEL	3 #10 & #10 GND - 1" RGS
630	ELEVATOR	MOTOR CONTROL CENTER	ELEVATOR	3 #6 & #8 GND - 1 1/2" RGS
631				
635	TOP-1 CONTROL	MOTOR CONTROL CENTER	TOP-1	20#14 & #14 GND - 1" RGS
636				
640	HV-1 POWER	MOTOR CONTROL CENTER	HV-1	3 #12 & #12 GND - 1" RGS
641	HV-1 CONTROL	TCP	HV-1	8 #14 & #14 GND - 1" RGS
642	HV-2 POWER	MOTOR CONTROL CENTER	HV-2	3 #12 & #12 GND - 1" RGS
643	HV-2 CONTROL	TCP	HV-2	8 #14 & #14 GND - 1" RGS
644	HV-3 POWER	MOTOR CONTROL CENTER	HV-3	3 #12 & #12 GND - 1" RGS
645	HV-3 CONTROL	TCP	HV-3	8 #14 & #14 GND - 1" RGS
650	EF-1	MOTOR CONTROL CENTER	EF-1	3 #12 & #12 GND - 1" RGS
651	EF-2	MOTOR CONTROL CENTER	EF-2	3 #12 & #12 GND - 1" RGS
652	EF-3	MOTOR CONTROL CENTER	EF-3	3 #12 & #12 GND - 1" RGS
653	EF-4	MOTOR CONTROL CENTER	EF-4	3 #12 & #12 GND - 1" RGS
663				
664				
670	AIR CONDITIONING UNIT - POWER	MOTOR CONTROL CENTER	ACU-1	3 #8 & #8 GND - 1" RGS
671	AIR CONDITIONING UNIT - CONTROL	TCP-1	ACU-1	4 #14 & #14 GND - 1" RGS
680				
681	CHEMICAL FEED SYSTEM - CONTROL	172-LCP-1 CONTROL PANEL(DWCP)	CHEMICAL FEED PUMP PANEL	2 SHIELDED PAIRS #16-1" PVC RGS(PACING SIGNAL)
682	CHEMICAL FEED SYSTEM - CONTROL	172-LCP-1 CONTROL PANEL(DWCP)	LIT-172-01,02,03	4 #14 & #14 GND - 1" RGS(HIGH LEVEL ALARM)
685	CHEMICAL FEED SYSTEM - CONTROL	172-LCP-1 CONTROL PANEL(DWCP)	LIT-172-01,02,03	4 #14 & #14 GND - 1" RGS(LEVEL STATUS)

NO.	DATE	REVISIONS	APP.

GENERAL NOTES:

A. THIS EXISTING CONDUIT AND CONDUCTOR SCHEDULE IS PROVIDED TO HELP IN ESTIMATION OF THE PROJECT CONDUCTOR REMOVALS, TEMPORARY POWER POWER REQUIREMENT AND GENERAL INFORMATION. ALL OF THE EXISTING CONDUCTORS ARE TO BE REMOVED AND REPLACED AS REQUIRED FOR THE PROPOSED EQUIPMENT. IT IS FROM THE ORIGINAL CONSTRUCTION AND MAY NOT SHOW ALL CONDUCTORS TO BE REMOVED, IT DOES PROVIDE FAMILIARITY WITH THE PROJECT.

B. CONTRACTOR SHALL DISPOSE OF ALL MATERIALS IN COMPLIANCE WITH THE SPECIFICATIONS PROCEDURES. PROVIDE ALL TEMPORARY IN COMPLIANCE WITH NEC ARTICLE 580.

NOTICE:
FOR YOUR SAFETY, YOU ARE REQUIRED BY TEXAS LAW TO CALL 811 AT LEAST 48 HOURS BEFORE YOU DIG SO THAT UNDERGROUND LINES CAN BE MARKED. THIS SIGNATURE DOES NOT FULFILL YOUR OBLIGATION TO CALL 811

VERIFICATION OF PRIVATE UTILITY LINES

Date:

CenterPoint Energy natural gas utilities shown.
(Gas services lines are not shown). This signature not to be used for conflict verification.

Signature Valid for six months.

Date:

CenterPoint Energy / UNDERGROUND Electrical Facilities Verification ONLY.
(This Signature verifies existing underground facilities - not to be used for conflict verification.)

Signature Valid for six months.

Date:

Approved for AT&T Texas / SWBT underground conduit facilities only.
Signature valid for one year.

KGI Kalluri Group, Inc.
TBPE Registration No. F-665
16300 Katy Freeway, Suite 172
Houston, Texas 77094
Phone: (713)-365-9288
PROJECT 4285

QUIDDITY
Texas Board of Professional Engineers and Land Surveyors Reg. No. F-23290
6330 West Loop South, Suite 150 • Bellaire, TX 77401 • 713.777.5337

JOB NO: 00050-0099-01 DATE: 5/7/2026

APPROVED BY: RK

DATE: 05/2026

DESIGNED BY: SLJ

DRAWN BY: RHW

SURVEYED BY: WESTERN GROUP CONSULTANTS
FB NO. P-6414

STATE OF TEXAS
STACY L. JORDAN
148233
LICENSED PROFESSIONAL ENGINEER
06.12.2026

CITY OF HOUSTON
HOUSTON PUBLIC WORKS

SCOTT STREET NO. 1
LIFT STATION REHABILITATION
ELECTRICAL

CONDUIT SCHEDULE
SHEET 1 - EXISTING

WBS NUMBER
R-000267-127A-4

DRAWING SCALE
AS NOTED

CITY OF HOUSTON PM
TAHA LOTIA

DWG NO. O-E-08

SHEET NO. 129 OF 220

FOR CITY OF HOUSTON USE ONLY

F:\Users\KGI-StacyJordan\Kalluri Group, Inc\KGI - Documents\4285-QEL (Scott Street LS)\Drawings\Electrical\0-E-08 Conduit Schedule Sheet 1 - Existing.dwg

0 1 2 3 4 5 ORIGINAL SCALE IN INCHES FOR REDUCED PLANS

TAG	DESCRIPTION	ROUTING		CONDUIT & WIRE SIZES
		FROM	TO	
686	CHEMICAL FEED SYSTEM - CONTROL	LIT-172-01	LIT-172-01	1 SHIELD PAIRS #16-1" PVC RGS
687	CHEMICAL FEED SYSTEM - CONTROL	LIT-172-02	LIT-172-02	1 SHIELD PAIRS #16-1" PVC RGS
688	CHEMICAL FEED SYSTEM - CONTROL	LIT-172-03	LIT-172-03	1 SHIELD PAIRS #16-1" PVC RGS
690	CHEMICAL FEED SYSTEM - POWER	172-LCP-1 CONTROL PANEL (DWCP)	CHEMICAL FEED PUMP PANEL 3X	#12 & #12 GND (2H+1N+1G)(PUMP 1 & 2 POWER)
691	CHEMICAL FEED SYSTEM - CONTROL	172-LCP-1 CONTROL PANEL (DWCP)	LIT-172-01,02,03	(SPARE)
692	CHEMICAL FEED SYSTEM - CONTROL	172-LCP-1 CONTROL PANEL (DWCP)	CHEMICAL FEED PUMP PANEL	(SPARE)
900	INTRUSION ALARM	DOOR LIMIT SWITCH	172-LCP-2 CONTROL PANEL	2 #14 & #14 GND - 1"RGS
901	VOLTAGE MONITOR RELAY	MOTOR CONTROL CENTER-2	172-LCP-1 CONTROL PANEL	4 #14 & #14 GND - 1"RGS
902	FORCE MAIN HIGH PRESSURE	PSH-172-01	172-LCP-2 CONTROL PANEL	2-16/2TS CABLES 1" RGS RFI-BE-07
903	VOLTAGE MONITOR RELAY	MOTOR CONTROL CENTER-1	172-LCP-2 CONTROL PANEL	4 #14 & #14 GND - 1"RGS
1000	AIR CELL TUBING	172-LCP-1 CONTROL PANEL	AIR CELL NO.1	2" PVC RGS AIR TUBING
1001	AIR CELL TUBING	172-LCP-1 CONTROL PANEL	AIR CELL NO.2	2" PVC RGS AIR TUBING
1002	AIR CELL TUBING	172-LCP-2 CONTROL PANEL	AIR CELL NO.1	2" PVC RGS AIR TUBING
1003	AIR CELL TUBING	172-LCP-2 CONTROL PANEL	AIR CELL NO.2	2" PVC RGS AIR TUBING
1100	FUTURE SPACE - TO FIELD	MOTOR CONTROL CENTER	PUMP NO.1 TERMINAL CABINET	1" PVC RGS (SPARE)
1101	NOT USED			NOT USED
1110	NOT USED			NOT USED
1200	FUTURE SPACE - TO FIELD	MOTOR CONTROL CENTER	PUMP NO.2 TERMINAL CABINET	(SPARE)
1201	NOT USED			NOT USED
2100	WET WEATHER PUMP NO.1 POWER	WET WEATHER PUMP NO.1	PUMP STARTER IN MCC	3 #2/0 & #6 GND - 3" RGS
2101	WET WEATHER PUMP NO.1 CONTROLS	WET WEATHER PUMP NO.1 & LOCKOUT SWITCH	PUMP STARTER IN MCC	22 #14 ,#14 GND - 1 1/2" RGS
2102	WET WEATHER PUMP NO.1 CONTROLS	STARTER IN MOTOR CONTROL CENTER	172-LCP-2 CONTROL PANEL	22 #14 (4 SPARE),2#12(CT) & #14 GND - 1 1/2" RGS
2103	WET WEATHER PUMP NO.1 CONTROLS	WET WEATHER PUMP NO.1	PUMP STARTER & MULTILIN RELAY IN MCC	7/C #18 SHIELDED TRIADS -3" RGS
2104	WET WEATHER PUMP NO.1 CAPACITOR	WET WEATHER PUMP NO.1 MOTOR STARTER	POWER FACTOR CORRECTION CAPACITOR	3/C #2/0 & #6 GND - 2" RGS
2105	WET WEATHER DSCH VLV. NO.1-CONTROLS	172-LCP-2	172-CV-05	6#14 & #14 GND-1" RGS
2200	WET WEATHER PUMP NO.2 POWER	WET WEATHER PUMP NO.2	PUMP STARTER IN MCC	3 #350 MCM & #2/0 GND IN EA OF 2 - 3" RGS
2201	WET WEATHER PUMP NO.2 CONTROLS	WET WEATHER PUMP NO.2 & LOCKOUT SWITCH	PUMP STARTER IN MCC	22 #14 ,#14 GND - 1 1/2" RGS
2202	WET WEATHER PUMP NO.2 CONTROLS	STARTER IN MOTOR CONTROL CENTER	172-LCP-2 CONTROL PANEL	22 #14 (4 SPARE),2#12(CT) & #14 GND - 1 1/2" RGS
2203	WET WEATHER PUMP NO.2 CONTROLS	WET WEATHER PUMP NO.2	PUMP STARTER & MULTILIN RELAY IN MCC	7/C #18 SHIELDED TRIADS -3" RGS
2204	WET WEATHER PUMP NO.2 CAPACITOR	WET WEATHER PUMP NO.2 MOTOR STARTER	POWER FACTOR CORRECTION CAPACITOR	3/C #2/0 & #6 GND - 2" RGS
2205	WET WEATHER DSCH VLV. NO.2-CONTROLS	172-LCP-2	172-CV-06	6#14 & #14 GND-1" RGS
2300	WET WEATHER PUMP NO.3 POWER	WET WEATHER PUMP NO.3	PUMP STARTER IN MCC	3 #350 MCM & #2/0 GND IN EA OF 2 - 3" RGS
2301	WET WEATHER PUMP NO.3 CONTROLS	WET WEATHER PUMP NO.3 & LOCKOUT SWITCH	PUMP STARTER IN MCC	22 #14 ,#14 GND - 1 1/2" RGS
2302	WET WEATHER PUMP NO.3 CONTROLS	STARTER IN MOTOR CONTROL CENTER	172-LCP-2 CONTROL PANEL	22 #14 (4 SPARE),2#12(CT) & #14 GND - 1 1/2" RGS
2303	WET WEATHER PUMP NO.3 CONTROLS	WET WEATHER PUMP NO.3	PUMP STARTER & MULTILIN RELAY IN MCC	8/C #18 SHIELDED TRIADS -3" RGS
2304	WET WEATHER PUMP NO.3 CAPACITOR	WET WEATHER PUMP NO.3 MOTOR STARTER	POWER FACTOR CORRECTION CAPACITOR	3/C #2/0 & #6 GND - 2" RGS
2305	WET WEATHER DSCH VLV. NO.3-CONTROLS	172-LCP-2	172-CV-07	6#14 & #14 GND-1" RGS
2400	WET WEATHER PUMP NO.4 POWER	WET WEATHER PUMP NO.4	PUMP STARTER IN MCC	3 #350 MCM & #2/0 GND IN EA OF 2 - 3" RGS
2401	WET WEATHER PUMP NO.4 CONTROLS	WET WEATHER PUMP NO.4 & LOCKOUT SWITCH	PUMP STARTER IN MCC	22 #14 ,#14 GND - 1 1/2" RGS
2402	WET WEATHER PUMP NO.4 CONTROLS	STARTER IN MOTOR CONTROL CENTER	172-LCP-2 CONTROL PANEL	22 #14 (4 SPARE),2#12(CT) & #14 GND - 1 1/2" RGS
2403	WET WEATHER PUMP NO.4 CONTROLS	WET WEATHER PUMP NO.4	PUMP STARTER & MULTILIN RELAY IN MCC	8/C #18 SHIELDED TRIADS -3" RGS
2404	WET WEATHER PUMP NO.4 CAPACITOR	WET WEATHER PUMP NO.4 MOTOR STARTER	POWER FACTOR CORRECTION CAPACITOR	3/C #2/0 & #6 GND - 2" RGS
2405	WET WEATHER DSCH VLV. NO.4-CONTROLS	172-LCP-2	172-CV-08	6#14 & #14 GND-1" RGS
2500	WET WEATHER PUMP NO.5 POWER	WET WEATHER PUMP NO.5	PUMP STARTER IN MCC	3 #350 MCM & #2/0 GND IN EA OF 2 - 3" RGS
2501	WET WEATHER PUMP NO.5 CONTROLS	WET WEATHER PUMP NO.5 & LOCKOUT SWITCH	PUMP STARTER IN MCC	22 #14 ,#14 GND - 1 1/2" RGS
2502	WET WEATHER PUMP NO.5 CONTROLS	STARTER IN MOTOR CONTROL CENTER	172-LCP-2 CONTROL PANEL	22 #14 (4 SPARE),2#12(CT) & #14 GND - 1 1/2" RGS
2503	WET WEATHER PUMP NO.5 CONTROLS	WET WEATHER PUMP NO.5	PUMP STARTER & MULTILIN RELAY IN MCC	8/C #18 SHIELDED TRIADS -3" RGS
2504	WET WEATHER PUMP NO.5 CAPACITOR	WET WEATHER PUMP NO.5 MOTOR STARTER	POWER FACTOR CORRECTION CAPACITOR	3/C #2/0 & #6 GND - 2" RGS
2505	WET WEATHER DSCH VLV. NO.5-CONTROLS	172-LCP-2	172-CV-09	6#14 & #14 GND-1" RGS
2600	WET WEATHER PUMP NO.6 POWER	WET WEATHER PUMP NO.6	PUMP STARTER IN MCC	3 #350 MCM & #2/0 GND IN EA OF 2 - 3" RGS
2601	WET WEATHER PUMP NO.6 CONTROLS	WET WEATHER PUMP NO.6 & LOCKOUT SWITCH	PUMP STARTER IN MCC	22 #14 ,#14 GND - 1 1/2" RGS
2602	WET WEATHER PUMP NO.6 CONTROLS	STARTER IN MOTOR CONTROL CENTER	172-LCP-2 CONTROL PANEL	22 #14 (4 SPARE),2#12(CT) & #14 GND - 1 1/2" RGS
2603	WET WEATHER PUMP NO.6 CONTROLS	WET WEATHER PUMP NO.6	PUMP STARTER & MULTILIN RELAY IN MCC	8/C #18 SHIELDED TRIADS -3" RGS
2604	WET WEATHER PUMP NO.6 CAPACITOR	WET WEATHER PUMP NO.6 MOTOR STARTER	POWER FACTOR CORRECTION CAPACITOR	3/C #2/0 & #6 GND - 2" RGS
2605	WET WEATHER DSCH VLV. NO.6-CONTROLS	172-LCP-2	172-CV-10	6#14 & #14 GND-1" RGS
2700	WET WEATHER PUMP NO.7 POWER	WET WEATHER PUMP NO.7	PUMP STARTER IN MCC	3 #350 MCM & #2/0 GND IN EA OF 2 - 3" RGS
2701	WET WEATHER PUMP NO.7 CONTROLS	WET WEATHER PUMP NO.7 & LOCKOUT SWITCH	PUMP STARTER IN MCC	22 #14 ,#14 GND - 1 1/2" RGS
2702	WET WEATHER PUMP NO.7 CONTROLS	STARTER IN MOTOR CONTROL CENTER	172-LCP-2 CONTROL PANEL	22 #14 (4 SPARE),2#12(CT) & #14 GND - 1 1/2" RGS
2703	WET WEATHER PUMP NO.7 CONTROLS	WET WEATHER PUMP NO.7	PUMP STARTER & MULTILIN RELAY IN MCC	8/C #18 SHIELDED TRIADS -3" RGS
2704	WET WEATHER PUMP NO.7 CAPACITOR	WET WEATHER PUMP NO.7 MOTOR STARTER	POWER FACTOR CORRECTION CAPACITOR	3/C #2/0 & #6 GND - 2" RGS
2705	WET WEATHER DSCH VLV. NO.7-CONTROLS	172-LCP-2	172-CV-11	6#14 & #14 GND-1" RGS
2800	WET WEATHER PUMP NO.8 POWER	WET WEATHER PUMP NO.8	PUMP STARTER IN MCC	3 #350 MCM & #2/0 GND IN EA OF 2 - 3" RGS
2801	WET WEATHER PUMP NO.8 CONTROLS	WET WEATHER PUMP NO.8 & LOCKOUT SWITCH	PUMP STARTER IN MCC	22 #14 ,#14 GND - 1 1/2" RGS
2802	WET WEATHER PUMP NO.8 CONTROLS	STARTER IN MOTOR CONTROL CENTER	172-LCP-2 CONTROL PANEL	22 #14 (4 SPARE),2#12(CT) & #14 GND - 1 1/2" RGS
2803	WET WEATHER PUMP NO.8 CONTROLS	WET WEATHER PUMP NO.8	PUMP STARTER & MULTILIN RELAY IN MCC	8/C #18 SHIELDED TRIADS -3" RGS
2804	WET WEATHER PUMP NO.8 CAPACITOR	WET WEATHER PUMP NO.8 MOTOR STARTER	POWER FACTOR CORRECTION CAPACITOR	3/C #2/0 & #6 GND - 2" RGS
2805	WET WEATHER DSCH VLV. NO.8-CONTROLS	172-LCP-2	172-CV-12	6#14 & #14 GND-1" RGS

NO.	DATE	REVISIONS	APP.

GENERAL NOTES:

A. THIS EXISTING CONDUIT AND CONDUCTOR SCHEDULE IS PROVIDED TO HELP IN ESTIMATION OF THE PROJECT CONDUCTOR REMOVALS, TEMPORARY POWER POWER REQUIREMENT AND GENERAL INFORMATION. ALL OF THE EXISTING CONDUCTORS ARE TO BE REMOVED AND REPLACED AS REQUIRED FOR THE PROPOSED EQUIPMENT. IT IS FROM THE ORIGINAL CONSTRUCTION AND MAY NOT SHOW ALL CONDUCTORS TO BE REMOVED, IT DOES PROVIDE FAMILIARITY WITH THE PROJECT.

B. CONTRACTOR SHALL DISPOSE OF ALL MATERIALS IN COMPLIANCE WITH THE SPECIFICATIONS PROCEDURES. PROVIDE ALL TEMPORARY IN COMPLIANCE WITH NEC ARTICLE 580.

NOTICE:
FOR YOUR SAFETY, YOU ARE REQUIRED BY TEXAS LAW TO CALL 811 AT LEAST 48 HOURS BEFORE YOU DIG SO THAT UNDERGROUND LINES CAN BE MARKED. THIS SIGNATURE DOES NOT FULFILL YOUR OBLIGATION TO CALL 811

VERIFICATION OF PRIVATE UTILITY LINES

Date:

CenterPoint Energy natural gas utilities shown.
(Gas services lines are not shown). This signature not to be used for conflict verification.
Signature Valid for six months.

Date:

CenterPoint Energy / UNDERGROUND Electrical Facilities Verification ONLY.
(This Signature verifies existing underground facilities - not to be used for conflict verification.)
Signature Valid for six months.

Date:

Approved for AT&T Texas / SWBT underground conduit facilities only.
Signature valid for one year.

KGI Kalluri Group, Inc.
TBPE Registration No. F-665
16300 Katy Freeway, Suite 172
Houston, Texas 77094
Phone: (713)-365-9288
PROJECT 4285

QUIDDITY
Texas Board of Professional Engineers and Land Surveyors Reg. No. F-23290
6330 West Loop South, Suite 150 • Bellaire, TX 77401 • 713.777.5337

JOB NO: 00050-0099-01 DATE: 5/7/2026

APPROVED BY: RK
DATE: 05/2026
DESIGNED BY: SLJ
DRAWN BY: RHW
SURVEYED BY: WESTERN GROUP CONSULTANTS
FB NO. P-6414

STATE OF TEXAS
STACY L. JORDAN
148233
LICENSED
PROFESSIONAL ENGINEER
06.12.2026

CITY OF HOUSTON
HOUSTON PUBLIC WORKS

SCOTT STREET NO. 1 LIFT STATION REHABILITATION
ELECTRICAL

CONDUIT SCHEDULE SHEET 2 - EXISTING

WBS NUMBER	FOR CITY OF HOUSTON USE ONLY
R-000267-127A-4	
DRAWING SCALE	
AS NOTED	
CITY OF HOUSTON PM	
TAHA LOTIA	
DWG NO. 0-E-09	
SHEET NO. 130 OF 220	

F:\Users\KGI-StacyJordan\Kalluri Group, Inc\KGI - Documents\4285-QEL (Scott Street LS)\Drawings\Electrical\0-E-09 Conduit Schedule Sheet 2 - Existing.dwg

ORIGINAL SCALE IN INCHES FOR REDUCED PLANS

NO.	DATE	REVISIONS	APP.

ELECTRICAL TASKS NOTES:

1. TEMPORARY POWER RACK AND OVERHEAD LINE SYSTEM, SHOWN ON 0-E-04 SHALL BE DISCONNECTED, REMOVED AND DISPOSED OF PRIOR FINAL CIVIL SITE GRADING AND SOD REPLACEMENT.
2. THE ELECTRIC SERVICE UNDERGROUND FEEDERS, INTERCEPTION POINTS, SHALL HAVE RED LINE DIMENSIONS ON THE AS BUILT DRAWINGS. THE SERVICE FEEDER DUCT BANK IS TO BE INTERCEPTED AND REROUTED THROUGH THE NEW ELECTRICAL BUILDING SWITCHGEAR.
3. COORDINATE DUCT BANK AND PULL BOX INSTALLATIONS WITH YARD PIPING WORK, COORDINATE IF DUCT BANKS NEED TO BE INSTALLED IN SEGMENTS FOR CONSTRUCTION PHASES.
4. SITE GROUNDING WILL REQUIRE CUTTING FOR PROPOSED YARD PIPING INSTALLATION AND MAY REQUIRE REPAIRS THROUGH ALL PHASES OF CONSTRUCTION TO MAINTAIN SITE SYSTEM GROUNDING.

ELECTRICAL TASKS NOTES CONT.:

5. GROUND TEST WELLS LABELED AS EXISTING ARE NOT INTENDED TO REQUIRE REPLACEMENT, HOWEVER THE EXISTING GROUND SYSTEM IS TO BE MAINTAINED DURING CONSTRUCTION TO ENSURE ALL GROUNDING POINTS REMAIN CONNECTED.
6. GROUND TEST WELLS LABELED AS PROPOSED ARE EXPECTED TO BE REPLACED DURING CONSTRUCTION.
7. SITE LIGHTING AIMING SHALL BE COORDINATED FOR AFTER OR BEFORE WORK HOURS TO ENSURE AIMING IS ACCEPTABLE.

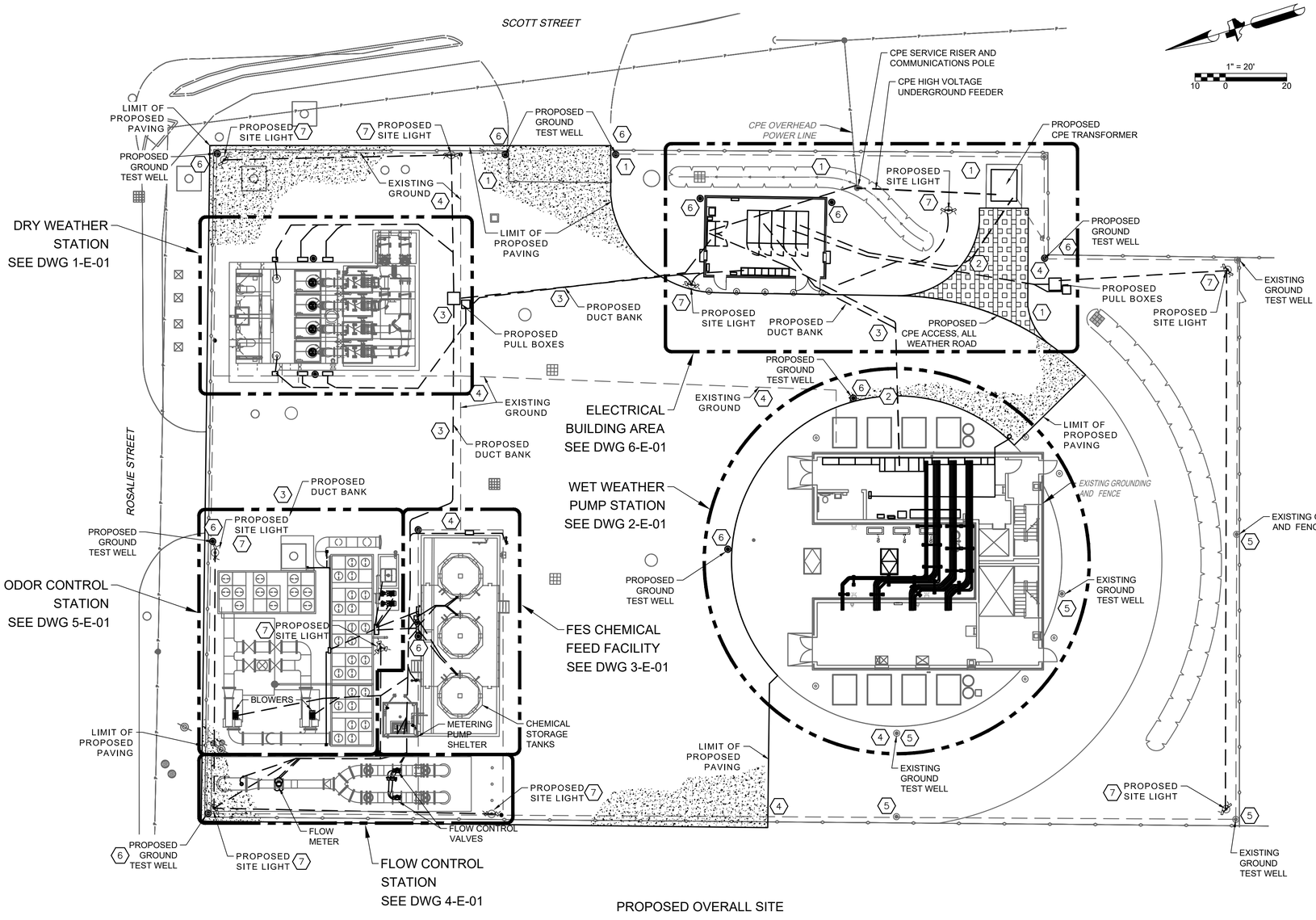

PROPOSED OVERALL SITE

PLAN

1" = 15'-0"

GENERAL ELECTRICAL NOTES:

A. THIS DRAWING ILLUSTRATES THE FINAL PROPOSED SITE FACILITIES AND DESCRIBES WORK AREAS, WITH PROPOSED ENLARGED DRAWING NUMBERS. PRIMARY DUCT BANKS ARE SHOWN IN SLAB CONDUIT RUNS ARE NOT, FOR CLARITY. THIS DRAWING ALSO SHOWS THE DESIGN LIMITS OF NEW SITE PAVING AND FACILITIES EXPECTED TO REMAIN, IN THIS PROJECT. SEE DIVISION 16 SPECIFICATIONS FOR ALL PROPOSED WORK AND EQUIPMENT REQUIREMENTS.

B. CONTRACTOR HAS CPE COORDINATION TASKS, IN THIS PROJECT, AND WORK IN NEAR PROXIMITY TO CPE OVERHEAD POWER LINES. CONTRACTOR SHALL FOLLOW NEC AND CPE STANDARDS FOR SAFE WORKING DISTANCE, OSHA TEMPORARY SIGNAGE AND SAFETY PROCEDURES.

C. TEMPORARY PROVISIONS ARE TO REMAIN IN SERVICE WHILE PROPOSED WORK, INCLUDING POWER, CONTROLS, SCADA AND COMMUNICATIONS, IS TESTED AND ACCEPTED.

KGI Kalluri Group, Inc.
TBPE Registration No. F-665
16300 Katy Freeway, Suite 172
Houston, Texas 77094
Phone: (713)-365-9288
PROJECT 4285

QUIDDITY
Texas Board of Professional Engineers and Land Surveyors Reg. No. F-23290
6330 West Loop South, Suite 150 • Bellaire, TX 77401 • 713.777.5337

JOB NO: 00050-0099-01 DATE: 5/7/2026

APPROVED BY: RK

DATE: 05/2026

DESIGNED BY: SLJ

DRAWN BY: RHW

SURVEYED BY: WESTERN GROUP CONSULTANTS
FB NO. P-6414

STATE OF TEXAS
STACY L. JORDAN
148233
LICENSED PROFESSIONAL ENGINEER
06.12.2026

CITY OF HOUSTON
HOUSTON PUBLIC WORKS

SCOTT STREET NO. 1 LIFT STATION REHABILITATION
ELECTRICAL

OVERALL SITE PLAN - PROPOSED

WBS NUMBER	FOR CITY OF HOUSTON USE ONLY
R-000267-127A-4	
DRAWING SCALE	
AS NOTED	
CITY OF HOUSTON PM	
TAHA LOTIA	
DWG NO. 0-E-10	
SHEET NO. 131 OF 220	

D:\Kalluri Group, Inc\KGI - Documents\4285-QEL (Scott Street LS)\Drawings\Electrical\0-E-04 -10 -11 Electrical Site Plans.dwg

0 1 2 3 4 5 ORIGINAL SCALE IN INCHES FOR REDUCED PLANS

NO.	DATE	REVISIONS	APP.

ELECTRICAL TASKS NOTES:

1. CONTRACTOR SHALL COORDINATE FOR THE CPE TRANSFORMER REPLACEMENT TO TAKE PLACE DURING THE EXTENDED SERVICE OUTAGE, AND TEMPORARY SERVICE OPERATION.
2. THE EXISTING ELECTRIC SERVICE UNDERGROUND DUCT BANK, LEAVING THE CPE TRANSFORMER AND ENTERING THE WET WEATHER PUMP STATION BUILDING, SHALL BE LOCATED, EXPOSED AND CUT FOR DUCTS TO BE REROUTED THROUGH THE NEW ELECTRICAL BUILDING MAIN SWITCHGEAR. PORTION OF THE EXISTING DUCT BANK MAY HAVE TO BE REMOVED FOR STORM DRAIN LINE INSTALLATION.
3. COORDINATE DUCT BANK INSTALLATION ELEVATIONS WITH YARD PIPING WORK. THE DUCT BANKS MAY REQUIRE SEGMENTED INSTALLATION IN THE CONSTRUCTION PHASES.
4. SITE GROUNDING WILL REQUIRE CUTTING FOR PROPOSED YARD PIPING AND MAY REQUIRE REPAIRS THROUGH ALL PHASES OF CONSTRUCTION TO MAINTAIN SITE SYSTEM GROUNDING.

ELECTRICAL TASKS NOTES CONT.:

5. GROUND TEST WELLS LABELED AS EXISTING ARE NOT INTENDED TO REQUIRE REPLACEMENT, HOWEVER THE EXISTING GROUND SYSTEM IS TO BE MAINTAINED DURING CONSTRUCTION TO ENSURE ALL GROUNDING POINTS REMAIN CONNECTED.
6. GROUND TEST WELLS LABELED AS PROPOSED ARE EXPECTED TO BE REPLACED DURING CONSTRUCTION.
7. CONDUIT TAG 004 IS MULTIPLE CONDUITS THAT WILL REQUIRE CONTRACTOR COORDINATION FOR BEST APPLICATION CHOSEN EQUIPMENT CONNECTION REQUIREMENTS.

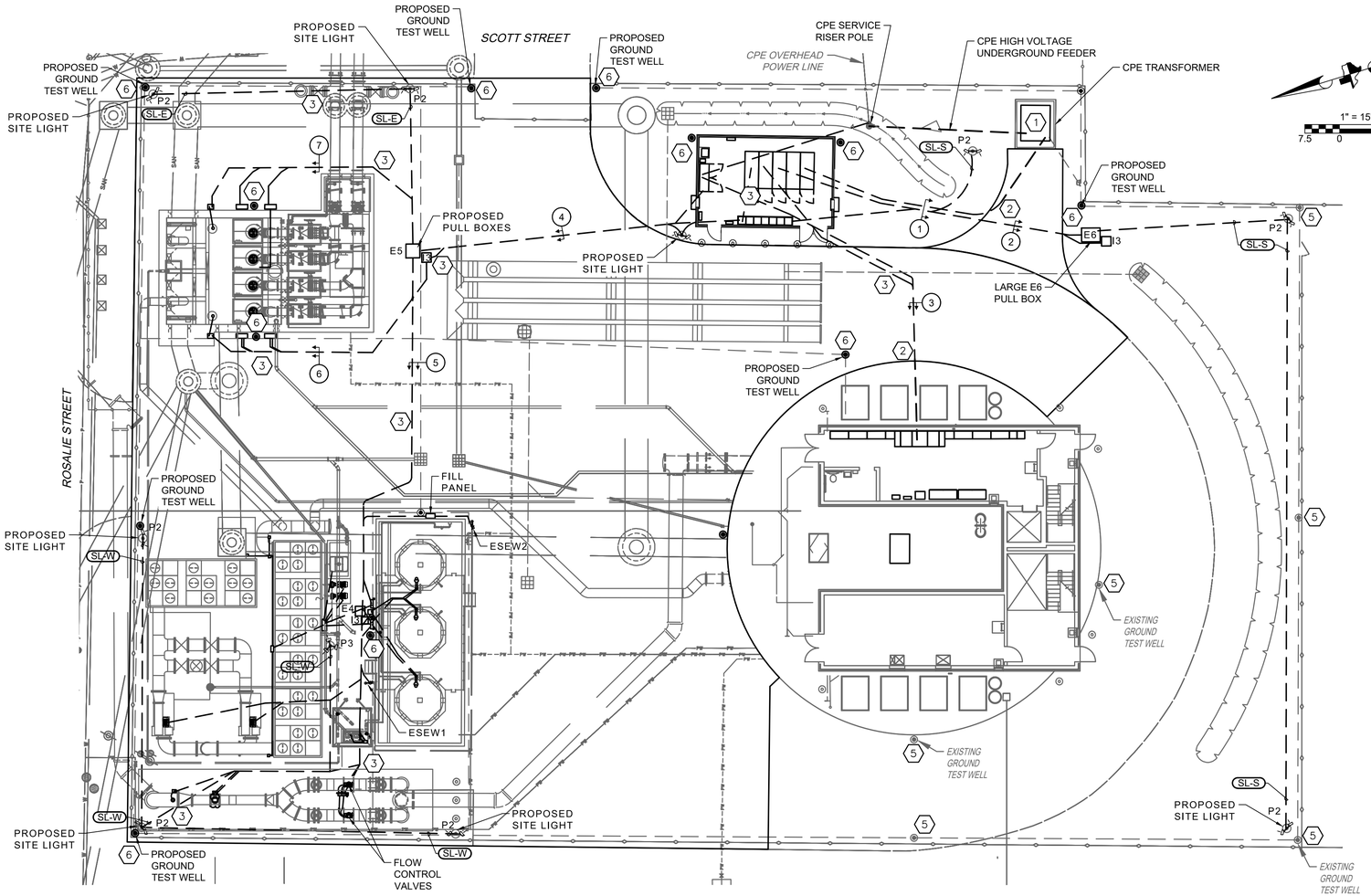

OVERALL UNDERGROUND SITE PLAN
1" = 15'-0"

DUCT BANK CONDUITS

1. 100 101 107 SL-S GEN-C
2. 101 107 SL-S GEN-C
3. 104 003
4. 008 DWP1-P DWP2-P DWP3-P DWP4-P; 009 DWP1-M DWP2-M DWP3-M DWP4-M
7. 004 SL-E SL-W H-OC-P 103 106
5. 004 SL-W H-OC-P
6. 008 DWP1-P DWP2-P DWP1-M DWP2-M
7. 009 DWP3-P DWP4-P DWP3-M DWP4-M

SOME CONDUIT TAGS REPRESENT MULTIPLE CONDUITS, IN THE DUCT BANK, SEE CONDUIT SCHEDULES FOR COMPLETE TAGGING INFORMATION

GENERAL ELECTRICAL NOTES:

A. THIS DRAWING ILLUSTRATES THE PROPOSED SITE PRIMARY DUCT BANK'S, SITE LIGHTING, AND GROUNDING ELEMENTS.

B. SEE DIVISION 16 SPECIFICATIONS FOR ALL WORK AND EQUIPMENT REQUIREMENTS. ALL TEMPORARY CONDUIT AND CONDUCTORS, FOR ALL SYSTEMS IS TO BE INSTALLED IN COMPLIANCE WITH THE NEC ARTICLE 590.

C. CONTRACTOR SHALL NOTIFY THE CITY CONSTRUCTION REPRESENTATIVE, UPON DISCOVERY, OF ANY CONCEALED DEVIATIONS FROM THE DRAWINGS EXPOSED AFTER "AS FOUND" DOCUMENT SUBMITTAL.

D. CONTRACTOR HAS TASKS, IN THIS PROJECT, IN NEAR PROXIMITY TO CPE OVERHEAD POWER LINES. CONTRACTOR SHALL FOLLOW NEC AND CPE STANDARDS FOR SAFE WORKING DISTANCE, TEMPORARY SIGNAGE AND PROCEDURES.

KGI Kalluri Group, Inc.
TBPE Registration No. F-665
16300 Katy Freeway, Suite 172
Houston, Texas 77094
Phone: (713)-365-9288
PROJECT 4285

QUIDDITY
Texas Board of Professional Engineers and Land Surveyors Reg. No. F-23290
6330 West Loop South, Suite 150 • Bellaire, TX 77401 • 713.777.5337

JOB NO: 00050-0099-01 DATE: 5/7/2026

APPROVED BY: RK

DATE: 05/2026

DESIGNED BY: SLJ

DRAWN BY: RHW

SURVEYED BY: WESTERN GROUP CONSULTANTS
FB NO. P-6414

STATE OF TEXAS
STACY L. JORDAN
148233
LICENSED PROFESSIONAL ENGINEER
05.12.2026

CITY OF HOUSTON
HOUSTON PUBLIC WORKS

SCOTT STREET NO. 1 LIFT STATION REHABILITATION
ELECTRICAL
OVERALL UNDERGROUND SITE PLAN - PROPOSED

WBS NUMBER	FOR CITY OF HOUSTON USE ONLY
R-000267-127A-4	
DRAWING SCALE	
AS NOTED	
CITY OF HOUSTON PM	
TAHA LOTIA	
DWG NO. 0-E-11	
SHEET NO. 132 OF 220	

D:\Kalluri Group, Inc\KGI - Documents\4285-QEL (Scott Street LS)\Drawings\Electrical\0-E-04 -10 -11 Electrical Site Plans.dwg

ORIGINAL SCALE IN INCHES FOR REDUCED PLANS

NO.	DATE	REVISIONS	APP.

EQUIPPED SPACE	MCC-1 FEEDER	METERING AND	UTILITY SERVICE MAIN BREAKER	EQUIPPED SPACE
MCC-2 FEEDER	PORTABLE GENSET CONNECTION	PERMANENT GENSET CONNECTION	SURGE PROTECTIVE DEVICE	HOUSE POWER FEEDER

PROPOSED MAIN SWITCHGEAR

ELEVATION

NONE

BREAKER ARRANGEMENT SHOWN IS DIAGRAMMATIC

FINAL PHYSICAL ARRANGEMENT SHALL CONSIDER SITE LAYOUT AND MANUFACTURER'S REQUIREMENTS

ELECTRICAL TASKS NOTES:

1. CONTRACTOR SHALL COORDINATE THE CPE TRANSFORMER REPLACEMENT TO TAKE PLACE DURING THE EXTENDED SERVICE OUTAGE, AND TEMPORARY SERVICE OPERATION.
2. CONTRACTOR SHALL COORDINATE THE ELECTRICAL BUILDING SIZE WITH ELECTRICAL EQUIPMENT CHOSEN BY THE CONTRACTOR. DESIGN IS BASED ON EATON BRAND EQUIPMENT.
3. CONTRACTOR SHALL COORDINATE THE CONSTRUCTION PHASES REQUIRED TO KEEP EXISTING, TEMPORARY, AND PROPOSED ODOR CONTROL SYSTEMS IN SERVICE.

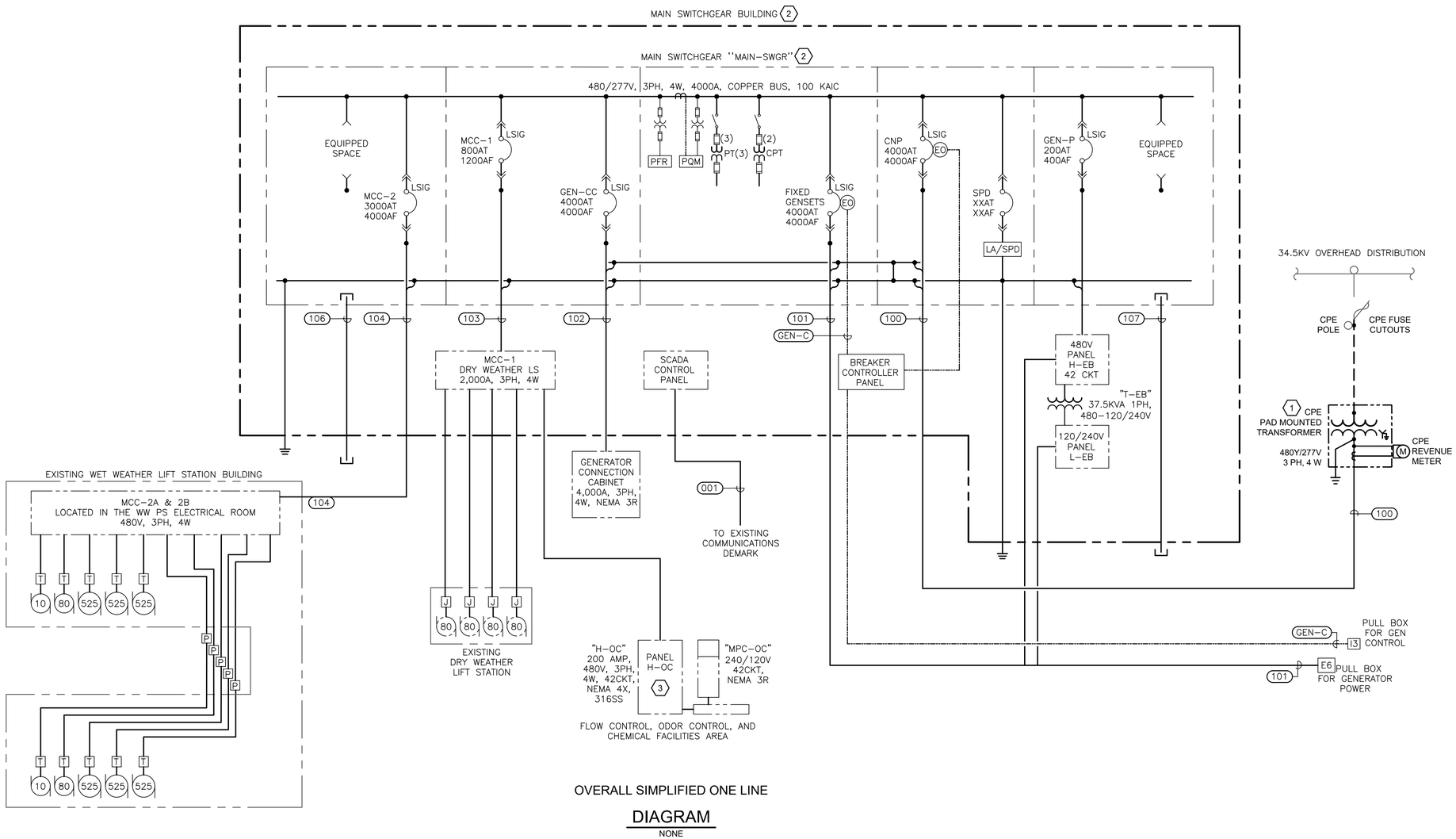

OVERALL SIMPLIFIED ONE LINE

DIAGRAM

NONE

GENERAL NOTES:

A. THIS DRAWING IS PROVIDED TO ILLUSTRATE THE PROPOSED ELECTRICAL POWER DISTRIBUTION SCHEME.

B. THE ELECTRICAL BUILDING EQUIPMENT IS DESIGNED AROUND EATON BRAND, MAGNUM BREAKER SERIES SWITCHGEAR, WITH MAINTENANCE BYPASS SWITCHES.

C. THE MAIN-SWITCHGEAR SHALL BE CAPABLE OF A PORTABLE GENERATOR CONNECTION WITH HAND OPERATION, WITH PERMANENT GENERATOR AND UTILITY CONNECTION. AUTOMATIC TRANSFER OPERATION SHALL BE PROVIDED BY A BREAKER CONTROLLER, TO TRANSFER LOAD TO THE AVAILABLE POWER SOURCE.

D. THE PROPOSED DRY WEATHER LIFT STATION MCC-1 AND WET WEATHER WEATHER MCC-2 SHALL BE NEMA 12 ENCLOSED.

KGI Kalluri Group, Inc.
TBPE Registration No. F-665
16300 Katy Freeway, Suite 172
Houston, Texas 77094
Phone: (713)-365-9288
PROJECT 4285

QUIDDITY
Texas Board of Professional Engineers and Land Surveyors Reg. No. F-23290
6330 West Loop South, Suite 150 • Bellaire, TX 77401 • 713.777.5337

JOB NO: 00050-0099-01 DATE: 5/7/2026

APPROVED BY: RK

DATE: 05/2026

DESIGNED BY: SLJ

DRAWN BY: RHW

SURVEYED BY: WESTERN GROUP CONSULTANTS
FB NO. P-6414

STATE OF TEXAS
STACY L. JORDAN
148233
LICENSED
PROFESSIONAL ENGINEER
05.12.2026

CITY OF HOUSTON

HOUSTON PUBLIC WORKS

SCOTT STREET NO. 1 LIFT STATION REHABILITATION

ELECTRICAL

OVERALL SIMPLIFIED ONE LINE DIAGRAM - PROPOSED

WBS NUMBER	FOR CITY OF HOUSTON USE ONLY
R-000267-127A-4	
DRAWING SCALE	
AS NOTED	
CITY OF HOUSTON PM	
TAHA LOTIA	
DWG NO. 0-E-12	
SHEET NO. 133 OF 220	

F:\Users\KGI-StacyJordan\Kalluri Group, Inc\KGI - Documents\4285-QEL (Scott Street LS)\Drawings\Electrical\0-E-12 Overall MSWGR One Line Diagram - Proposed.dwg

0 1 2 3 4 5 ORIGINAL SCALE IN INCHES FOR REDUCED PLANS

NO.	DATE	REVISIONS	APP.

MCC–1 LOAD CALCULATIONS

SECTION A LOAD DESCRIPTION	CONNECTED KVA	CONNECTED AMPS	RUNNING KVA	RUNNING AMPS
WET WEATHER PUMP 1 – 80 HP	77.7	93.5	77.7	93.5
WET WEATHER PUMP 2 – 80 HP	77.7	93.5	77.7	93.5
WET WEATHER PUMP 3 – 80 HP	77.7	93.5	77.7	93.5
WET WEATHER PUMP 4 – 80 HP	77.7	93.5		
PANELBOARD H–OC	48.2	58.0	48.2	58.0
LOAD TOTAL	359	423	281.3	338.5

THE MCC–1 CONNECTED LOAD IS 359 KVA AT 480 VOLTS = 423 AMPS, THE MCC–1 FEEDER BREAKER AND AND CONDUCTORS ARE SUFFICIENT FOR THE MCC–1 LOAD.

MCC–2 LOAD CALCULATIONS

SECTION A LOAD DESCRIPTION	CONNECTED KVA	CONNECTED AMPS	RUNNING KVA	RUNNING AMPS
WET WEATHER PUMP 1 – 80 HP	77.7	93.5	77.7	93.5
WET WEATHER PUMP 3 – 525 HP	507.1	610	507.1	610
WET WEATHER PUMP 5 – 525 HP	507.1	610	507.1	610
WET WEATHER PUMP 7 – 525 HP	507.1	610		
DRAIN PUMP 1 – 10 HP	11.6	14	11.6	14
SECTION 2A LOAD	1610.6	1937.5	1103.5	1327.5

SECTION B LOAD DESCRIPTION	CONNECTED KVA	CONNECTED AMPS	RUNNING KVA	RUNNING AMPS
WET WEATHER PUMP 2 – 80 HP	77.7	93.5	77.7	93.5
WET WEATHER PUMP 4 – 525 HP	507.1	610	507.1	610
WET WEATHER PUMP 6 – 525 HP	507.1	610	507.1	610
WET WEATHER PUMP 8 – 525 HP	507.1	610		
DRAIN PUMP 2 – 10 HP	11.6	14	11.6	14
PANELBOARD H–WW	98.1	85	98.1	85
SECTION 2B LOAD	1708.7	2022.5	1201.6	1412.5

	CONNECTED KVA	CONNECTED AMPS	RUNNING KVA	RUNNING AMPS
MCC–2 TOTAL LOAD	3319.3	3960	2305.1	2740

THE MCC–2 CONNECTED LOAD IS 3291.8 KVA AT 480 VOLTS = 3960 AMPS, THE MCC–2 FEEDER BREAKER AND CONDUCTORS ARE SUFFICIENT FOR THE MCC–2 LOAD.

MAIN SWITCHGEAR LOAD ALAYSIS

LOAD DESCRIPTION	CONNECTED KVA	CONNECTED AMPS	RUNNING KVA	RUNNING AMPS
DRY WEATHER PUMP STATION MCC–1	359	423	281.3	338.5
WET WEATHER PUMP STATION MCC–2	3319.3	3960	2305.1	2740
PANELBOARD H–EB	72.9	88	72.9	88
CONNECTED SUBTOTAL	3751.2	4471	2659.3	3166.5
25% OF LARGEST MOTOR LOAD			126.7	152.5
CALCULATED NEC LOAD			2786	3319

THE MAIN SWITCHGEAR CONNECTED LOAD IS 3723.7 KVA = 4471 AMPS AT 480 VOLTS.

THE MAIN SWITCHGEAR NEC CALCULATED RUNNING LOAD IS 2758.5 KVA = 3319 AMPS. THE MAIN SWITCHGEAR IS RATED FOR 4000 AMP. THE 9 SETS OF 750 KCMIL FEEDER CABLES ARE RATED 4275 AMPS. ALL ASPECTS OF THE SERVICE ARE SUFFICIENT FOR THE LOADS.

NOTICE:
FOR YOUR SAFETY, YOU ARE REQUIRED BY TEXAS LAW TO CALL 811 AT LEAST 48 HOURS BEFORE YOU DIG SO THAT UNDERGROUND LINES CAN BE MARKED. THIS SIGNATURE DOES NOT FULFILL YOUR OBLIGATION TO CALL 811

VERIFICATION OF PRIVATE UTILITY LINES

Date:

CenterPoint Energy natural gas utilities shown.
(Gas services lines are not shown). This signature not to be used for conflict verification.

Signature Valid for six months.

Date:

CenterPoint Energy / UNDERGROUND Electrical Facilities Verification ONLY.
(This Signature verifies existing underground facilities - not to be used for conflict verification.)

Signature Valid for six months.

Date:

Approved for AT&T Texas / SWBT underground conduit facilities only.
Signature valid for one year.

KGI Kalluri Group, Inc.
TBPE Registration No. F–665
16300 Katy Freeway, Suite 172
Houston, Texas 77094
Phone: (713)–365–9288
PROJECT 4285

QUIDDITY
Texas Board of Professional Engineers and Land Surveyors Reg. No. F-23290
6330 West Loop South, Suite 150 • Bellaire, TX 77401 • 713.777.5337

JOB NO: 00050–0099–01 DATE: 5/7/2026

APPROVED BY: RK
DATE: 05/2026
DESIGNED BY: SLJ
DRAWN BY: RHW
SURVEYED BY: WESTERN GROUP CONSULTANTS
FB NO. P–6414

STATE OF TEXAS
STACY L. JORDAN
148233
LICENSED PROFESSIONAL ENGINEER
06.12.2026

CITY OF HOUSTON
HOUSTON PUBLIC WORKS

SCOTT STREET NO. 1
LIFT STATION REHABILITATION
ELECTRICAL

OVERALL LOAD ANALYSIS - PROPOSED

WBS NUMBER	FOR CITY OF HOUSTON USE ONLY
R–000267–127A–4	
DRAWING SCALE	
AS NOTED	
CITY OF HOUSTON PM	
TAHA LOTIA	
DWG NO. 0–E–13	
SHEET NO. 134 OF 220	

F:\Users\KGI-StacyJordan\Kalluri Group, Inc\KGI - Documents\4285-QEL (Scott Street LS)\Drawings\Electrical\0-E-13 Overall Load Analysis - Proposed.dwg

ORIGINAL SCALE IN INCHES FOR REDUCED PLANS

NO.	DATE	REVISIONS	APP.

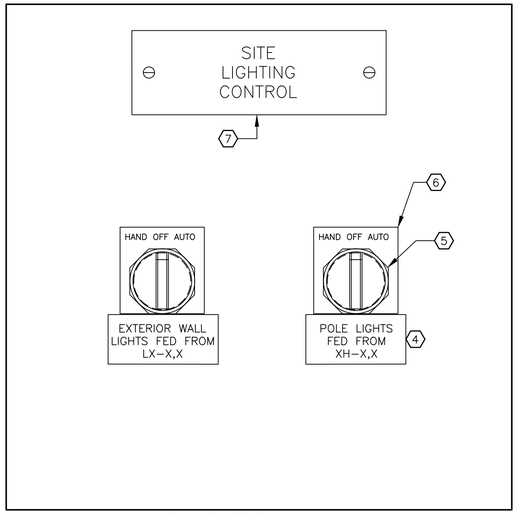

PROPOSED ELECTRICAL BUILDING
LIGHTING CONTROL PANEL

WET WEATHER PUMP STATION BUILDING
LIGHTING CONTROL PANEL WILL NOT HAVE
SITE LIGHTING INCLUDED

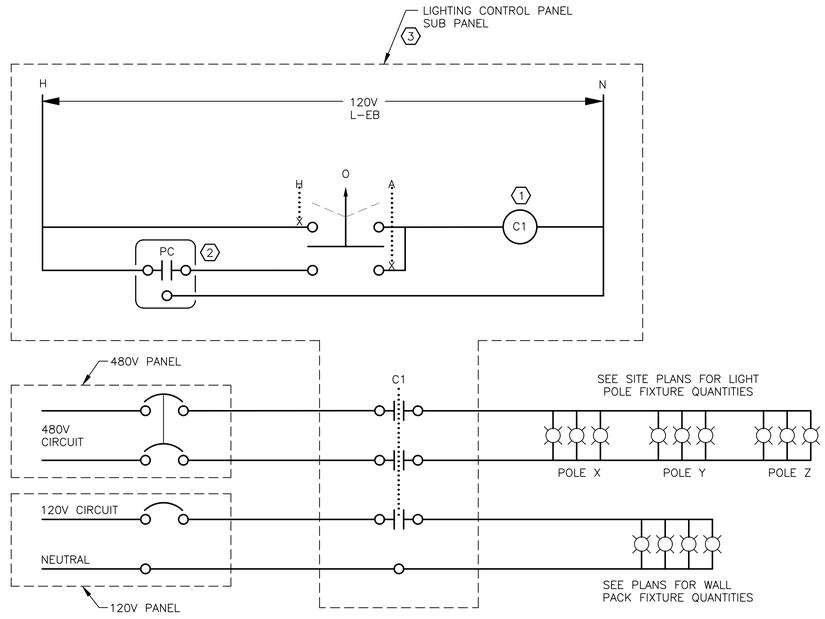

TYPICAL LIGHTING CONTROL PANEL
WIRING SCHEMATIC

NOTES:

1. PROVIDE EATON "CN35 SERIES" (OR EQUAL) ELECTRICALLY HELD LIGHTING CONTACTOR, WITH MINIMUM OF TWO SPARE CONTACTS PER CONTACTOR.
2. PROVIDE PHOTOCELL 4' MINIMUM ABOVE ROOF LINE LOCATED WITH NORTHERN EXPOSURE AND PROVEN FUNCTIONAL FOR SUNSET TO SUNRISE OPERATION.
3. INSTALL COMPONENTS ON SUB PANEL, PROVIDE FIELD WIRING AND RAIL MOUNTED TERMINAL BLOCKS (30A MIN.). ALL CONDUCTORS TO/FROM CONTROL PANEL SHALL PASS THROUGH TERMINAL BLOCKS BEFORE CONNECTION TO DEVICE WITHIN THE PANEL. PANEL WIRING SHOP DRAWING SHALL BE SUBMITTED FOR ENGINEER APPROVAL AND A PERMANENT COPY OF APPROVED DRAWING SHALL BE PROVIDE IN POCKET INSIDE ON PANEL DOOR.
4. PHENOLIC THREE LAYER NAMEPLATE WITH 3/16" BLACK LETTERS ON WHITE BACKGROUND, INDICATE CIRCUIT NUMBERS FOR EACH CIRCUIT. SEE PANEL SCHEDULES FOR RELATED CIRCUITS.
5. 3 POSITION SELECTOR SWITCH WITH SEALED MAINTAINED CONTACTS.
6. FACTORY LEGEND PLATE WITH 3/16" BLACK TEXT ON WHITE LABELED AS SHOWN.
7. PHENOLIC THREE LAYER NAMEPLATE WITH 3/8" BLACK LETTERS ON WHITE BACKGROUND.

LIGHT FIXTURE SCHEDULE

TYPE	DESCRIPTION	CATALOG NUMBER	LAMPS	INPUT VOLTAGE	INPUT WATTS	REMARKS
A	WHITE LINEAR 48" LED FIXTURE WITH WIDE DIFFUSE LENS AND HIGH EFFICIENCY PACKAGE	LITHONIA CLX–L48–7000LM–HEF–WDL–MVOLT–GZ10–50K–80CRI–WH	LED	120	45	INSTALL FIXTURES IN OVERHEAD ROWS
B	VAPOR TIGHT LED STRIP LIGHT FIXTURE USED FOR OUTDOOR AND CANOPIES.	LITHONIA CSVT–L48–5000LM–MVOLT–SWW3–80CRI	LED	120	42	INSTALL FIXTURE IN DRY WELLS.
C	DARK BRONZE VANDAL RESISTANT LED WALL PACK LUMINAIRE	LITHONIA TWPX1–LED–P1–50K–MVOLT–DDBXD	LED	120	10	INSTALL FIXTURE WITH TOP AT ONE FOOT BELOW ROOF OR SOFFIT
D	DARK BRONZE ALUMINUM WALL PACK LED FIXTURE WITH 90 MINUTE EMERGENCY BATTERY PACK.	LITHONIA WST–LED–P3–50K–VF–MVOLT–E20WC–DDBXD	LED	120	50	INSTALL FIXTURE WITH TOP AT ONE FOOT BELOW ROOF.
E	EMERGENCY FIXTURE WITH TWO HEADS AND SEALED LEAD ACID 90 MINUTE BATTERY.	LITHONIA ELT24–W–MT WITH ELAMSTS MOUNTING SHELF. PAINT SHELF WHITE.	HALOGEN	120	20	INSTALL FIXTURE WITH BOTTOM OF FIXTURE AT 10'–0" ABOVE THE FLOOR. ADD A CORD WITH PLUG TO THE FIXTURE AND PLUG THE CORD INTO A RECEPTACLE MOUNTED TO THE SIDE OF THE FIXTURE.
X	WHITE LED EXIT SIGN FIXTURE IN A THERMOPLASTIC HOUSING WITH RED LETTERS AND NICKEL CADMIUM BATTERY	LITHONIA LQM–S–W–3–R–120/277–ELN	LED	120	1	INSTALL A FIXTURE ABOVE EACH EXIT DOOR.
P	SITE POLE LIGHTING – SEE DRAWINGS, P2 HAS TWO FIXTURES, P3 HAS THREE FIXTURES, P4 HAS FOUR FIXTURES	LITHONIA DSXF2–LED–6–P2–50K–WFL–480–IS–0DF–DNAXD	LED	480	138	INSTALL ON TOP OF LIGHTING POLE.

KGI Kalluri Group, Inc.
TBPE Registration No. F–665
16300 Katy Freeway, Suite 172
Houston, Texas 77094
Phone: (713)–365–9288
PROJECT 4285

QUIDDITY
Texas Board of Professional Engineers and Land Surveyors Reg. No. F-23290
6330 West Loop South, Suite 150 • Bellaire, TX 77401 • 713.777.5337

JOB NO: 00050–0099–01 DATE: 5/7/2026

APPROVED BY: RK
DATE: 05/2026
DESIGNED BY: SLJ
DRAWN BY: RHW
SURVEYED BY: WESTERN GROUP CONSULTANTS
FB NO. P–6414

STATE OF TEXAS
STACY L. JORDAN
148233
LICENSED
PROFESSIONAL ENGINEER
05.12.2026

CITY OF HOUSTON
HOUSTON PUBLIC WORKS

SCOTT STREET NO. 1
LIFT STATION REHABILITATION
ELECTRICAL

LIGHT FIXTURE SCHEDULE
AND CONTROL DIAGRAM

WBS NUMBER	FOR CITY OF HOUSTON USE ONLY
R–000267–127A–4	
DRAWING SCALE	
AS NOTED	
CITY OF HOUSTON PM	
TAHA LOTIA	
DWG NO. 0–E–21	
SHEET NO. 135 OF 220	

F:\Users\KGI-StacyJordan\Kalluri Group, Inc\KGI - Documents\4285-QEL (Scott Street LS)\Drawings\Electrical\0-E-21 Light Fixture Schedule and Control Diagram.dwg

0 1 2 3 4 5 ORIGINAL SCALE IN INCHES FOR REDUCED PLANS

NO.	DATE	REVISIONS	APP.

TAG	DESCRIPTION	ROUTING		CONDUIT & WIRE SIZES
		FROM	TO	
001	HARDWIRE COMMUNICATIONS SERVICE TO SITE	CPE TERMINAL POLE	EB COMMUNICATIONS PPU CABINET	2"C - PULL STRINGS
002	DRY WEATHER PLC NETWORK SERVICE	EB COMMUNICATIONS PPU CABINET	EB DRY WEATHER PLC CABINET	2"C - (2) CAT 6
003	WET WEATHER PLC CABINET COMMS	EB DRY WEATHER PLC CABINET	WET WEATHER PLC CABINET	2"C - (2) CAT 6, 8 #16 TSP
004	ODOR CONTROL AREA I/O TERMINATION CABINET	EB DRY WEATHER PLC CABINET	ODOR CONTROL PLC CABINET	(4) 2"C - 2 WITH TSP ANALOG CABLES AND (2) WITH DISCRETE CONDUCTORS
005	ODOR CONTROL NUTRIENT CABINET	ODOR CONTROL PLC CABINET	ODOR CONTROL NUTRIENT CABINET	1"C - PULL STRING
006	ODOR CONTROL CHEMICAL METERING PUMPS	METERING PUMP SHELTER TERMINATION BOX	ODOR CONTROL PLC CABINET	2"C - (8) #16 TSP, 12 #14
007	ODOR CONTROL BLOWER CONTROL PANEL	ODOR CONTROL BLOWER CONTROL PANEL	ODOR CONTROL PLC CABINET	2"C - (8) #16 TSP, 12 #14
008	WEST DRY WEATHER WET WELL INSTRUMENTS	EB DRY WEATHER PLC CABINET	WEST DRY WEATHER WET WELL INSTRUMENTS	2"C - (2) #16 TSP, 12 #14
009	EAST DRY WEATHER WET WELL INSTRUMENTS	EB DRY WEATHER PLC CABINET	EAST DRY WEATHER WET WELL INSTRUMENTS	2"C - (8) #16 TSP, 12 #14
SL-E	EAST SIDE SITE LIGHTING AND RECEP CIRCUIT	EB-LCP ELECT BLDG LIGHTING CONTROL PANEL	MULTIPLE EAST SIDE LIGHTING POLES	1"C - (2) #6, (2) #12, #10 GND
SL-W	WEST SIDE SITE LIGHTING AND RECEP CIRCUIT	EB-LCP ELECT BLDG LIGHTING CONTROL PANEL	MULTIPLE EAST SIDE LIGHTING POLES	1"C - (2) #6, (2) #12, #10 GND
SL-S	SOUTH SIDE SITE LIGHTING AND RECEP CIRCUIT	EB-LCP ELECT BLDG LIGHTING CONTROL PANEL	MULTIPLE EAST SIDE LIGHTING POLES	1"C - (2) #6, (2) #12, #10 GND
100	ELECTRIC UTILITY ENTRANCE	CENTERPOINT ENERGY TRANSFORMER	MAIN SWITCHGEAR	(9) 4"C EACH WITH 3 #750 MCM, #2/0 NEUT & #2/0 GND
101	GENERATOR SERVICE ENTRANCE	GENERATOR FARM OUTPUT CIRCUIT	MAIN SWITCHGEAR	(8) 4"C EACH WITH 1/2" BULL ROPE
102	PORTABLE GENERATOR CONNECTION CABINET	PORTABLE GENERATOR CABINET OUTPUT	MAIN SWITCHGEAR	(8) 4"C EACH WITH 3 #750 MCM, #2/0 NEUT & #2/0 GND
103	MCC-1 FEEDER	MAIN SWITCHGEAR	MCC-1 MAIN BREAKER	(3) 4"C EACH WITH (3) #600 KCMIL, #2/0 GND
104	MCC-2 FEEDER	MAIN SWITCHGEAR	MCC-2 FEEDER	(8) 4"C EACH WITH (3) #750 MCM, #2/0 GND
105	PANELBOARD H-EB FEEDER	MAIN SWITCHGEAR	H-EB MAIN BREAKER	2 1/2"C - (3) #4/0 AWG, 1/0 GND
106	SPARE TO DRY WEATHER PULL BOX	MAIN SWITCHGEAR	DRY WEATHER E PULL BOX	2"C - 1/2" BULL ROPE
107	SPARE TO GENERATOR E PULL BOX	MAIN SWITCHGEAR	GENERATOR E PULL BOX	2"C - 1/2" BULL ROPE
GEN-C	GENERATOR FARM COMMS & CONTROL	GENERATOR FARM CONTROL PANEL	EB BREAKER CONTROL PANEL & PLC	2"C - (3) #16 TSP, CAT 6, (14) #14
H-OC-P	PANELBOARD H-OC FEEDER	MCC-1	H-OC MAIN BREAKER	2 1/2"C - (3) #4/0 AWG, 1/0 GND
DWP1-P	DRY WEATHER PUMP NO.1 POWER	MCC-1 PUMP 1 STARTER SECTION	PUMP NO.1 CABLE JUNCTION BOX	2"/C - (3) #2/0, #4 GND
DWP1-M	DRY WEATHER PUMP NO.1 MOTOR PROTECTION & RECEP	PUMP NO.1 CABLE JUNCTION BOX	MCC-1 PUMP 1 STARTER SECTION	1 1/2"C - (8) #14, (1) #16 TSP, (3) #12 (GFCI)
DWP1-MCC	DRY WEATHER PUMP NO.1 MCC CONTROLS	MCC-1 PUMP 1 STARTER SECTION	DRY WEATHER PLC CABINET	1"C - (14) #14, (3) #12 (GFCI)
DWP2-P	DRY WEATHER PUMP NO.2 POWER	MCC-1 PUMP 2 STARTER SECTION	PUMP NO.2 CABLE JUNCTION BOX	2"/C - (3) #2/0, #4 GND
DWP2-M	DRY WEATHER PUMP NO.2 MOTOR PROTECTION & RECEP	PUMP NO.2 CABLE JUNCTION BOX	MCC-1 PUMP 2 STARTER SECTION	1 1/2"C - (8) #14, (1) #16 TSP, (3) #12 (GFCI)
DWP2-MCC	DRY WEATHER PUMP NO.2 MCC CONTROLS	MCC-1 PUMP 2 STARTER SECTION	DRY WEATHER PLC CABINET	1"C - (14) #14, (3) #12 (GFCI)
DWP3-P	DRY WEATHER PUMP NO.3 POWER	MCC-1 PUMP 3 STARTER SECTION	PUMP NO.3 CABLE JUNCTION BOX	2"/C - (3) #2/0, #4 GND
DWP3-M	DRY WEATHER PUMP NO.3 MOTOR PROTECTION & RECEP	PUMP NO.3 CABLE JUNCTION BOX	MCC-1 PUMP 3 STARTER SECTION	1 1/2"C - (8) #14, (1) #16 TSP, (3) #12 (GFCI)
DWP3-MCC	DRY WEATHER PUMP NO.3 MCC CONTROLS	MCC-1 PUMP 3 STARTER SECTION	DRY WEATHER PLC CABINET	1"C - (14) #14, (3) #12 (GFCI)
DWP4-P	DRY WEATHER PUMP NO.4 POWER	MCC-1 PUMP 4 STARTER SECTION	PUMP NO.3 CABLE JUNCTION BOX	2"/C - (3) #2/0, #4 GND
DWP4-M	DRY WEATHER PUMP NO.4 MOTOR PROTECTION & RECEP	PUMP NO.4 CABLE JUNCTION BOX	MCC-1 PUMP 3 STARTER SECTION	1 1/2"C - (8) #14, (1) #16 TSP, (3) #12 (GFCI)
DWP4-MCC	DRY WEATHER PUMP NO.4 MCC CONTROLS	MCC-1 PUMP 4 STARTER SECTION	DRY WEATHER PLC CABINET	1"C - (14) #14, (3) #12 (GFCI)
MCC1-PLC	MCC-1 STATUS TO PLC	MCC-1 POWER MONITOR & PHASE FAIL RELAY	EB DRY WEATHER PLC CABINET	1"C - (5) #14, (1) CAT6, #12 GND
EB-T	LIGHTING TRANSFORMER FEEDER	PANEL H-EB	TRANSFORMER T-EB PRIMARY	1 1/4"C - (2) #1, #2 GND
L-EB	LIGHTING PANEL FEEDER	TRANSFORMER T-EB SECONDARY	L-EB MAIN BREAKER	1 1/2" - (3) #1, #4 GND
ESEW1-C	ACTIVATION ALARM FOR - ESEW-1	ESEW-1 FLOW SWITCH	ODOR CONTROL TERMINATION CABINET	1"C - (4) #14, #12 GND
ESEW2-C	ACTIVATION ALARM FOR - ESEW-2	ESEW-2 FLOW SWITCH	ODOR CONTROL TERMINATION CABINET	1"C - (4) #14, #12 GND
CSFP-C	CHEMICAL STORAGE TANKS FILL PANEL	ODOR CONTROL TERMINATION CABINET	TANK FILL DISPLAY PANEL	1"C - (3) #16 TSP, (9) #14, #12 GND
CT1-L	CHEMICAL STORAGE TANK 1 LEVEL INSTRUMENT SIGNAL	CHEMICAL TANK 1 INSTRUMENT	TANK FILL DISPLAY PANEL	1"C - #16 TSP, #12 GND
CT2-L	CHEMICAL STORAGE TANK 2 LEVEL INSTRUMENT SIGNAL	CHEMICAL TANK 2 INSTRUMENT	TANK FILL DISPLAY PANEL	1"C - #16 TSP, #12 GND
CT3-L	CHEMICAL STORAGE TANK 3 LEVEL INSTRUMENT SIGNAL	CHEMICAL TANK 3 INSTRUMENT	TANK FILL DISPLAY PANEL	1"C - #16 TSP, #12 GND
OCB1-C	ODOR CONTROL BLOWER 1 CONTROLS	ODOR CONTROL BLOWER 1 CONTROL PANEL	ODOR CONTROL TERMINATION CABINET	1"C - (8) #14, #16 TSP, #12 GND
OCB2-C	ODOR CONTROL BLOWER 2 CONTROLS	ODOR CONTROL BLOWER 2 CONTROL PANEL	ODOR CONTROL TERMINATION CABINET	1"C - (8) #14, #16 TSP, #12 GND
FM-P	FORCE MAIN FLOW METER POWER	PANEL L-OC	FORCE MAIN FLOW METER	1"C - SEE PANEL SCHEDULE FOR CONDUCTORS
FM-S	FORCE MAIN FLOW METER SIGNAL	FORCE MAIN FLOW METER	ODOR CONTROL TERMINATION CABINET	1"C - (2) #16 TSP, #12 GND
FCV1-P	FLOW CONTROL VALVE 1 POWER	PANEL H-OC	FLOW CONTROL VALVE 1	1"C - SEE PANEL SCHEDULE FOR CONDUCTORS
FCV1-C	FLOW CONTROL VALVE 1 CONTROLS	FLOW CONTROL VALVE 1	ODOR CONTROL TERMINATION CABINET	1" 1/2"C - (10) #14, (2) #16 TSP, #12 GND
FCV2-P	FLOW CONTROL VALVE 2 POWER	PANEL H-OC	FLOW CONTROL VALVE 1	1"C - SEE PANEL SCHEDULE FOR CONDUCTORS
FCV2-C	FLOW CONTROL VALVE 2 CONTROLS	FLOW CONTROL VALVE 2	ODOR CONTROL TERMINATION CABINET	1" 1/2"C - (10) #14, (2) #16 TSP, #12 GND
FP-S	FLOW PRESSURE SWITCH	FLOW SWITCH	ODOR CONTROL TERMINATION CABINET	1"C - (4) #14, #12 GND
NT-L	NUTRIENT STORAGE TANK LEVEL	NUTRIENT STORAGE TANK LEVEL INSTRUMENT	NUTRIENT SYSTEM CONTROL PANEL	1"C - #16 TSP, #12 GND
NBP1-P	NUTRIENT BOOSTER PUMP 1 POWER	PANEL H-OC	NUTRIENT BOOSTER PUMP 1	1"C - SEE PANEL SCHEDULE FOR CONDUCTORS
NBP2-P	NUTRIENT BOOSTER PUMP 2 POWER	PANEL H-OC	NUTRIENT BOOSTER PUMP 2	1"C - SEE PANEL SCHEDULE FOR CONDUCTORS
NSCP-P	NUTRIENT SYSTEM CONTROL PANEL POWER	PANEL L-OC	NUTRIENT SYSTEM CONTROL PANEL	1"C - SEE PANEL SCHEDULE FOR CONDUCTORS
NSCP-C	NUTRIENT SYSTEM CONTROL PANEL CONTROLS	NUTRIENT SYSTEM CONTROL PANEL	ODOR CONTROL TERMINATION CABINET	1" 1/2"C - (10) #14, (2) #16 TSP, #12 GND
MPS-P	METERING PUMP SHELTER POWER	PANEL L-OC	METERING PUMP SHELTER JUNCTION BOX	1"C - SEE PANEL SCHEDULE FOR CONDUCTORS
MP1-P	METERING PUMP 1 POWER	PANEL L-OC	METERING PUMP 1	1"C - SEE PANEL SCHEDULE FOR CONDUCTORS
MP1-C	METERING PUMP 1 CONTROL	ODOR CONTROL TERMINATION CABINET	METERING PUMP 1	1"C - (4) #14, (2) #16 TSP, #12 GND
MP2-P	METERING PUMP 2 POWER	PANEL L-OC	METERING PUMP 2	1"C - SEE PANEL SCHEDULE FOR CONDUCTORS
MP2-C	METERING PUMP 2 CONTROL	ODOR CONTROL TERMINATION CABINET	METERING PUMP 2	1"C - (4) #14, (2) #16 TSP, #12 GND
HS2-1	HS2 GAS DETECTOR 1	HS2 GAS DETECTOR 1	NUTRIENT SYSTEM CONTROL PANEL	1"C - (2) #14, (2) #12, #12 GND
HS2-2	HS2 GAS DETECTOR 2	HS2 GAS DETECTOR 2	NUTRIENT SYSTEM CONTROL PANEL	1"C - (2) #14, (2) #12, #12 GND
HS2-3	HS2 GAS DETECTOR 3	HS2 GAS DETECTOR 3	NUTRIENT SYSTEM CONTROL PANEL	1"C - (2) #14, (2) #12, #12 GND

KGI Kalluri Group, Inc.
TBPE Registration No. F-665
16300 Katy Freeway, Suite 172
Houston, Texas 77094
Phone: (713)-365-9288
PROJECT 4285

QUIDDITY
Texas Board of Professional Engineers and Land Surveyors Reg. No. F-23290
6330 West Loop South, Suite 150 • Bellaire, TX 77401 • 713.777.5337

JOB NO: 00050-0099-01 DATE: 5/7/2026

APPROVED BY: RK
DATE: 05/2026
DESIGNED BY: SLJ
DRAWN BY: RHW
SURVEYED BY: WESTERN GROUP CONSULTANTS
FB NO. P-6414

STATE OF TEXAS
STACY L. JORDAN
148233
LICENSED PROFESSIONAL ENGINEER
06.12.2026

CITY OF HOUSTON
HOUSTON PUBLIC WORKS

SCOTT STREET NO. 1 LIFT STATION REHABILITATION
ELECTRICAL

CONDUIT SCHEDULE SHEET 1 - PROPOSED

WBS NUMBER	FOR CITY OF HOUSTON USE ONLY
R-000267-127A-4	
DRAWING SCALE	
AS NOTED	
CITY OF HOUSTON PM	
TAHA LOTIA	
DWG NO. 0-E-22	
SHEET NO. 136 OF 220	

F:\Users\KGI-StacyJordan\Kalluri Group, Inc\KGI - Documents\4285-QEL (Scott Street LS)\Drawings\Electrical\0-E-22 - 23 Conduit Schedules - Proposed.dwg

0 1 2 3 4 5 ORIGINAL SCALE IN INCHES FOR REDUCED PLANS

NO.	DATE	REVISIONS	APP.

TAG	DESCRIPTION	ROUTING		CONDUIT & WIRE SIZES
		FROM	TO	
900	INTRUSION ALARM	DOOR LIMIT SWITCH	WET WEATHER PLC CABINET	2 #14 & #14 GND - 1"RGS
901	VOLTAGE MONITOR RELAY	MOTOR CONTROL CENTER-2B	WET WEATHER PLC CABINET	4 #14 & #14 GND - 1"RGS
902	FORCE MAIN HIGH PRESSURE	PSH-172-01	WET WEATHER PLC CABINET	2-16/2TS CABLES 1" RGS RFI-BE-07
903	VOLTAGE MONITOR RELAY	MOTOR CONTROL CENTER-2A	WET WEATHER PLC CABINET	4 #14 & #14 GND - 1"RGS
1000	RADAR LEVEL INSTRUMENT	WET WEATHER PLC CABINET	AIR CELL NO.1	2" PVC RGS AIR TUBING
WWP1-P	WET WEATHER PUMP NO.1 POWER	MCC-2 PUMP 1 RVSS OUTPUT	PUMP CABLE TERMINATION BOX	2 1/2"C - (3) 2/0, #1/0 GND
WWP1-M	WET WEATHER PUMP NO.1 MOTOR PROTECTION	MCC-2 PUMP 1 RVSS SECTION	PUMP CABLE TERMINATION BOX	1 1/2"C - (22) #14 ,#12 GND
WWP1-E	WET WEATHER PUMP NO.1 E-STOP	PUMP CABLE TERMINATION BOX	PUMP 1 E-STOP SWITCH	1"C - (4) #14, #12 GND
WWP1-MCC	WET WEATHER PUMP NO.1 MCC CONTROLS	MCC-2 PUMP 1 RVSS SECTION	WET WEATHER PLC CABINET	1 1/2"C - (14) #14, #12 GND
WWP2-P	WET WEATHER PUMP NO.2 POWER	MCC-2 PUMP 2 RVSS OUTPUT	PUMP CABLE TERMINATION BOX	2 1/2"C - (3) 2/0, #1/0 GND
WWP2-M	WET WEATHER PUMP NO.2 MOTOR PROTECTION	MCC-2 PUMP 2 RVSS SECTION	PUMP CABLE TERMINATION BOX	1 1/2"C - (22) #14 ,#12 GND
WWP2-C	WET WEATHER PUMP NO.2 E-STOP	PUMP CABLE TERMINATION BOX	PUMP 2 E-STOP SWITCH	1"C - (4) #14, #12 GND
WWP2-MCC	WET WEATHER PUMP NO.2 MCC CONTROLS	MCC-2 PUMP 2 RVSS SECTION	WET WEATHER PLC CABINET	1 1/2"C - (14) #14, #12 GND
WWP3-P	WET WEATHER PUMP NO.3 POWER	MCC-3 PUMP 1 RVSS OUTPUT	PUMP CABLE TERMINATION BOX	(3) 2 1/2"C EACH WITH (3) 250 KCMIL, #1/0 GND
WWP3-M	WET WEATHER PUMP NO.3 MOTOR PROTECTION	MCC-3 PUMP 1 RVSS SECTION	PUMP CABLE TERMINATION BOX	1 1/2"C - (22) #14 ,#12 GND
WWP3-C	WET WEATHER PUMP NO.3 E-STOP	PUMP CABLE TERMINATION BOX	PUMP 3 E-STOP SWITCH	1"C - (4) #14, #12 GND
WWP3-MCC	WET WEATHER PUMP NO.3 MCC CONTROLS	MCC-3 PUMP 1 RVSS SECTION	WET WEATHER PLC CABINET	1 1/2"C - (14) #14, #12 GND
WWP4-P	WET WEATHER PUMP NO.4 POWER	MCC-2 PUMP 4 RVSS OUTPUT	PUMP CABLE TERMINATION BOX	(3) 2 1/2"C EACH WITH (3) 250 KCMIL, #1/0 GND
WWP4-M	WET WEATHER PUMP NO.4 MOTOR PROTECTION	MCC-2 PUMP 4 RVSS SECTION	PUMP CABLE TERMINATION BOX	1 1/2"C - (22) #14 ,#12 GND
WWP4-C	WET WEATHER PUMP NO.4 E-STOP	PUMP CABLE TERMINATION BOX	PUMP 4 E-STOP SWITCH	1"C - (4) #14, #12 GND
WWP4-MCC	WET WEATHER PUMP NO.4 MCC CONTROLS	MCC-2 PUMP 4 RVSS SECTION	WET WEATHER PLC CABINET	1 1/2"C - (14) #14, #12 GND
WWP5-P	WET WEATHER PUMP NO.5 POWER	MCC-2 PUMP 5 RVSS OUTPUT	PUMP CABLE TERMINATION BOX	(3) 2 1/2"C EACH WITH (3) 250 KCMIL, #1/0 GND
WWP5-M	WET WEATHER PUMP NO.5 MOTOR PROTECTION	MCC-2 PUMP 5 RVSS SECTION	PUMP CABLE TERMINATION BOX	1 1/2"C - (22) #14 ,#12 GND
WWP5-C	WET WEATHER PUMP NO.5 E-STOP	PUMP CABLE TERMINATION BOX	PUMP 5 E-STOP SWITCH	1"C - (4) #14, #12 GND
WWP5-MCC	WET WEATHER PUMP NO.5 MCC CONTROLS	MCC-2 PUMP 5 RVSS SECTION	WET WEATHER PLC CABINET	1 1/2"C - (14) #14, #12 GND
WWP6-P	WET WEATHER PUMP NO.6 POWER	MCC-2 PUMP 6 RVSS OUTPUT	PUMP CABLE TERMINATION BOX	(3) 2 1/2"C EACH WITH (3) 250 KCMIL, #1/0 GND
WWP6-M	WET WEATHER PUMP NO.6 MOTOR PROTECTION	MCC-2 PUMP 6 RVSS SECTION	PUMP CABLE TERMINATION BOX	1 1/2"C - (22) #14 ,#12 GND
WWP6-C	WET WEATHER PUMP NO.6 E-STOP	PUMP CABLE TERMINATION BOX	PUMP 6 E-STOP SWITCH	1"C - (4) #14, #12 GND
WWP6-MCC	WET WEATHER PUMP NO.6 MCC CONTROLS	MCC-2 PUMP 6 RVSS SECTION	WET WEATHER PLC CABINET	1 1/2"C - (14) #14, #12 GND
WWP7-P	WET WEATHER PUMP NO.7 POWER	MCC-2 PUMP 7 RVSS OUTPUT	PUMP CABLE TERMINATION BOX	(3) 2 1/2"C EACH WITH (3) 250 KCMIL, #1/0 GND
WWP7-M	WET WEATHER PUMP NO.7 MOTOR PROTECTION	MCC-2 PUMP 7 RVSS SECTION	PUMP CABLE TERMINATION BOX	1 1/2"C - (22) #14 ,#12 GND
WWP7-C	WET WEATHER PUMP NO.7 E-STOP	PUMP CABLE TERMINATION BOX	PUMP 7 E-STOP SWITCH	1"C - (4) #14, #12 GND
WWP7-MCC	WET WEATHER PUMP NO.7 MCC CONTROLS	MCC-2 PUMP 7 RVSS SECTION	WET WEATHER PLC CABINET	1 1/2"C - (14) #14, #12 GND
WWP8-P	WET WEATHER PUMP NO.8 POWER	MCC-2 PUMP 8 RVSS OUTPUT	PUMP CABLE TERMINATION BOX	(3) 2 1/2"C EACH WITH (3) 250 KCMIL, #1/0 GND
WWP8-M	WET WEATHER PUMP NO.8 MOTOR PROTECTION	MCC-2 PUMP 8 RVSS SECTION	PUMP CABLE TERMINATION BOX	1 1/2"C - (22) #14 ,#12 GND
WWP8-C	WET WEATHER PUMP NO.8 E-STOP	PUMP CABLE TERMINATION BOX	PUMP 8 E-STOP SWITCH	1"C - (4) #14, #12 GND
WWP8-MCC	WET WEATHER PUMP NO.8 MCC CONTROLS	MCC-2 PUMP 8 RVSS SECTION	WET WEATHER PLC CABINET	1 1/2"C - (14) #14, #12 GND
605	SUMP PUMPS CONTROL PANEL-1	MOTOR CONTROL CENTER	SUMP PUMPS CONTROL PANEL-1 & PUMPS 1 & 2	20 #14 (4 SPARE, 2 #12(CT) & #14 GND - 1 1/2" PVC RGS)
610	SUMP PUMPS CONTROL PANEL-2	MOTOR CONTROL CENTER	SUMP PUMPS CONTROL PANEL-1 & PUMPS 3 & 4	3/C #4 & #6 GND CABLE - 1" RGS
615	DRAIN PUMP-1 POWER	MOTOR CONTROL CENTER	DRAIN PUMP-1	3 #12 & #12 GND - 1" RGS
616	DRAIN PUMP-1 CONTROL	MOTOR CONTROL CENTER	DRAIN PUMP-1 & -S-172-13	6 #14 & #14 GND - 1" RGS
617	DRAIN PUMP-1 CONTROL	MOTOR CONTROL CENTER	WET WEATHER PLC CABINET	15 #14 (4 SPARE),& #14 GND - 14/2" PVC RGS
618	DRAIN PUMP-1 CONTROL	MOTOR CONTROL CENTER	WET WEATHER PLC CABINET	1 SHIELDED PAIR #16 - 3/4" RGS
620	DRAIN PUMP-2 POWER	MOTOR CONTROL CENTER	DRAIN PUMP-2	3 #12 & #12 GND - 1" RGS
621	DRAIN PUMP-2 CONTROL	MOTOR CONTROL CENTER	DRAIN PUMP-2 & HS-172-14	6 #14 & #14 GND - 1" RGS
622	DRAIN PUMP-2 CONTROL	MOTOR CONTROL CENTER	WET WEATHER PLC CABINET	15 #14 (4 SPARE),& #14 GND - 14/2" PVC RGS
623	DRAIN PUMP-2 CONTROL	MOTOR CONTROL CENTER	WET WEATHER PLC CABINET	1 SHIELDED PAIR #16 - 3/4" RGS
625	AIR COMPRESSORS CONTROL PANEL	MOTOR CONTROL CENTER	AIR COMPRESSORS CONTROL PANEL	3 #10 & #10 GND - 1" RGS

KGI Kalluri Group, Inc.
TBPE Registration No. F-665
16300 Katy Freeway, Suite 172
Houston, Texas 77094
Phone: (713)-365-9288
PROJECT 4285

QUIDDITY
Texas Board of Professional Engineers and Land Surveyors Reg. No. F-23290
6330 West Loop South, Suite 150 • Bellaire, TX 77401 • 713.777.5337

JOB NO: 00050-0099-01 DATE: 5/7/2026

APPROVED BY: RK

DATE: 05/2026

DESIGNED BY: SLJ

DRAWN BY: RHW

SURVEYED BY: WESTERN GROUP CONSULTANTS
FB NO. P-6414

STATE OF TEXAS
STACY L. JORDAN
148233
LICENSED PROFESSIONAL ENGINEER
05.12.2026

CITY OF HOUSTON
HOUSTON PUBLIC WORKS

SCOTT STREET NO. 1 LIFT STATION REHABILITATION
ELECTRICAL

CONDUIT SCHEDULE SHEET 1 - PROPOSED

WBS NUMBER
R-000267-127A-4

DRAWING SCALE
AS NOTED

CITY OF HOUSTON PM
TAHA LOTIA

DWG NO. 0-E-23

SHEET NO. 137 OF 220

FOR CITY OF HOUSTON USE ONLY

F:\Users\KGI-StacyJordan\Kalluri Group, Inc\KGI - Documents\4285-QEL (Scott Street LS)\Drawings\Electrical\0-E-22 - 23 Conduit Schedules - Proposed.dwg

ORIGINAL SCALE IN INCHES FOR REDUCED PLANS

NO.	DATE	REVISIONS	APP.

DUCT BANK CONCRETE ENCASEMENT SHALL BE CONTINUOUS AND DUCT BANK REINFORCEMENT REBAR SHALL BE CONNECTED TO THE DESTINATION. FOR PULL BOX ENTRY OR RISING NEXT TO A STRUCTURE DRILL BOX OR STRUCTURE AND PROVIDE #5 DOWELS 4 INCHES DEEP. FOR ENTRY TO STRUCTURE SLAB OR FOUNDATIONS CONNECT BOTH REINFORCEMENT REBAR SYSTEMS WITH 6 INCH OVERLAP DOUBLE TIED.

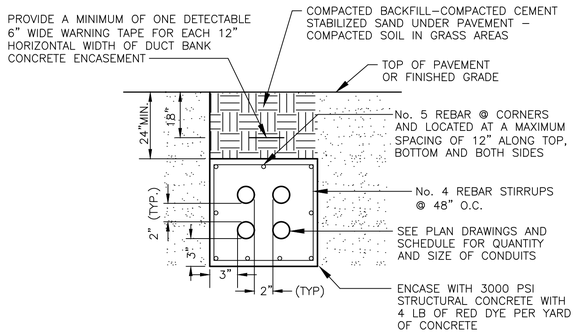

TYPICAL DUCT BANK INSTALLATION

DETAIL 1 – NTS

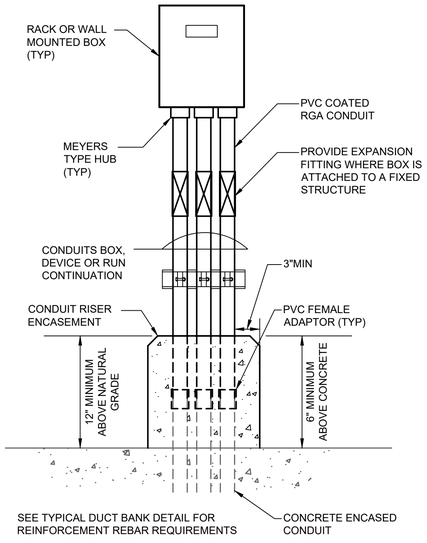

CONDUIT RISER CONCRETE ENCASEMENT

DETAIL 2 – NTS

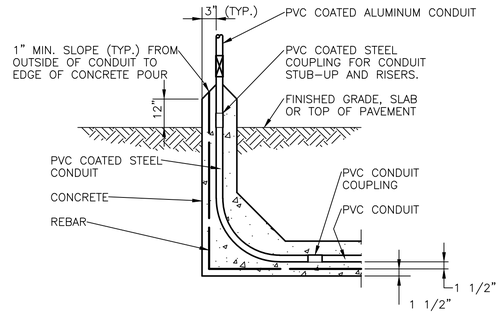

TYPICAL SINGLE CONDUIT DUCT BANK STUB–UP

DETAIL 3 – NTS

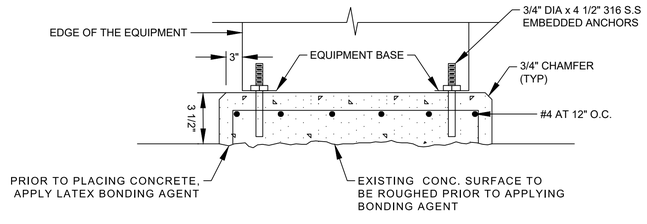

EQUIPMENT HOUSEKEEPING CONCRETE PAD

DETAIL 4 – NTS

KGI Kalluri Group, Inc.

TBPE Registration No. F–665
16300 Katy Freeway, Suite 172
Houston, Texas 77094
Phone: (713)–365–9288
PROJECT 4285

QUIDDITY

Texas Board of Professional Engineers and Land Surveyors Reg. No. F-23290
6330 West Loop South, Suite 150 • Bellaire, TX 77401 • 713.777.5337

JOB NO: 00050–0099–01 DATE: 5/7/2026

APPROVED BY: RK
DATE: 05/2026
DESIGNED BY: SLJ
DRAWN BY: RHW
SURVEYED BY: WESTERN GROUP CONSULTANTS
FB NO. P–6414

STATE OF TEXAS
STACY L. JORDAN
148233
LICENSED
PROFESSIONAL ENGINEER
06.12.2026

CITY OF HOUSTON
HOUSTON PUBLIC WORKS

SCOTT STREET NO. 1
LIFT STATION REHABILITATION
ELECTRICAL

ELECTRICAL DETAILS
SHEET 1

WBS NUMBER	FOR CITY OF HOUSTON USE ONLY
R–000267–127A–4	
DRAWING SCALE	
AS NOTED	
CITY OF HOUSTON PM	
TAHA LOTIA	
DWG NO. 0–E–91	
SHEET NO. 138 OF 220	

F:\Users\KGI-StacyJordan\Kalluri Group, Inc\KGI - Documents\4285-QEL (Scott Street LS)\Drawings\Electrical\0-E-91 Electrical Details Sheet 1.dwg

ORIGINAL SCALE IN INCHES FOR REDUCED PLANS

NO.	DATE	REVISIONS	APP.

ATTACH STAMPED STAINLESS STEEL IDENTIFICATION TAGS TO CABLES AT EACH LOCATION WHERE CABLES ENTER THE PULL BOX. ATTACH TAGS WITH STAINLESS STEEL WIRE. TAGS TO LIST THE FOLLOWING IN 3/16" LETTERS: CIRCUIT IDENTIFICATION, CABLE SIZES (PHASE, GROUND, TSP, FO CABLE, ETC.) AND DATE INSTALLED.

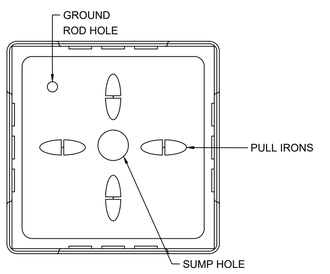

PLAN VIEW

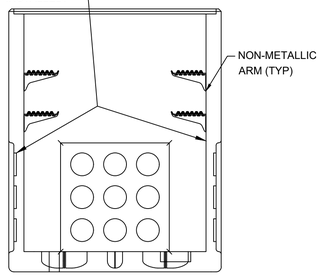

ELEVATION VIEW

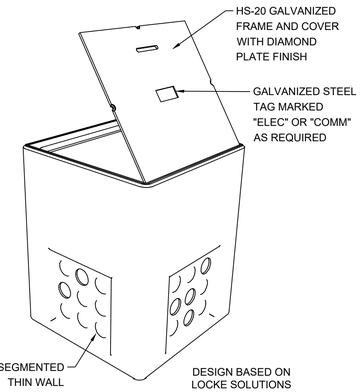

STANDARD PULL BOX SIZES

DESIGANTION	INSIDE WIDTH (W)	INSIDE LENGTH (L)	INSIDE DEPTH (D)
E1	12"	24"	22"
E2	24"	24"	42"
E3	36"	36"	48"
E4	48"	48"	48"
E5	48"	48"	60"
I1	12"	24"	22"
I2	24"	24"	42"
I3	36"	36"	48"
I4	48"	48"	48"

NOTES:
1. COVERS FOR ALL PULL BOXES TO BE HOT-DIP GALVANIZED AND DESIGNED FOR AASHTO HS-20 LOADING.
2. "E" PULL BOXES TO HAVE "ELEC" TAG ON THE COVER.
3. "I" PULL BOXES TO HAVE "COMM" TAG ON THE COVER.
4. "C" PULL BOXES TO HAVE "CONTROLS" TAG ON THE COVER.

STANDARD PULL BOXES

DETAIL 1 - NTS

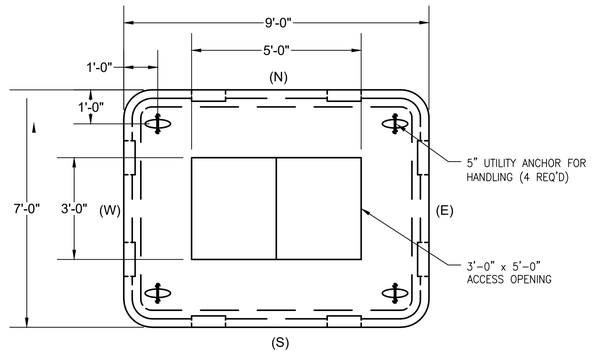

PLAN VIEW
(TOP BASE)

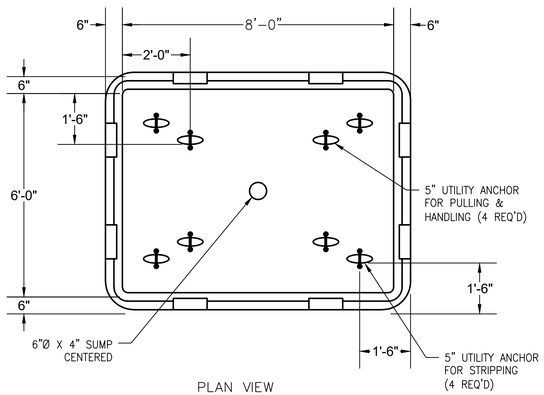

PLAN VIEW
(BASE BASE)

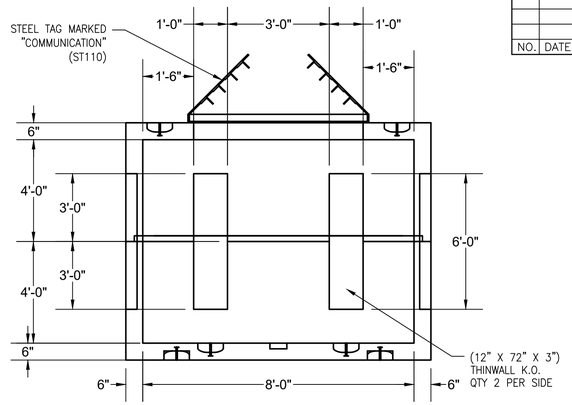

ELEVATION VIEW

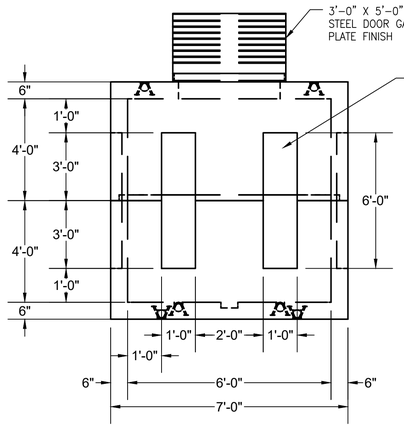

VIEW LOOKING WEST
ELEVATION VIEW

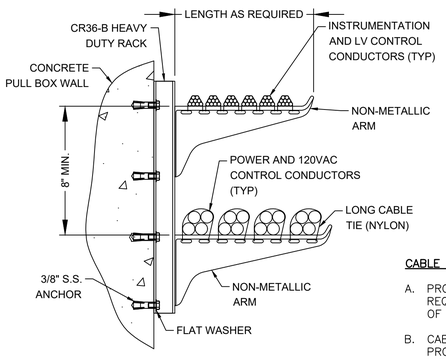

PULL BOX CABLE RACK INSTALLATION

DETAIL 2 - NTS

CABLE RACK NOTES:

A. PROVIDE UNDERGROUND DEVICES CABLE RACK SYSTEMS AS REQUIRED TO SUPPORT CABLES ROUTED AROUND THE WALLS OF THE UNDERGROUND PULL BOX.

B. CABLES SHALL BE SECURED TO RACK ARMS WITH CABLE TIES, PROVIDE UNDERGROUND DEVICES, INC. NO. 36 VERTICAL RACK WITH 14" ARMS AS REQUIRED. SECURE RACKS TO PULL BOX WALLS WITH 316 SS HARDWARE.

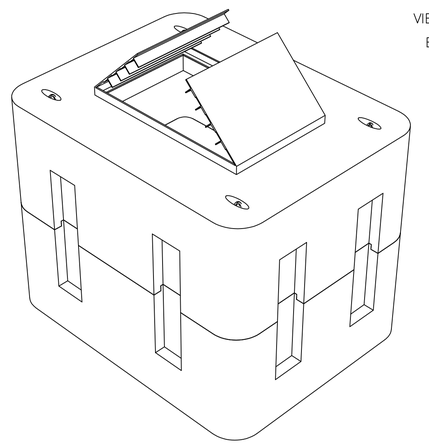

E-6 PULL BOX

DETAIL 3 - NTS

KGI Kalluri Group, Inc.
TBPE Registration No. F-665
16300 Katy Freeway, Suite 172
Houston, Texas 77094
Phone: (713)-365-9288
PROJECT 4285

QUIDDITY
Texas Board of Professional Engineers and Land Surveyors Reg. No. F-23290
6330 West Loop South, Suite 150 • Bellaire, TX 77401 • 713.777.5337

JOB NO: 00050-0099-01 DATE: 5/7/2026

APPROVED BY: RK

DATE: 05/2026

DESIGNED BY: SLJ

DRAWN BY: RHW

SURVEYED BY: WESTERN GROUP CONSULTANTS
FB NO. P-6414

STATE OF TEXAS
STACY L. JORDAN
148233
LICENSED PROFESSIONAL ENGINEER
05.12.2026

CITY OF HOUSTON
HOUSTON PUBLIC WORKS

SCOTT STREET NO. 1 LIFT STATION REHABILITATION
ELECTRICAL

ELECTRICAL DETAILS SHEET 2

WBS NUMBER	FOR CITY OF HOUSTON USE ONLY
R-000267-127A-4	
DRAWING SCALE	
AS NOTED	
CITY OF HOUSTON PM	
TAHA LOTIA	
DWG NO. 0-E-92	
SHEET NO. 139 OF 220	

F:\Users\KGI-StacyJordan\Kalluri Group, Inc\KGI - Documents\4285-QEL (Scott Street LS)\Drawings\Electrical\0-E-92 Electrical Details Sheet 2.dwg

ORIGINAL SCALE IN INCHES FOR REDUCED PLANS

NO.	DATE	REVISIONS	APP.

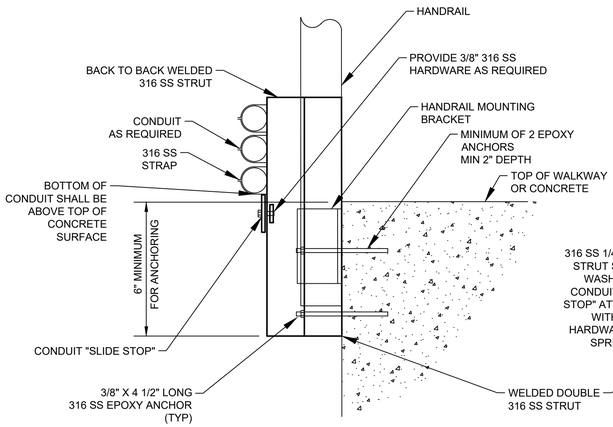

SIDE VIEW
EDGE OF STRUCTURE CONDUIT SUPPORT

A DETAIL
NTS

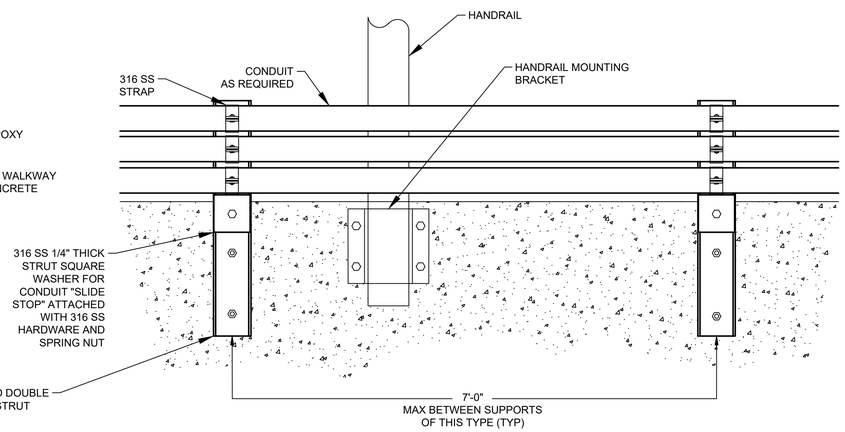

ELEVATION
EDGE OF STRUCTURE CONDUIT SUPPORT

B DETAIL
NTS

TYPICAL WALL PENETRATION

C DETAIL
NTS

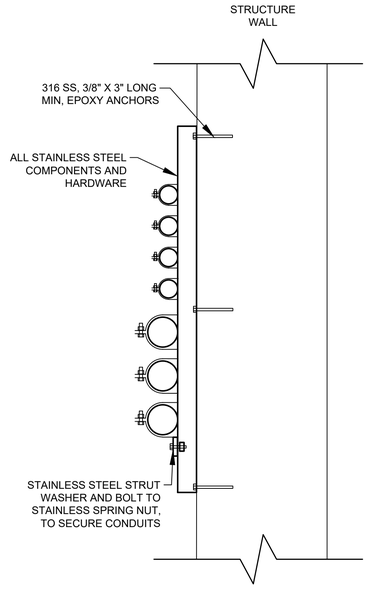

TYPICAL VERTICAL WALL RACK

D DETAIL
NTS

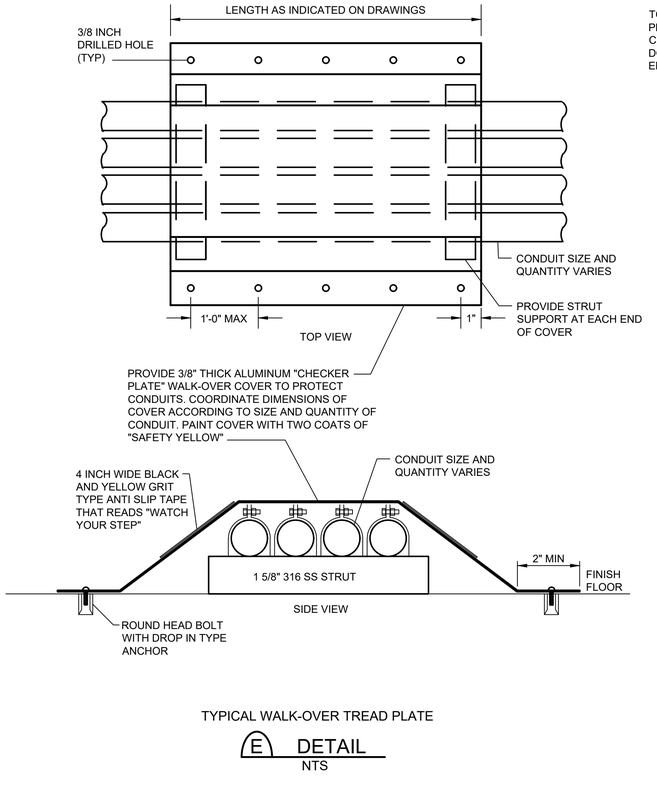

TYPICAL WALK-OVER TREAD PLATE

E DETAIL
NTS

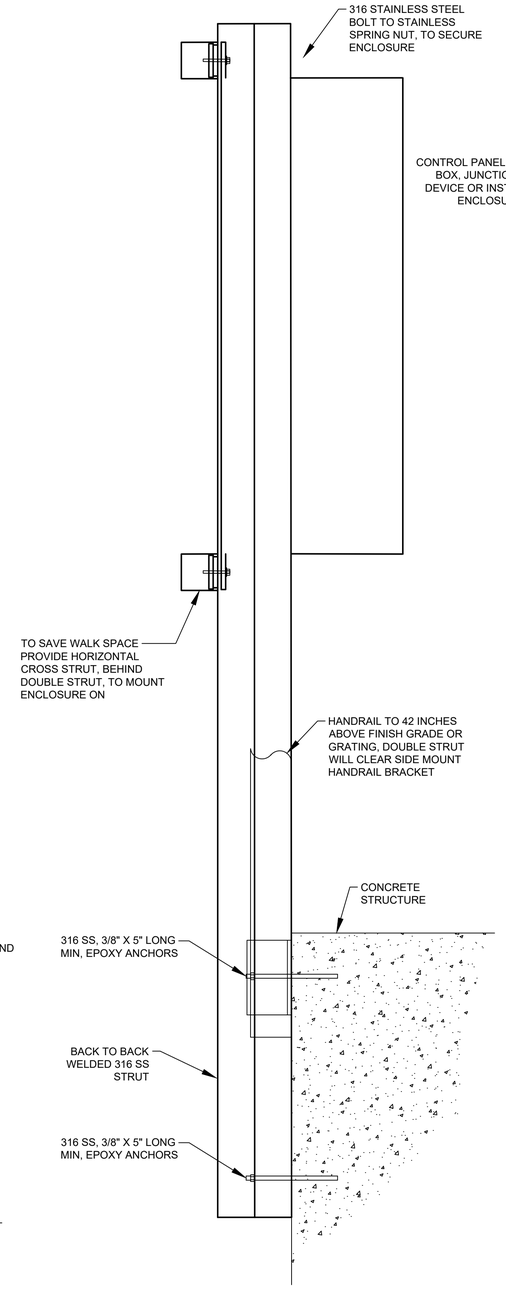

EDGE OF STRUCTURE PANEL SUPPORT

F DETAIL
NTS

BENCH MARK
A BRASS DISC STAMPED "RM 070215" LOCATED AT THE END OF YAUPON HOLLY LANE AT ITS INTERSECTION WITH EASTERN REDBUD LANE, ON TOP OF A "B-B" INLET AT THE NORTHWEST CORNER OF THE INTERSECTION.
ELEVATION = 64.76 FEET NAVD 88 (2001 ADJUSTMENT)

T.B.M. "A"
A CHISELED SQUARE ON THE BULL NOSE OF THE ESPLANADE LOCATED ON WEST LAKE HOUSTON PARKWAY APPROXIMATELY 970 FEET NORTH OF THE CENTERLINE INTERSECTION OF SUMMER LAKE RANCH DRIVE AND WEST LAKE HOUSTON PARKWAY.
ELEVATION = 55.34 FEET NAVD 88 (2001 ADJUSTMENT)

T.B.M. "B"
A CHISELED SQUARE ON TOP OF A "B-B" INLET AT THE SOUTHWEST CORNER OF THE INTERSECTION OF SUMMER LAKE RANCH DRIVE AND WEST LAKE HOUSTON PARKWAY.
ELEVATION = 53.67 FEET NAVD 88 (2001 ADJUSTMENT)

100-YEAR FLOOD PLAIN
ACCORDING TO MAP No. 48201C0510L OF THE FEDERAL EMERGENCY MANAGEMENT AGENCY'S (FEMA) FLOOD INSURANCE RATE MAP (FIRM) FOR HARRIS COUNTY, TEXAS AND INCORPORATED AREAS, DATED JUNE 18, 2007, THE SUBJECT TRACT IS SITUATED WITHIN UNSHADED ZONE "X"; DEFINED AS AREAS DETERMINED TO BE OUTSIDE THE 0.2% ANNUAL CHANCE FLOODPLAIN (500-YEAR FLOOD).

KGI Kalluri Group, Inc.
TBPE Registration No. F-665
16300 Katy Freeway, Suite 172
Houston, Texas 77094
Phone: (713)-365-9288
PROJECT 4285

QUIDDITY
Texas Board of Professional Engineers and Land Surveyors Reg. No. F-23290
6330 West Loop South, Suite 150 • Bellaire, TX 77401 • 713.777.5337

JOB NO: 00050-0099-01 DATE: 5/7/2026

APPROVED BY: RK
DATE: 05/2026
DESIGNED BY: SLJ
DRAWN BY: RHW
SURVEYED BY: WESTERN GROUP CONSULTANTS
FB NO. P-6414

STATE OF TEXAS
STACY L. JORDAN
148233
LICENSED PROFESSIONAL ENGINEER
06.12.2026

CITY OF HOUSTON
HOUSTON PUBLIC WORKS

SCOTT STREET NO. 1 LIFT STATION REHABILITATION
ELECTRICAL

ELECTRICAL DETAILS SHEET 3

WBS NUMBER	FOR CITY OF HOUSTON USE ONLY
R-000267-127A-4	
DRAWING SCALE	
AS NOTED	
CITY OF HOUSTON PM	
TAHA LOTIA	
DWG NO. O-E-93	
SHEET NO. 140 OF 220	

F:\Users\KGI-StacyJordan\Kalluri Group, Inc\KGI - Documents\4285-QEL (Scott Street LS)\Drawings\Electrical\0-E-93 Electrical Details Sheet 3.dwg

ORIGINAL SCALE IN INCHES FOR REDUCED PLANS

NO.	DATE	REVISIONS	APP.

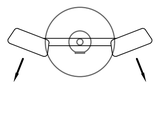

P2 POLE PLAN VIEW

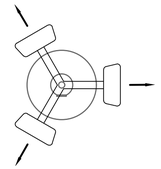

P3 POLE PLAN VIEW

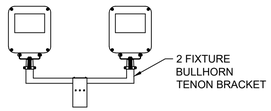

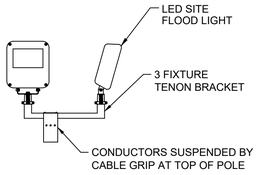

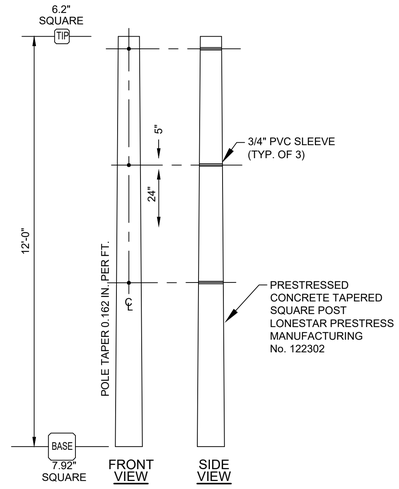

CONCRETE POST DETAIL

C DETAIL
NTS

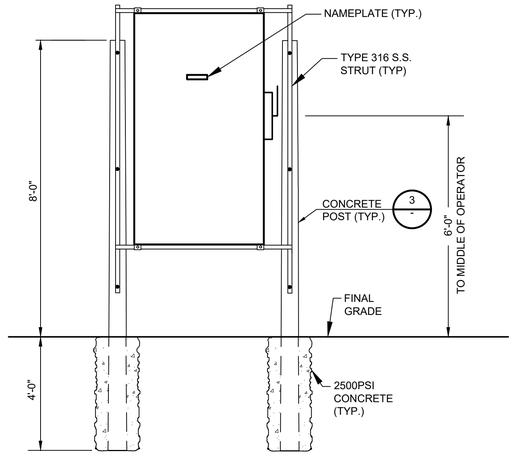

MOBILE GENERATOR CONNECTION CABINET SUPPORT

E DETAIL
NTS

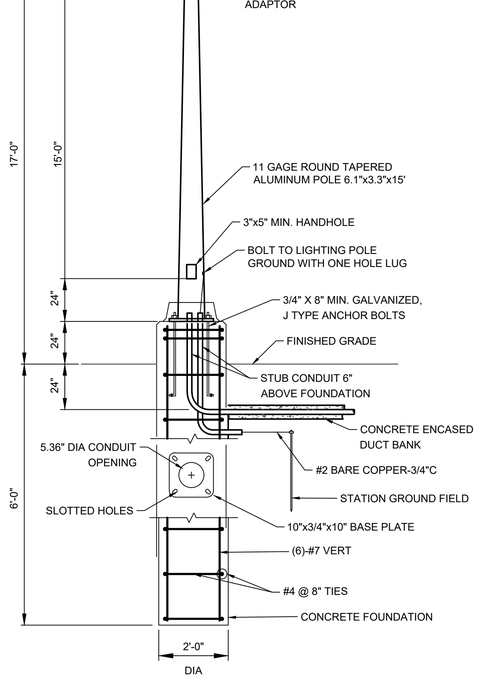

SITE LIGHT

A DETAIL
NTS

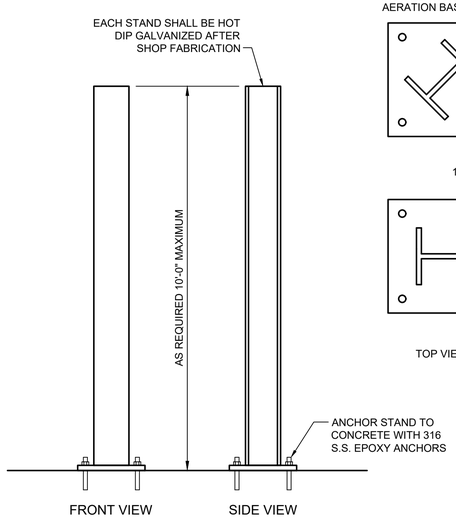

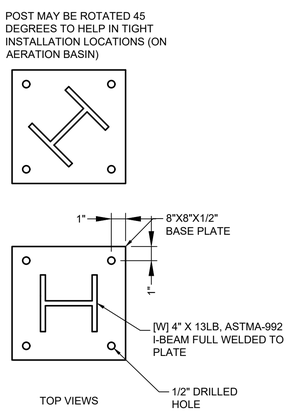

VERTICAL SUPPORT

D DETAIL
NTS

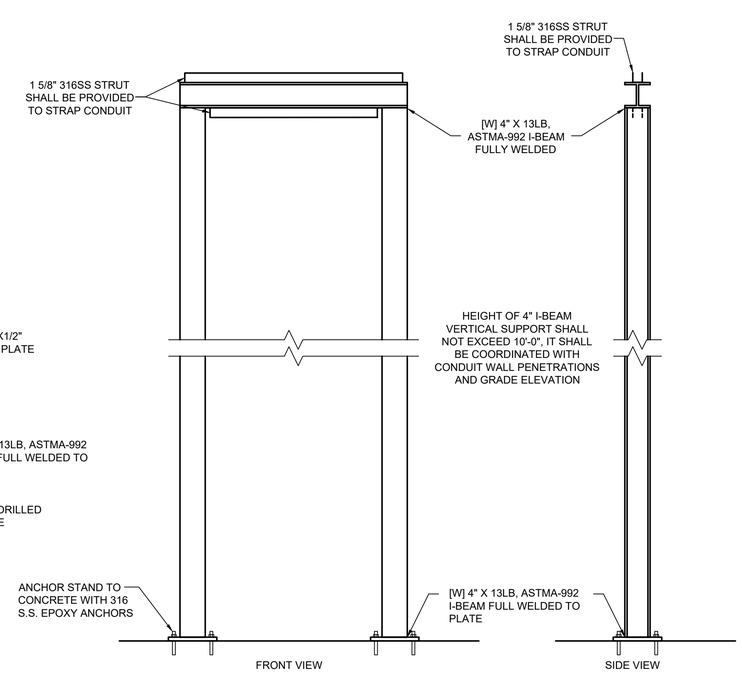

OVERHEAD CONDUIT SUPPORT

D DETAIL
NTS

KGI Kalluri Group, Inc.
TBPE Registration No. F-665
16300 Katy Freeway, Suite 172
Houston, Texas 77094
Phone: (713)-365-9288
PROJECT 4285

QUIDDITY
Texas Board of Professional Engineers and Land Surveyors Reg. No. F-23290
6330 West Loop South, Suite 150 • Bellaire, TX 77401 • 713.777.5337

JOB NO: 00050-0099-01 DATE: 5/7/2026

APPROVED BY: RK
DATE: 05/2026
DESIGNED BY: SLJ
DRAWN BY: RHW
SURVEYED BY: WESTERN GROUP CONSULTANTS
FB NO. P-6414

STATE OF TEXAS
STACY L. JORDAN
148233
LICENSED
PROFESSIONAL ENGINEER
06.12.2026

CITY OF HOUSTON
HOUSTON PUBLIC WORKS

SCOTT STREET NO. 1 LIFT STATION REHABILITATION
ELECTRICAL

ELECTRICAL DETAILS SHEET 4

WBS NUMBER	FOR CITY OF HOUSTON USE ONLY
R-000267-127A-4	
DRAWING SCALE	
AS NOTED	
CITY OF HOUSTON PM	
TAHA LOTIA	
DWG NO. O-E-94	
SHEET NO. 141 OF 220	

F:\Users\KGI-StacyJordan\Kalluri Group, Inc\KGI - Documents\4285-QEL (Scott Street LS)\Drawings\Electrical\0-E-94 Electrical Details Sheet 4.dwg

ORIGINAL SCALE IN INCHES FOR REDUCED PLANS

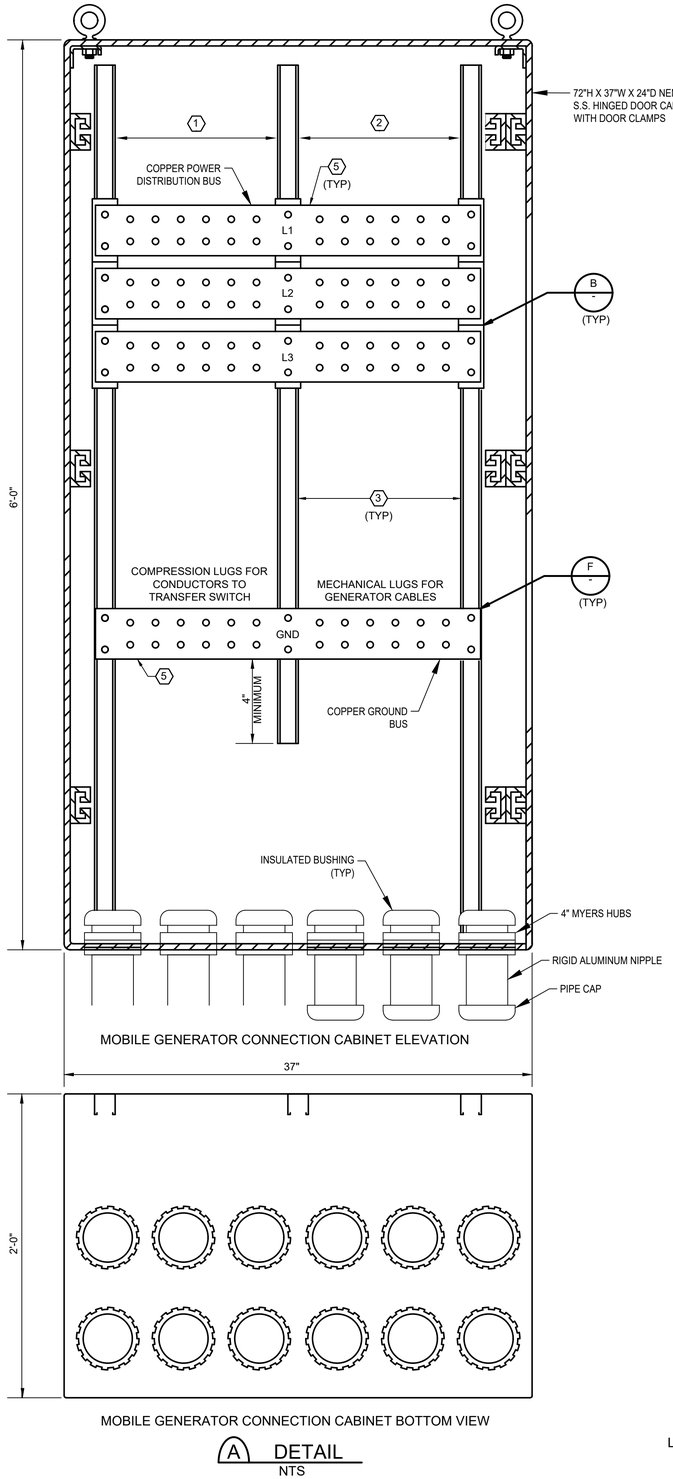

MOBILE GENERATOR CONNECTION CABINET ELEVATION

MOBILE GENERATOR CONNECTION CABINET BOTTOM VIEW

A DETAIL
NTS

CONTRACTOR SHALL PROVIDE A SHOP DRAWING FOR THE GENERATOR CONNECTION CABINET.

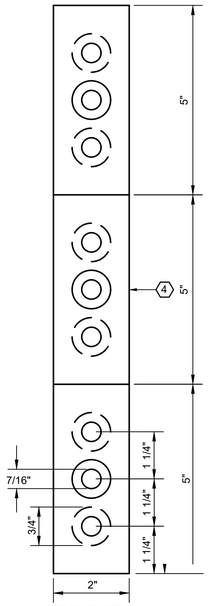

FRONT VIEW

PHASE BUS INSULATED SUPPORT

B DETAIL
NTS

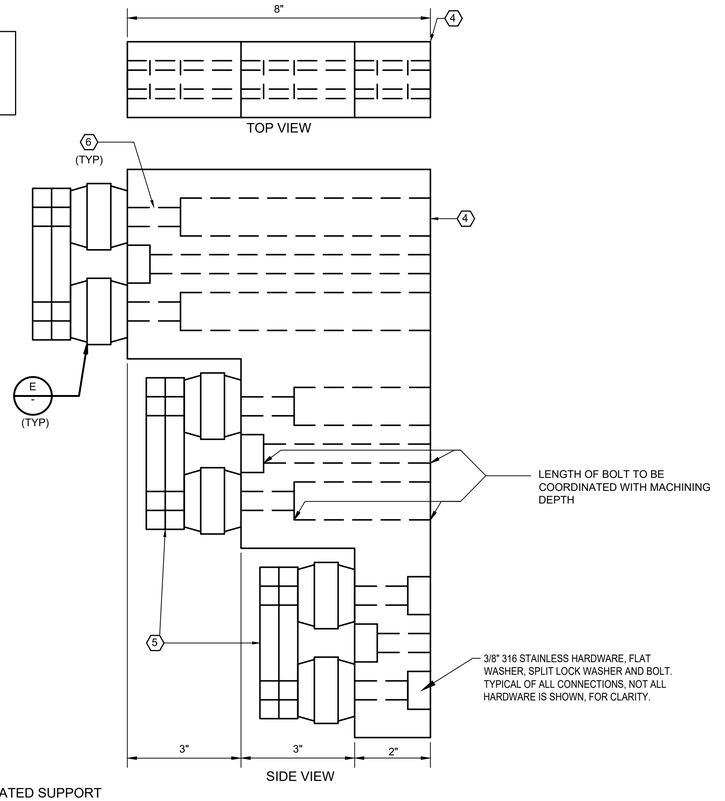

SIDE VIEW

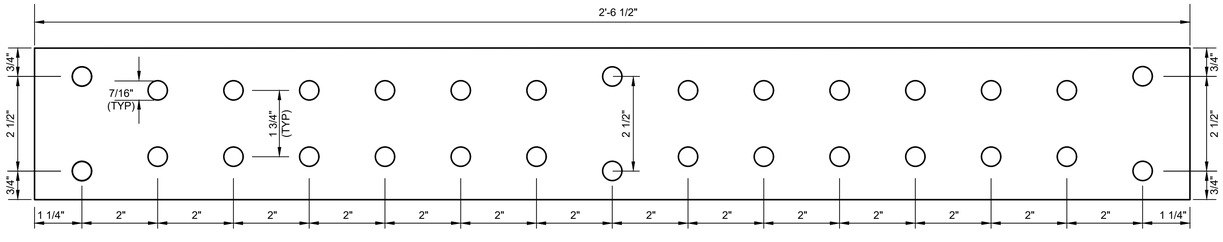

TYPICAL BUS HOLE LAYOUT

C DETAIL
NTS

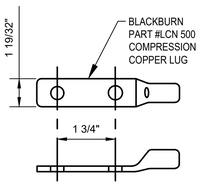

LUGS FOR CABLES TO TRANSFER SWITCH

D DETAIL
NTS

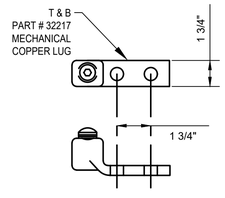

LUGS FOR CABLES TO PORTABLE GENERATOR

E DETAIL
NTS

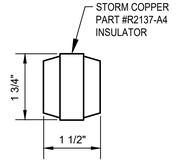

INSULATOR

F DETAIL
NTS

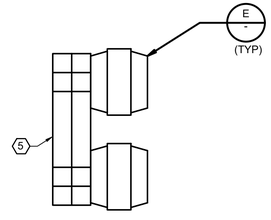

GROUND BUS INSULATED SUPPORT

G DETAIL
NTS

NO.	DATE	REVISIONS	APP.

NOTES:

1. CABLES CONNECTED TO TRANSFER SWITCH.
2. PROVISIONS TO CONNECT PORTABLE GENERATOR CABLES.
3. TYPE 316 STAINLESS STEEL 1 5/8" 12 GAUGE STRUT.
4. 2" THICK MICARTA INSULATING BOARD.
5. (2) 1/2" X 4" COPPER BAR.
6. TYPE 316 STAINLESS STEEL BOLTS.

KGI Kalluri Group, Inc.
TBPE Registration No. F-665
16300 Katy Freeway, Suite 172
Houston, Texas 77094
Phone: (713)-365-9288
PROJECT 4285

QUIDDITY
Texas Board of Professional Engineers and Land Surveyors Reg. No. F-23290
6330 West Loop South, Suite 150 • Bellaire, TX 77401 • 713.777.5337

JOB NO: 00050-0099-01 DATE: 5/7/2026

APPROVED BY: RK

DATE: 05/2026

DESIGNED BY: SLJ

DRAWN BY: RHW

SURVEYED BY: WESTERN GROUP CONSULTANTS
FB NO. P-6414

STATE OF TEXAS
STACY L. JORDAN
148233
LICENSED
PROFESSIONAL ENGINEER
06.12.2026

CITY OF HOUSTON
HOUSTON PUBLIC WORKS

SCOTT STREET NO. 1 LIFT STATION REHABILITATION
ELECTRICAL

ELECTRICAL DETAILS SHEET 5

WBS NUMBER	FOR CITY OF HOUSTON USE ONLY
R-000267-127A-4	
DRAWING SCALE	
AS NOTED	
CITY OF HOUSTON PM	
TAHA LOTIA	
DWG NO. 0-E-95	
SHEET NO. 142 OF 220	

F:\Users\KGI-StacyJordan\Kalluri Group, Inc\KGI - Documents\4285-QEL (Scott Street LS)\Drawings\Electrical\0-E-95 Electrical Details Sheet 5.dwg

0 1 2 3 4 5 ORIGINAL SCALE IN INCHES FOR REDUCED PLANS

NO.	DATE	REVISIONS	APP.

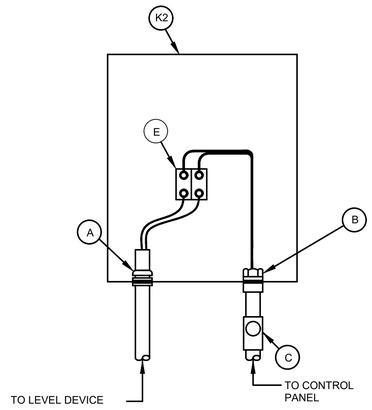

LEVEL SIGNAL JUNCTION BOX

A DETAIL
NTS

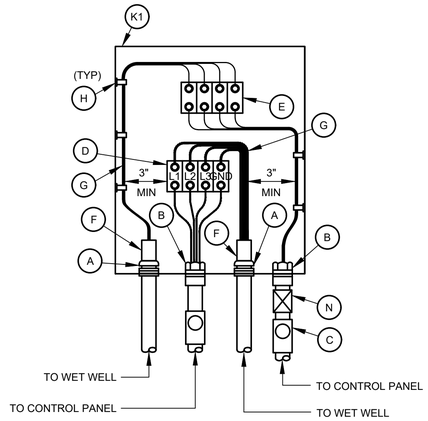

PUMP CABLE JUNCTION BOX

B DETAIL
NTS

JUNCTION BOX EQUIPMENT SCHEDULE

- A - OZ GEDNEY CSBE SEAL WITH 316 S.S. PRESSURE PLATES AND HARDWARE
- B - WATERTIGHT CONDUIT HUB WITH INSULATED BUSHING
- C - CLASS I, DIV 1, EXLOSION PROOF SEAL INSTALLED PER NEC DIV 501
- D - POWER TERMINAL BLOCK W/SCREW DOWN BOX LUGS
- E - CONTROL TERM BLOCK W/SCREW DOWN BOX LUGS
- F - MULTI-CONDUCTOR CABLE, REMOVE OUTER JACKET AS SHOWN
- G - WIRING AS SCHEDULED
- H - WIRING HARNESS PERMANENTLY AFFIXED
- I - PUMP CONTROL WIRING FROM PUMPS 2; 2 & 3; 4; OR D2, AS APPLICABLE
- J - 1 1/2" PVC COATED CONDUIT NIPPLE
- K1 - NEMA 4X 316 STAINLESS STEEL JUNCTION BOX WITH GASKETED FRONT COVER, SINGLE QUARTER TURN, OIL-TIGHT LATCH AND PADLOCKING PROVISIONS, HOFFMAN A24H2010SS6LP OR EQUAL. MINIMUM SIZE: 20"W X 24"H X 10"D
- K2 - NEMA 4X 316 STAINLESS STEEL JUNCTION BOX WITH GASKETED FRONT COVER, SINGLE QUARTER TURN, OIL-TIGHT LATCH AND PADLOCKING PROVISIONS, HOFFMAN A16H1206SS6LP OR EQUAL. MINIMUM SIZE: 12"W X 16"H X 6"D
- L - NAMEPLATE, 3/8" HIGH LETTERS IN WHITE ON BLACK BAKELIGHT (SEE NAMEPLATE SCHEDULE)
- M - TRANSDUCER BREATHER PERMANENTLY AFFIXED
- N - EXPANSION JOINT/SLEEVES

GENERAL NOTES:

A. NAMEPLATES SHALL BE MOUNTED TO JUNCTION BOXES USING 316 STAINLESS STEEL HARDWARE.

B. MAINTAIN MINIMUM SEPARATION REQUIRED UNDER NEC ARTICLE 504, BETWEEN INTRINSICALLY SAFE CONTROL WIRING AND NON-INTRINSICALLY SAFE MOTOR FEEDER WIRING.

D. UNLESS OTHERWISE NOTED, ALL EXPOSED CONDUITS SHALL BE PVC COATED RIGID GALVANIZED STEEL.

E. UNLESS OTHERWISE NOTED, ALL NUTS, BOLTS, SCREWS WASHERS, ETC SHALL BE TYPE 316 STAINLESS STEEL.

F. ALL UNDERGROUND CONDUITS TO BE ENCASED IN REINFORCED CONCRETE DUCT BANK.

G. PROVIDE ANTI-CORROSIVE SPRAY ON ANY BARE METAL PARTS OR EXPOSED WIRE.

STRUT VERTICAL SUPPORTS ARE SHOWN HERE, CONDITIONS MAY REQUIRE TYPICAL VERTICAL I-BEAM SUPPORT

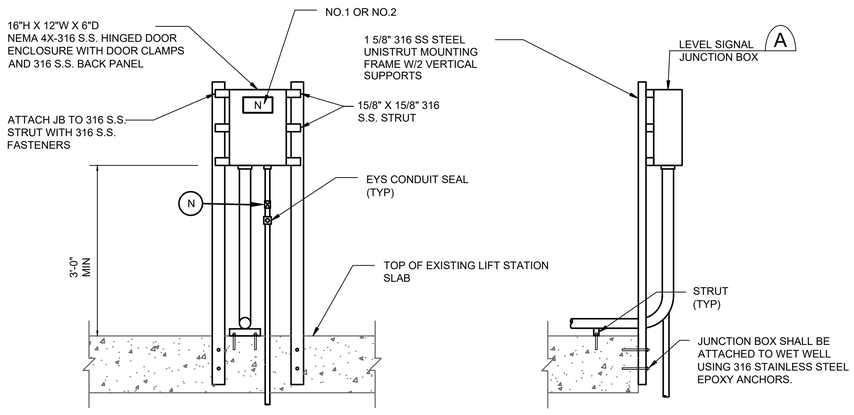

LEVEL SIGNAL JUNCTION BOX ELEVATION

C DETAIL
NTS

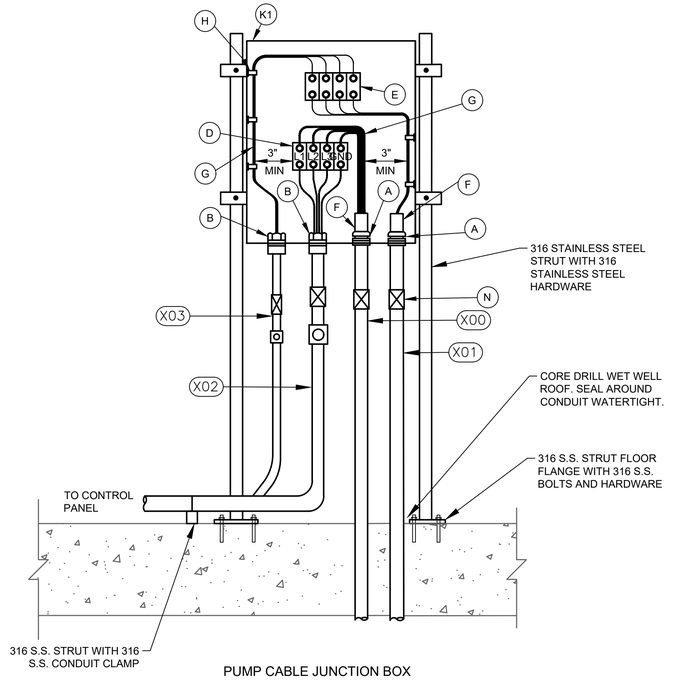

PUMP CABLE JUNCTION BOX

D DETAIL
NTS

KGI Kalluri Group, Inc.
TBPE Registration No. F-665
16300 Katy Freeway, Suite 172
Houston, Texas 77094
Phone: (713)-365-9288
PROJECT 4285

QUIDDITY
Texas Board of Professional Engineers and Land Surveyors Reg. No. F-23290
6330 West Loop South, Suite 150 • Bellaire, TX 77401 • 713.777.5337

JOB NO: 00050-0099-01 DATE: 5/7/2026

APPROVED BY: RK

DATE: 05/2026

DESIGNED BY: SLJ

DRAWN BY: RHW

SURVEYED BY: WESTERN GROUP CONSULTANTS
FB NO. P-6414

STATE OF TEXAS
STACY L. JORDAN
148233
LICENSED PROFESSIONAL ENGINEER
06.12.2026

CITY OF HOUSTON
HOUSTON PUBLIC WORKS

SCOTT STREET NO. 1
LIFT STATION REHABILITATION
ELECTRICAL

ELECTRICAL DETAILS
SHEET 6

WBS NUMBER	FOR CITY OF HOUSTON USE ONLY
R-000267-127A-4	
DRAWING SCALE	
AS NOTED	
CITY OF HOUSTON PM	
TAHA LOTIA	
DWG NO. O-E-96	
SHEET NO. 143 OF 220	

F:\Users\KGI-StacyJordan\Kalluri Group, Inc\KGI - Documents\4285-QEL (Scott Street LS)\Drawings\Electrical\0-E-96 Electrical Details Sheet 6.dwg

ORIGINAL SCALE IN INCHES FOR REDUCED PLANS

NO.	DATE	REVISIONS	APP.

KEYED NOTES:

1. ALL EXPOSED CONDUIT AT THE DRY WEATHER PUMP STATION, INSIDE THE WET WELL AND OUTSIDE OF IT, IS TO BE REMOVED AND REPLACED WITH PVC COATED RIGID ALUMINUM CONDUIT. THE INTENT OF THE DESIGN IS TO UTILIZE THE EXISTING CONCRETE EMBEDDED CONDUIT. HORIZONTAL SURFACE MOUNTED CONDUIT IS NOT ACCEPTABLE.
2. EXISTING GROUNDING SYSTEM IS TO BE MAINTAINED WITH EXOTHERMICALLY WELDED SPLICES.
3. EXISTING TERMINATION BOXES ARE TO BE REMOVED AND REPLACED WITH NEW BOXES PER DETAILS.
4. EXISTING GROUND SYSTEM IS TO BE CONNECTED TO PROPOSED BOXES.
5. PROPOSED CONDUIT IN THE WET WELL SHALL NOT INTERFERE WITH PUMP REMOVAL AND REPLACEMENT.

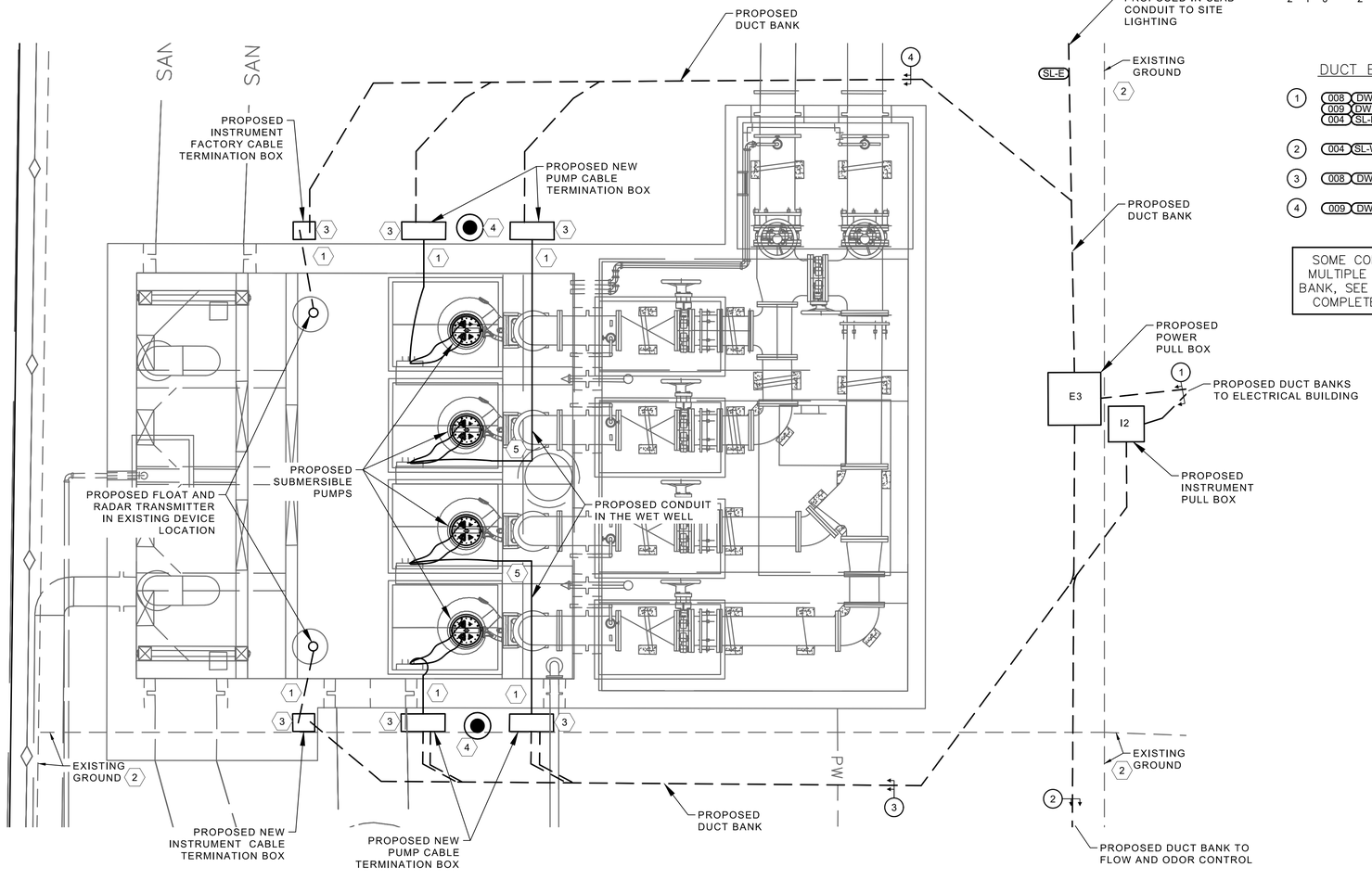

PROPOSED DRY WEATHER PUMP STATION ENLARGED

PLAN

1/4" = 1'-0"

1/4" = 1'- 0"

2 1 0 2 4

DUCT BANK CONDUITS

1. 008 DWP1-P DWP2-P DWP3-P DWP4-P; 009 DWP1-M DWP2-M DWP3-M DWP4-M; 004 SL-E SL-W H-OC-P
2. 004 SL-W H-OC-P
3. 008 DWP1-P DWP2-P DWP1-M DWP2-M
4. 009 DWP3-P DWP4-P DWP3-M DWP4-M

SOME CONDUIT TAGS REPRESENT MULTIPLE CONDUITS, IN THE DUCT BANK, SEE CONDUIT SCHEDULES FOR COMPLETE TAGGING INFORMATION

GENERAL ELECTRICAL NOTES:

A. THIS DRAWING ILLUSTRATES THE DRY WEATHER PUMP STATION; PROPOSED ELECTRICAL, INSTRUMENTATION AND CONTROL EQUIPMENT LOCATIONS. IT DESCRIBES EQUIPMENT, AND INSTRUMENTS TO BE PROVIDED IN THIS PROJECT. SEE DETAIL DRAWINGS, DIVISION 13 AND DIVISION 15 SPECIFICATIONS FOR ALL ASPECTS OF SUPPLY.

B. EXISTING CONCRETE EMBEDDED CONDUIT MAY BE USED FOR PROPOSED WORK.

C. CONTRACTOR HAS TASKS, IN THIS PROJECT, IN NEAR PROXIMITY TO CNP OVERHEAD POWER LINES. CONTRACTOR SHALL FOLLOW NEC AND CNP STANDARDS FOR SAFE WORKING DISTANCE, TEMPORARY SIGNAGE AND PROCEDURES.

D. SEE 6-E-11 FOR DRY WEATHER STATION ONE LINE DIAGRAM.

E. SEE DETAIL SHEETS FOR TERMINATION BOXES AND THE SUPPORT REQUIREMENTS.

F. GROUNDING SHALL BE RECONNECTED AND INSTALLED PER SPECIFICATIONS.

KGI Kalluri Group, Inc.
TBPE Registration No. F-665
16300 Katy Freeway, Suite 172
Houston, Texas 77094
Phone: (713)-365-9288
PROJECT 4285

QUIDDITY
Texas Board of Professional Engineers and Land Surveyors Reg. No. F-23290
6330 West Loop South, Suite 150 • Bellaire, TX 77401 • 713.777.5337

JOB NO: 00050-0099-01 DATE: 5/7/2026

APPROVED BY: RK

DATE: 05/2026

DESIGNED BY: SLJ

DRAWN BY: RHW

SURVEYED BY: WESTERN GROUP CONSULTANTS
FB NO. P-6414

STATE OF TEXAS
STACY L. JORDAN
148233
LICENSED
PROFESSIONAL ENGINEER
06.12.2026

CITY OF HOUSTON
HOUSTON PUBLIC WORKS

SCOTT STREET NO. 1 LIFT STATION REHABILITATION
ELECTRICAL
DRY WEATHER PUMP STATION ENLARGED PLAN - PROPOSED

WBS NUMBER	FOR CITY OF HOUSTON USE ONLY
R-000267-127A-4	
DRAWING SCALE	
AS NOTED	
CITY OF HOUSTON PM	
TAHA LOTIA	
DWG NO. 1-E-01	
SHEET NO. 144 OF 220	

D:\Kalluri Group, Inc\KGI - Documents\4285-QEL (Scott Street LS)\Drawings\Electrical\0-E-04 -10 -11 Electrical Site Plans.dwg

NO.	DATE	REVISIONS	APP.

3/16" = 1'- 0"
4 0 4 8

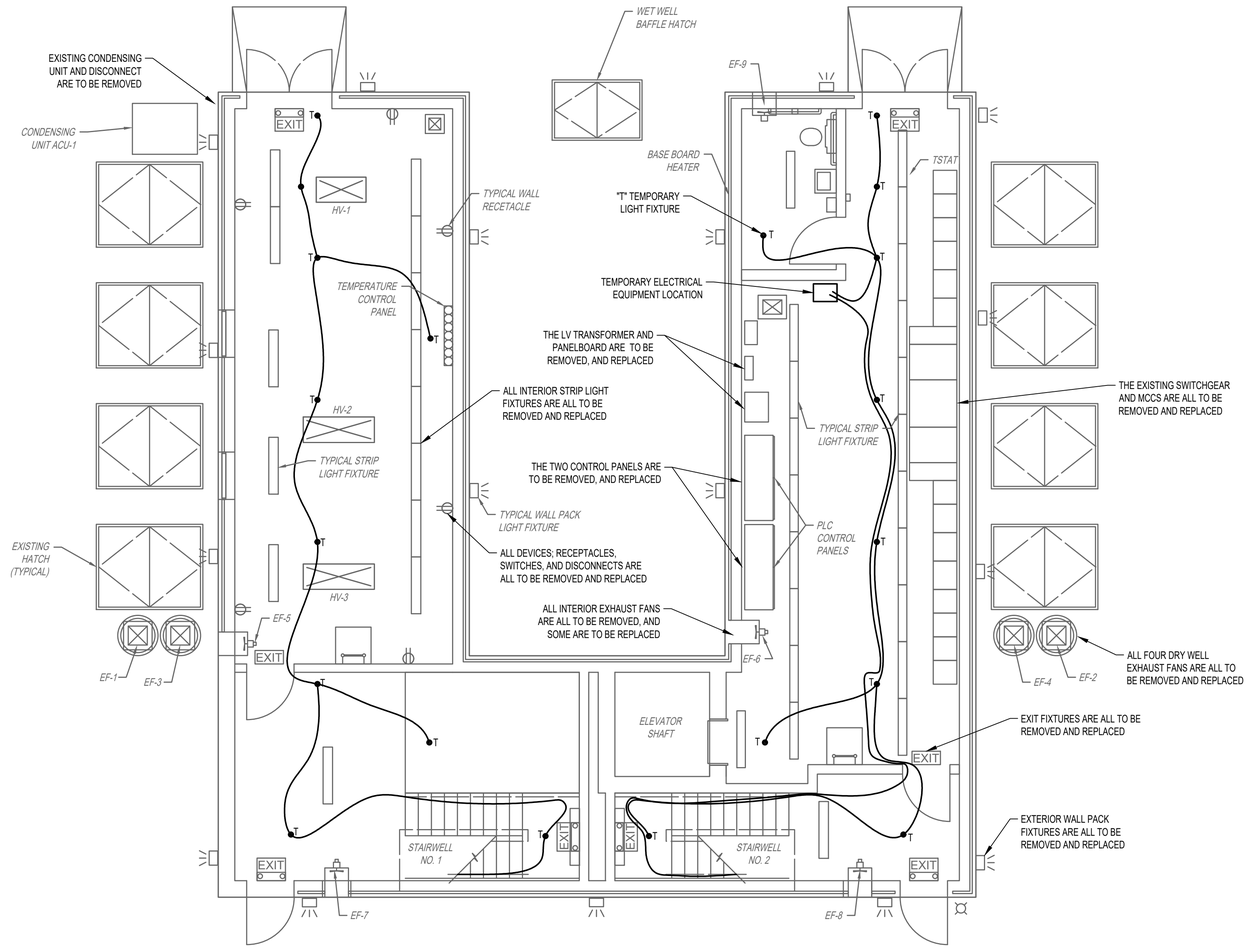

EXISTING WET WEATHER PUMP STATION GROUND LEVEL

PLAN

3/16" = 1'-0"

GENERAL NOTES:

A. THIS DRAWING IS PROVIDED TO ILLUSTRATE THE WET WEATHER PUMP STATION GROUND FLOOR ELECTRICAL REMOVALS AND DESCRIBE THE TASKS.

B. PERFORM AS FOUND CONDITION ASSESSMENT AND PROVIDE TEMPORARY PLAN. UPON INSTALLATION OF TEMPORARY FACILITIES REMOVALS MAY BEGIN.

C. THE WET WEATHER PUMP STATION IS TO HAVE ALL ELECTRICAL DEVICES, LIGHTING, CONTROL PANELS, PANELBOARDS, MCC, AND SWITCHGEAR REMOVED.

D. ALL CONDUCTORS SHALL BE REMOVED, NO EXISTING LIGHTING OR RECEPTACLES MAY BE ENERGIZED WITH TEMPORARY POWER.

E. DRY WELL SUMP PUMPS SHALL BE PROVIDED TEMPORARY POWER AT ALL TIMES, DURATION OF THE PROJECT.

F. FOR CLARITY NOT ALL ITEMS REQUIRING REMOVAL AND REPLACEMENT ARE ILLUSTRATED HERE. IT IS A COMPLETE REMOVAL AND REPLACEMENT.

G. COORDINATE A SCADA WORKSHOP PRIOR TO START OF REMOVALS TO SCHEDULE SCADA CONNECTION TRANSITIONS.

KGI Kalluri Group, Inc.
TBPE Registration No. F-665
16300 Katy Freeway, Suite 172
Houston, Texas 77094
Phone: (713)-365-9288
PROJECT 4285

QUIDDITY
Texas Board of Professional Engineers and Land Surveyors Reg. No. F-23290
6330 West Loop South, Suite 150 • Bellaire, TX 77401 • 713.777.5337

JOB NO: 00050-0099-01 DATE: 5/7/2026

APPROVED BY: RK

DATE: 05/2026

DESIGNED BY: SLJ

DRAWN BY: RHW

SURVEYED BY: WESTERN GROUP CONSULTANTS
FB NO. P-6414

STATE OF TEXAS
STACY L. JORDAN
148233
LICENSED PROFESSIONAL ENGINEER
05.12.2026

CITY OF HOUSTON
HOUSTON PUBLIC WORKS

SCOTT STREET NO. 1 LIFT STATION REHABILITATION
ELECTRICAL
WET WEATHER PUMP STATION GROUND LEVEL PLAN - EXISTING

WBS NUMBER	FOR CITY OF HOUSTON USE ONLY
R-000267-127A-4	
DRAWING SCALE	
AS NOTED	
CITY OF HOUSTON PM	
TAHA LOTIA	
DWG NO. 2-E-01	
SHEET NO. 145 OF 220	

F:\Users\KGI-StacyJordan\Kalluri Group, Inc\KGI - Documents\4285-QEL (Scott Street LS)\Drawings\Electrical\2-E-01 - 05 Wet Weather Pump Station Interior - All Existing.dwg

ORIGINAL SCALE IN INCHES FOR REDUCED PLANS

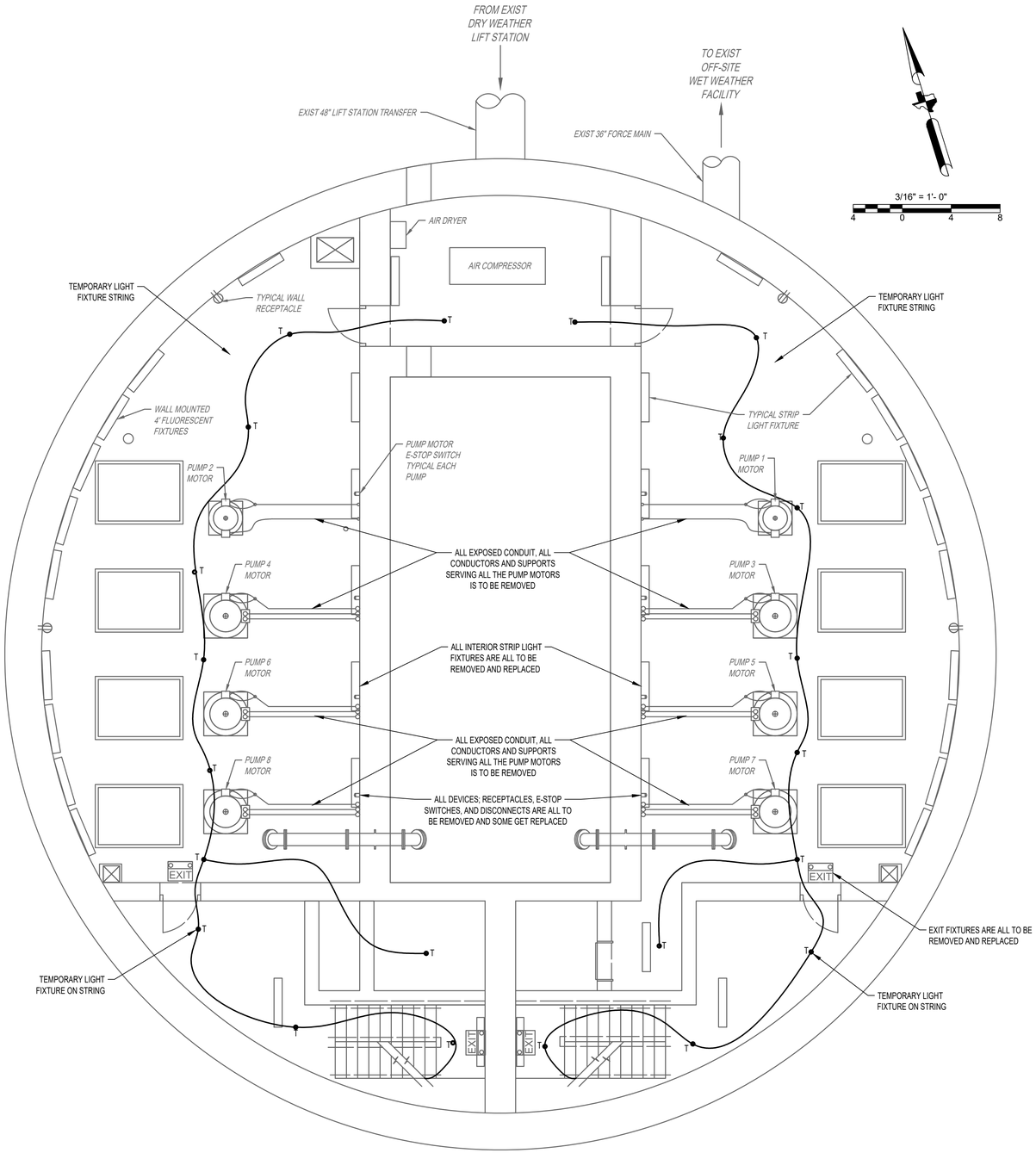

EXISTING WET WEATHER PUMP STATION MOTOR LEVEL

PLAN

3/16" = 1'-0"

NO.	DATE	REVISIONS	APP.

GENERAL NOTES:

A. THIS DRAWING IS PROVIDED TO ILLUSTRATE THE WET WEATHER PUMP STATION MOTOR LEVEL ELECTRICAL REMOVALS AND DESCRIBE THE TASKS.

B. PERFORM AS FOUND CONDITION ASSESSMENT AND INCLUDE MOTOR LEVEL WORK IN THE TEMPORARY PLAN. UPON INSTALLATION OF TEMPORARY FACILITIES REMOVALS MAY BEGIN. THE TEMPORARY LIGHTING SHOWN IS THE MINIMUM NUMBER OF FIXTURES TO BE PROVIDED. COORDINATE TO PROVIDE LIGHT FOR ALL PROCESS MECHANICAL TASKS.

C. THE WET WEATHER PUMP STATION MOTOR LEVEL IS TO HAVE ALL ELECTRICAL DEVICES, LIGHTING, AND CONTROL PANELS REMOVED.

D. ALL EXPOSED CONDUIT AND ALL CONDUCTORS SHALL BE REMOVED, NO EXISTING LIGHTING OR RECEPTACLES MAY BE ENERGIZED WITH TEMPORARY POWER.

E. DRY WELL SUMP PUMPS SHALL BE PROVIDED TEMPORARY POWER ON THIS LEVEL, NOT THE LOWER PUMP LEVEL, AT ALL TIMES, FOR DURATION OF THE PROJECT.

F. FOR CLARITY NOT ALL ITEMS REQUIRING REMOVAL AND REPLACEMENT ARE ILLUSTRATED HERE. IT IS A COMPLETE REMOVAL AND REPLACEMENT.

G. COORDINATE WITH OTHER TRADES PRIOR TO START OF REMOVALS TO SCHEDULE DISCONNECTIONS.

KGI Kalluri Group, Inc.
TBPE Registration No. F-665
16300 Katy Freeway, Suite 172
Houston, Texas 77094
Phone: (713)-365-9288
PROJECT 4285

QUIDDITY
Texas Board of Professional Engineers and Land Surveyors Reg. No. F-23290
6330 West Loop South, Suite 150 • Bellaire, TX 77401 • 713.777.5337

JOB NO: 00050-0099-01 DATE: 5/7/2026

APPROVED BY: RK

DATE: 05/2026

DESIGNED BY: SLJ

DRAWN BY: RHW

SURVEYED BY: WESTERN GROUP CONSULTANTS
FB NO. P-6414

STATE OF TEXAS
STACY L. JORDAN
148233
LICENSED
PROFESSIONAL ENGINEER
06.12.2026

CITY OF HOUSTON
HOUSTON PUBLIC WORKS

SCOTT STREET NO. 1 LIFT STATION REHABILITATION

ELECTRICAL

WET WEATHER PUMP STATION MOTOR LEVEL PLAN - EXISTING

WBS NUMBER	FOR CITY OF HOUSTON USE ONLY
R-000267-127A-4	
DRAWING SCALE	
AS NOTED	
CITY OF HOUSTON PM	
TAHA LOTIA	
DWG NO. 2-E-02	
SHEET NO. 146 OF 220	

F:\Users\KGI-StacyJordan\Kalluri Group, Inc\KGI - Documents\4285-QEL (Scott Street LS)\Drawings\Electrical\2-E-01 - 05 Wet Weather Pump Station Interior - All Existing.dwg

ORIGINAL SCALE IN INCHES FOR REDUCED PLANS

NO.	DATE	REVISIONS	APP.

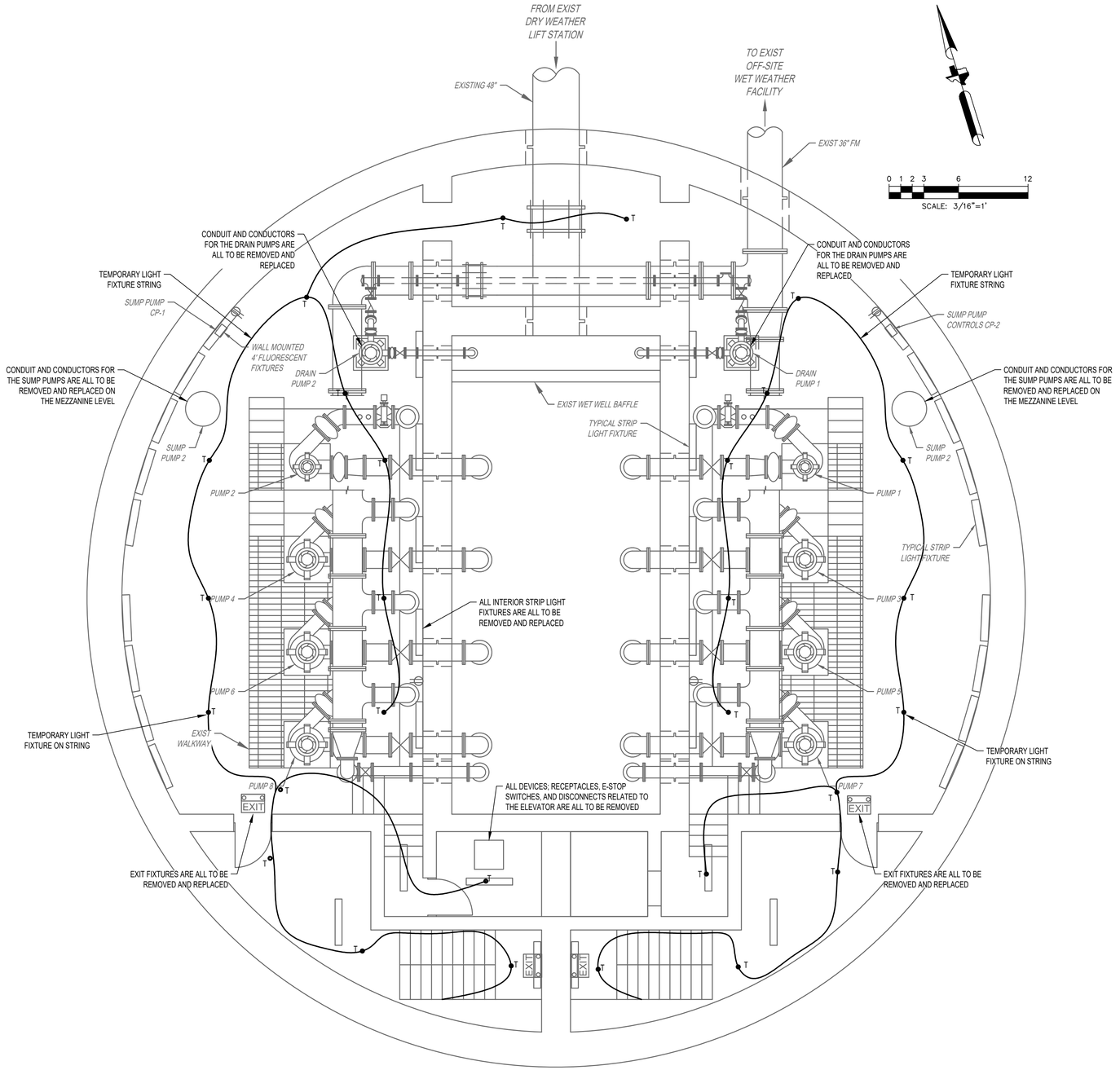

EXISTING WET WEATHER PUMP STATION PUMP LEVEL

PLAN

3/16" = 1'-0"

GENERAL NOTES:

A. THIS DRAWING IS PROVIDED TO ILLUSTRATE THE WET WEATHER PUMP STATION PUMP LEVEL ELECTRICAL REMOVALS AND DESCRIBE THE TASKS.

B. PERFORM AS FOUND CONDITION ASSESSMENT AND INCLUDE PUMP LEVEL WORK IN THE TEMPORARY PLAN. UPON INSTALLATION OF TEMPORARY FACILITIES REMOVALS MAY BEGIN. THE TEMPORARY LIGHTING SHOWN IS THE MINIMUM NUMBER OF FIXTURES TO BE PROVIDED. COORDINATE TO PROVIDE LIGHT FOR ALL PROCESS MECHANICAL TASKS.

C. THE WET WEATHER PUMP STATION PUMP LEVEL IS TO HAVE ALL ELECTRICAL DEVICES, LIGHTING, AND CONTROL PANELS REMOVED.

D. ALL EXPOSED CONDUIT AND ALL CONDUCTORS SHALL BE REMOVED, NO EXISTING LIGHTING OR RECEPTACLES MAY BE ENERGIZED WITH TEMPORARY POWER.

E. DRY WELL SUMP PUMPS SHALL BE PROVIDED TEMPORARY POWER ON THIS LEVEL, NOT THE LOWER PUMP LEVEL, AT ALL TIMES, FOR DURATION OF THE PROJECT.

F. THE WET WELL DRAIN PUMPS ARE NOT INCLUDED IN THIS PROJECT FOR REPLACEMENT. EXISTING CONDUIT AND CONDUCTORS WILL BE REMOVED AND REPLACED.

G. FOR CLARITY NOT ALL ITEMS REQUIRING REMOVAL AND REPLACEMENT ARE ILLUSTRATED HERE. IT IS A COMPLETE REMOVAL AND REPLACEMENT.

H. COORDINATE WITH OTHER TRADES PRIOR TO START OF REMOVALS TO SCHEDULE DISCONNECTIONS.

KGI Kalluri Group, Inc.
TBPE Registration No. F-665
16300 Katy Freeway, Suite 172
Houston, Texas 77094
Phone: (713)-365-9288
PROJECT 4285

QUIDDITY
Texas Board of Professional Engineers and Land Surveyors Reg. No. F-23290
6330 West Loop South, Suite 150 • Bellaire, TX 77401 • 713.777.5337

JOB NO: 00050-0099-01 DATE: 5/7/2026

APPROVED BY: RK

DATE: 05/2026

DESIGNED BY: SLJ

DRAWN BY: RHW

SURVEYED BY: WESTERN GROUP CONSULTANTS
FB NO. P-6414

STATE OF TEXAS
STACY L. JORDAN
148233
LICENSED PROFESSIONAL ENGINEER
05.12.2026

CITY OF HOUSTON
HOUSTON PUBLIC WORKS

SCOTT STREET NO. 1 LIFT STATION REHABILITATION
ELECTRICAL
WET WEATHER PUMP STATION PUMP LEVEL PLAN - EXISTING

WBS NUMBER	FOR CITY OF HOUSTON USE ONLY
R-000267-127A-4	
DRAWING SCALE	
AS NOTED	
CITY OF HOUSTON PM	
TAHA LOTIA	
DWG NO. 2-E-03	
SHEET NO. 147 OF 220	

F:\Users\KGI-StacyJordan\Kalluri Group, Inc\KGI - Documents\4285-QEL (Scott Street LS)\Drawings\Electrical\2-E-01 - 05 Wet Weather Pump Station Interior - All Existing.dwg

0 1 2 3 4 5

ORIGINAL SCALE IN INCHES FOR REDUCED PLANS

NO.	DATE	REVISIONS	APP.

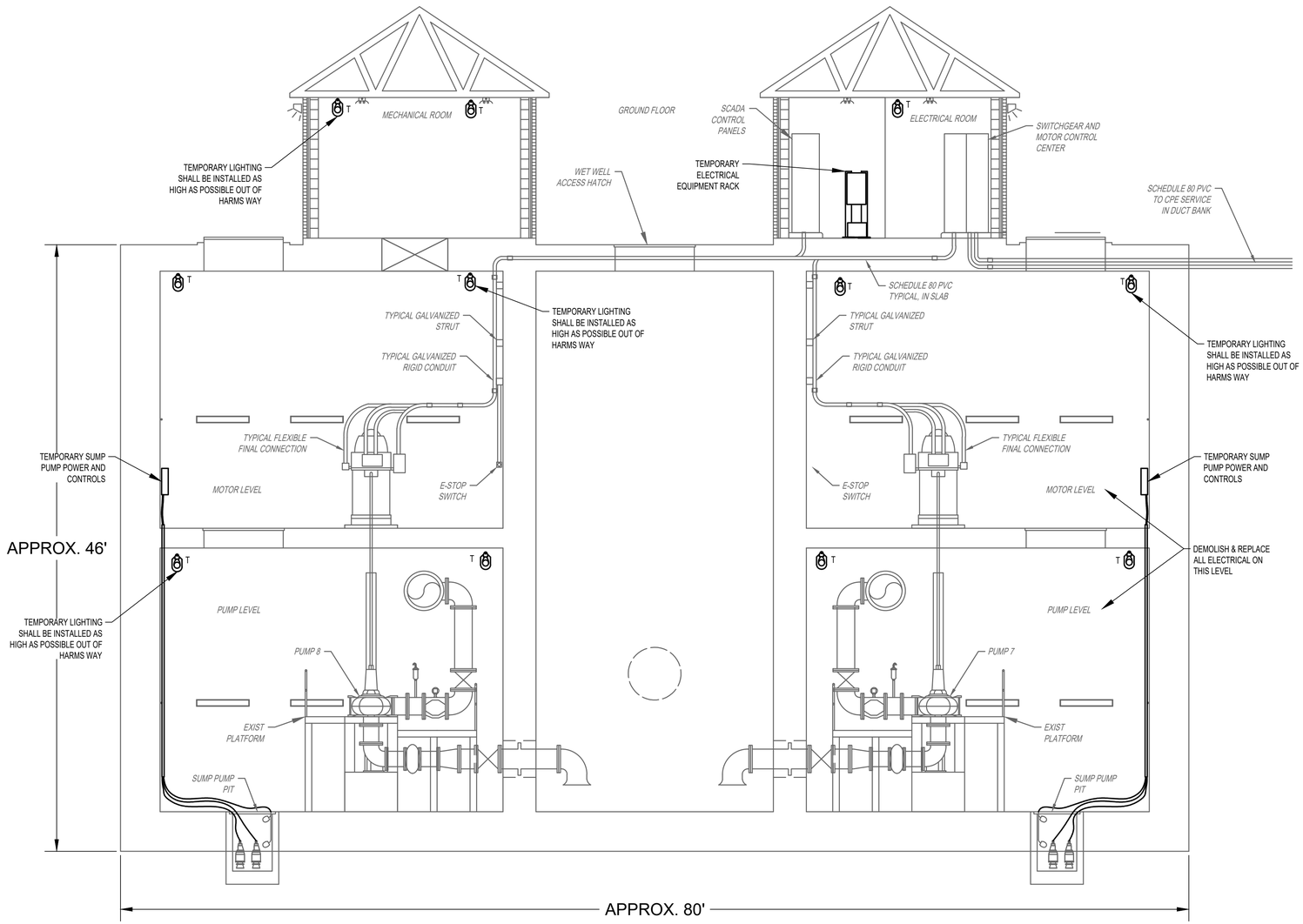

EXISTING WET WEATHER PUMP STATION

SECTION

1" = 5'-0"

GENERAL NOTES:

A. THIS DRAWING IS PROVIDED TO ILLUSTRATE EXISTING ELEVATIONS OF THE WET WEATHER PUMP STATION, ELECTRICAL REMOVALS, AND TEMPORARY INSTALLATIONS. TEMPORARY LIGHTING LOCATIONS ARE TO INDICATE THAT FIXTURES ARE INTENDED TO BE BELOW OBSTACLES.

B. PERFORM AS FOUND ASSESSMENT OF CONCRETE ENCASED CONDUIT ROUTINGS, TO FACILITATE PROPOSED ELECTRICAL INSTALLATIONS, EMBEDDED CONDUIT MAY BE UTILIZED WITH RFI ACCEPTANCE. FIND ROUTES BETWEEN FLOORS, PANELS AND EQUIPMENT, TO SAVE CORING NEW HOLES. PROVIDE TEMPORARY FACILITIES PRIOR TO ANY CONDUCTOR REMOVALS.

C. ALL PUMP SYSTEMS CONDUIT AND CONDUCTORS SHALL BE REMOVED, NO EXISTING LIGHTING OR RECEPTACLES MAY BE ENERGIZED WITH TEMPORARY POWER.

D. DRY WELL SUMP PUMPS SHALL BE PROVIDED TEMPORARY POWER AT ALL TIMES, DURATION OF THE PROJECT.

E. FOR CLARITY NOT ALL ITEMS REQUIRING REMOVAL AND REPLACEMENT ARE ILLUSTRATED HERE. IT IS A COMPLETE CONDUCTOR REMOVAL AND REPLACEMENT PROJECT.

F. COORDINATE A SCADA WORKSHOP PRIOR TO START OF REMOVALS TO SCHEDULE SCADA CONNECTION TRANSITIONS.

KGI Kalluri Group, Inc.

TBPE Registration No. F-665
16300 Katy Freeway, Suite 172
Houston, Texas 77094
Phone: (713)-365-9288
PROJECT 4285

QUIDDITY
Texas Board of Professional Engineers and Land Surveyors Reg. No. F-23290
6330 West Loop South, Suite 150 • Bellaire, TX 77401 • 713.777.5337

JOB NO: 00050-0099-01 DATE: 5/7/2026

APPROVED BY: RK	
DATE: 05/2026	
DESIGNED BY: SLJ	
DRAWN BY: RHW	
SURVEYED BY: WESTERN GROUP CONSULTANTS FB NO. P-6414	

STATE OF TEXAS
STACY L. JORDAN
148233
LICENSED
PROFESSIONAL ENGINEER
05.12.2026

CITY OF HOUSTON
HOUSTON PUBLIC WORKS

SCOTT STREET NO. 1 LIFT STATION REHABILITATION

ELECTRICAL

WET WEATHER PUMP STATION SECTION - EXISTING

WBS NUMBER	FOR CITY OF HOUSTON USE ONLY
R-000267-127A-4	
DRAWING SCALE	
AS NOTED	
CITY OF HOUSTON PM	
TAHA LOTIA	
DWG NO. 2-E-04	
SHEET NO. 148 OF 220	

F:\Users\KGI-StacyJordan\Kalluri Group, Inc\KGI - Documents\4285-QEL (Scott Street LS)\Drawings\Electrical\2-E-01 - 05 Wet Weather Pump Station Interior - All Existing.dwg

0 1 2 3 4 5 ORIGINAL SCALE IN INCHES FOR REDUCED PLANS

NO.	DATE	REVISIONS	APP.

3/16" = 1'- 0"

4 0 4 8

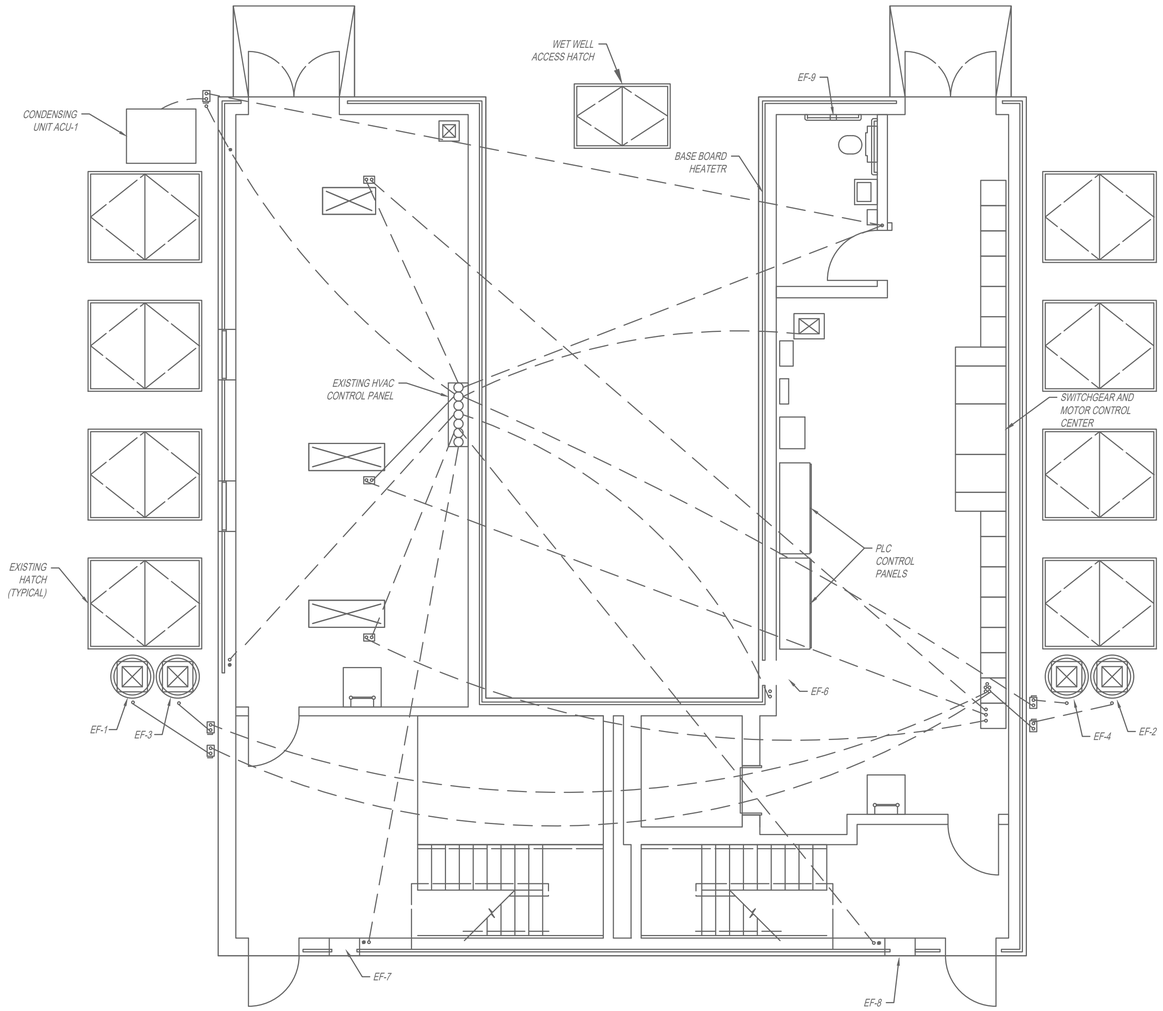

EXISTING WET WEATHER PUMP STATION GROUND LEVEL HVAC CONDUIT

PLAN

1" = 5'-0"

GENERAL NOTES:

A. THIS DRAWING IS PROVIDED TO ILLUSTRATE THE WET WEATHER PUMP STATION GROUND FLOOR IN-SLAB HVAC CONDUITS FROM RECORD DRAWINGS.

B. CONTRACTOR SHALL REMOVE ALL EXISTING EXPOSED CONDUIT AND CONDUCTORS RELATED TO HVAC SYSTEMS. ALL NEW CONDUIT AND CONDUCTORS SHALL BE PROVIDED FOR HVAC SYSTEMS.

C. EXISTING CONCRETE ENCASED CONDUIT MAY BE UTILIZED FOR HVAC SYSTEM CONDUCTORS. PRIOR TO USAGE OF EXISTING CONCRETE ENCASED PERFORM AN INSPECTION AND CLEANING.

D. PERFORM AS ROUTED ASSESSMENT AND DETERMINE IF EMBEDDED CONDUITS WILL BE CUT DURING NEW PENETRATIONS IN THE STRUCTURE.

E. FOR CLARITY NOT ALL ITEMS REQUIRING REMOVAL AND REPLACEMENT ARE ILLUSTRATED HERE. IT IS A COMPLETE REMOVAL AND REPLACEMENT.

F. COORDINATE WITH HVAC PRIOR TO START OF REMOVALS TO SCHEDULE SCADA CONNECTION TRANSITIONS.

KGI Kalluri Group, Inc.
TBPE Registration No. F-665
16300 Katy Freeway, Suite 172
Houston, Texas 77094
Phone: (713)-365-9288
PROJECT 4285

QUIDDITY
Texas Board of Professional Engineers and Land Surveyors Reg. No. F-23290
6330 West Loop South, Suite 150 • Bellaire, TX 77401 • 713.777.5337

JOB NO: 00050-0099-01 DATE: 5/7/2026

APPROVED BY: RK

DATE: 05/2026

DESIGNED BY: SLJ

DRAWN BY: RHW

SURVEYED BY: WESTERN GROUP CONSULTANTS
FB NO. P-6414

STATE OF TEXAS
STACY L. JORDAN
148233
LICENSED PROFESSIONAL ENGINEER
06.12.2026

CITY OF HOUSTON
HOUSTON PUBLIC WORKS

SCOTT STREET NO. 1 LIFT STATION REHABILITATION

ELECTRICAL

WET WEATHER PUMP STATION GROUND LEVEL HVAC CONDUIT PLAN - EXISTING

WBS NUMBER	FOR CITY OF HOUSTON USE ONLY
R-000267-127A-4	
DRAWING SCALE	
AS NOTED	
CITY OF HOUSTON PM	
TAHA LOTIA	
DWG NO. 2-E-05	
SHEET NO. 149 OF 220	

F:\Users\KGI-Stacy\Jordan\Kalluri Group, Inc\KGI - Documents\4285-QEL (Scott Street LS)\Drawings\Electrical\2-E-01 - 05 Wet Weather Pump Station Interior - All Existing.dwg

ORIGINAL SCALE IN INCHES FOR REDUCED PLANS

NO.	DATE	REVISIONS	APP.

3/16" = 1'- 0"

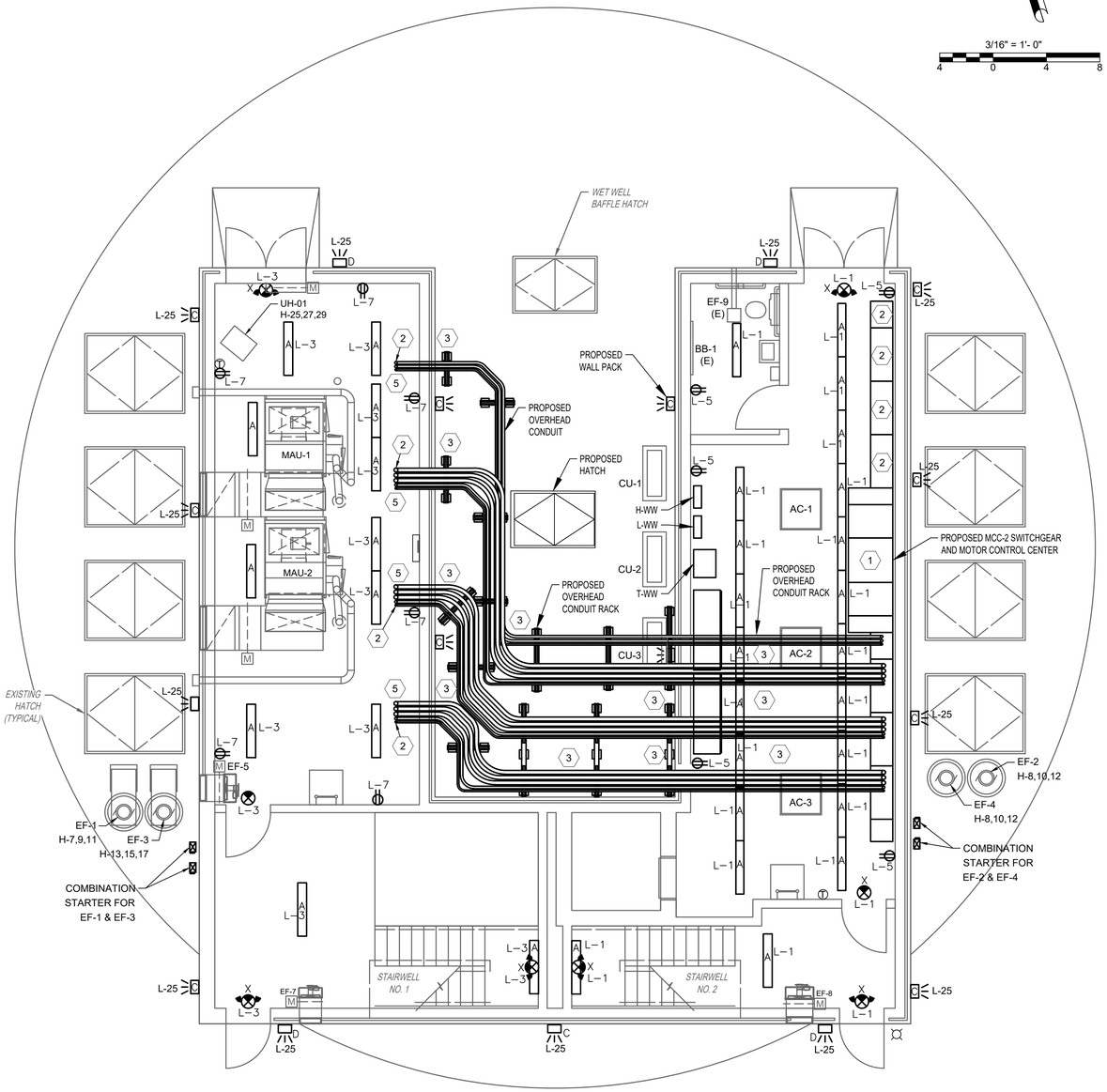

PROPOSED WET WEATHER PUMP STATION GROUND LEVEL

PLAN

3/16" = 1'-0"

KEYED NOTES:

1. PROPOSED MCC-2 SWITCHGEAR INCOMING CONDUCTOR SECTION SHALL BE LOCATED OVER EXISTING RISERS.
2. EXISTING PENETRATIONS MAY NOT BE USABLE WITH THE PROPOSED EQUIPMENT. CONTRACTOR SHALL COORDINATE TO CORE DRILL THE EXISTING CONCRETE GROUND LEVEL OF THE LIFT STATION STRUCTURE. SLAB PENETRATION METHODS SHALL BE COORDINATED WITH STRUCTURAL EOR, SUBMITTED AS A SHOP DRAWING, AND ACCEPTED PRIOR TO START OF WORK.
3. PROPOSED WEST DRY WELL PUMP CIRCUITS SHALL BE ROUTED THROUGH THE ELECTRICAL ROOM ON THE CEILING AND OUTDOORS ON OVERHEAD RACK SYSTEM, TO THE MECHANICAL ROOM. WALL PENETRATION METHODS SHALL BE COORDINATED WITH STRUCTURAL EOR, SUBMITTED AS A SHOP DRAWING, AND ACCEPTED PRIOR TO START OF WORK.
4. OVERHEAD CONDUIT SUPPORTS SHALL BE SUBMITTED AND ACCEPTED PRIOR TO FABRICATION. SUPPORTS SHALL BE BASED ON THE OVERHEAD CONDUIT SUPPORT, SEE DETAILS SHEET 4 FOR REQUIREMENTS. CONDUIT ROUTING WILL REQUIRE PLANNING TO KEEP THE PUMP FEEDERS ON THE SAME ELEVATION, ON TOP OF THE SUPPORTS.
5. THE ELECTRICAL CONDUIT CONCEPT AND LAYOUT SHOWN KEEPS CONDUIT OUT OF THE HVAC EQUIPMENT AND THE WORKING SPACES REQUIRED, FOR THE DESIGN EQUIPMENT.

GENERAL NOTES:

A. THIS DRAWING IS PROVIDED TO ILLUSTRATE THE WET WEATHER PUMP STATION GROUND FLOOR PROPOSED ELECTRICAL CONDITION, AND DESCRIBE TASKS.

B. PROVIDE A COMPLETE AND WORKING WET WEATHER LIFT STATION IN COMPLIANCE WITH THE, CURRENT AT THE TIME OF BID, GUIDELINES.

C. THE WET WEATHER PUMP STATION IS TO HAVE ALL ELECTRICAL DEVICES, LIGHTING, CONTROL PANELS, PANELBOARDS, MCC, AND SWITCHGEAR PROVIDED IN COMPLIANCE WITH THE RELATED SPECIFICATIONS AND APPROVED SHOP DRAWING SUBMITTALS.

D. ALL EXPOSED CONDUIT AND CONDUCTORS SHALL BE NEW. ALL LIGHTING, RECEPTACLES, AND EQUIPMENT SHALL BE CLEAN AND PROVIDED NAMEPLATES PER SPECIFICATIONS.

E. COORDINATE WITH OTHERS TO PROVIDE HVAC POWER AND LOW VOLTAGE CONDUIT AND CONDUCTORS, AS REQUIRED PER HVAC RISER DIAGRAM.

F. FOR CLARITY NOT ALL ITEMS REQUIRED ARE ILLUSTRATED HERE; SEE SITE PLANS, ONE LINE DIAGRAMS, SCHEDULES, AND DETAILS FOR COMPLETE REPLACEMENT REQUIREMENTS.

G. COORDINATE WITH SCADA GROUP THROUGH THE WORKSHOPS AND PRIOR TO START TO ENSURE ALL CURRENT SCADA DEVICES AND CONNECTIONS ARE PROVIDED.

KGI Kalluri Group, Inc.
TBPE Registration No. F-665
16300 Katy Freeway, Suite 172
Houston, Texas 77094
Phone: (713)-365-9288
PROJECT 4285

QUIDDITY
Texas Board of Professional Engineers and Land Surveyors Reg. No. F-23290
6330 West Loop South, Suite 150 • Bellaire, TX 77401 • 713.777.5337

JOB NO: 00050-0099-01 DATE: 5/7/2026

APPROVED BY: RK	
DATE: 05/2026	
DESIGNED BY: SLJ	
DRAWN BY: RHW	
SURVEYED BY: WESTERN GROUP CONSULTANTS FB NO. P-6414	STATE OF TEXAS · STACY L. JORDAN · 148233 · LICENSED PROFESSIONAL ENGINEER · 05.12.2026

CITY OF HOUSTON
HOUSTON PUBLIC WORKS

SCOTT STREET NO. 1 LIFT STATION REHABILITATION
ELECTRICAL
WET WEATHER PUMP STATION GROUND LEVEL PLAN - PROPOSED

WBS NUMBER	FOR CITY OF HOUSTON USE ONLY
R-000267-127A-4	
DRAWING SCALE	
AS NOTED	
CITY OF HOUSTON PM	
TAHA LOTIA	
DWG NO. 2-E-11	
SHEET NO. 150 OF 220	

F:\Users\KGI-StacyJordan\Kalluri Group, Inc\KGI - Documents\4285-QEL (Scott Street LS)\Drawings\Electrical\2-E-11 - 15 Wet Weather Pump Station Interior - All Proposed.dwg

ORIGINAL SCALE IN INCHES FOR REDUCED PLANS

NO.	DATE	REVISIONS	APP.

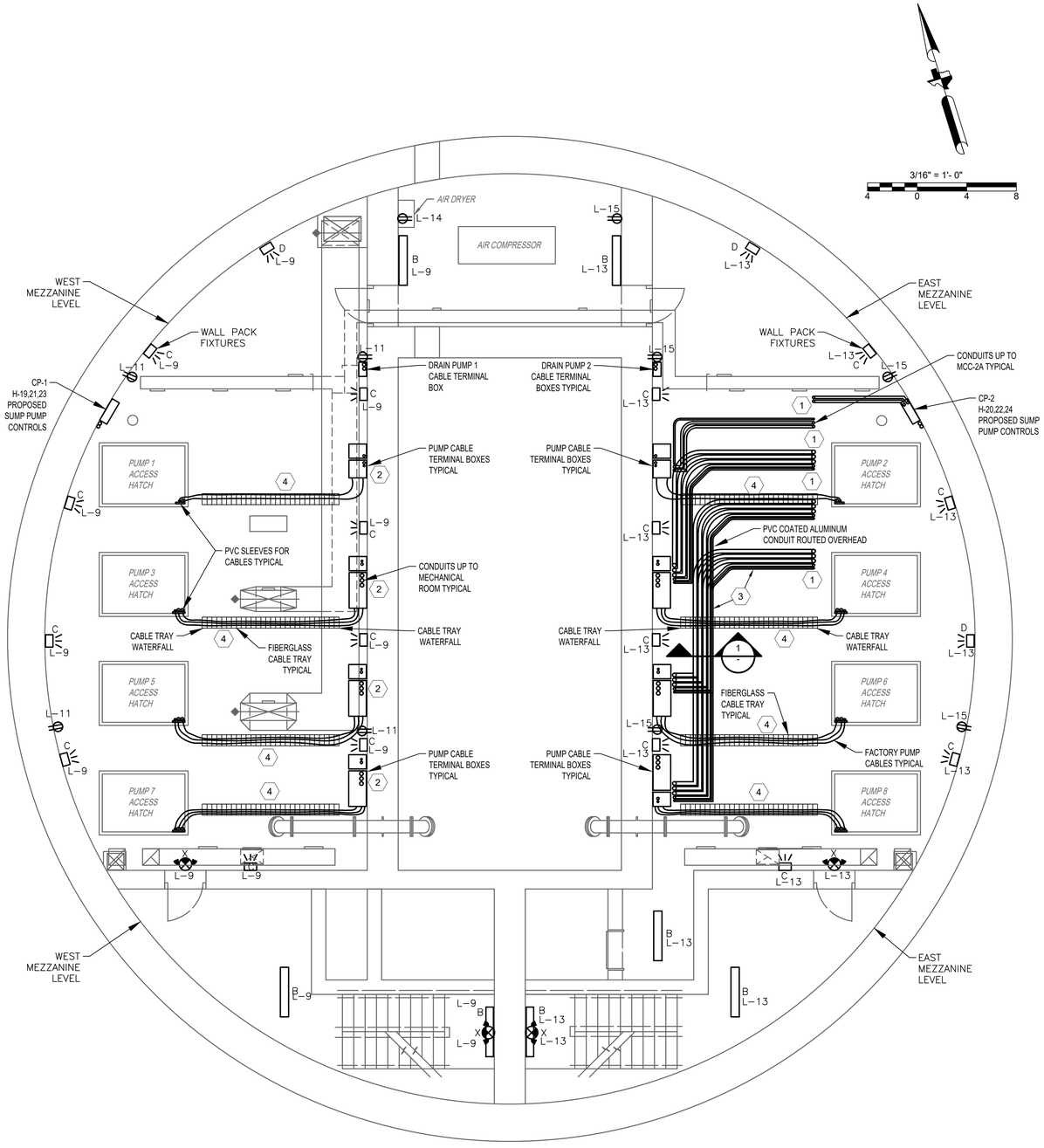

PROPOSED WET WEATHER PUMP STATION MEZZANINE LEVEL

PLAN

3/16" = 1'-0"

KEYED NOTES:

1. EAST DRY WELL WET WEATHER PUMPS 2, 4, 6, 8, DRAIN PUMP AND SUMP PUMPS ARE FED OUT THE BOTTOM OF PROPOSED MCC-2 TO TERMINATION BOXES AND CONTROLLERS. EXISTING PENETRATIONS MAY NOT BE USABLE WITH THE PROPOSED EQUIPMENT. CONTRACTOR SHALL COORDINATE TO CORE DRILL THE EXISTING CONCRETE GROUND LEVEL OF THE LIFT STATION STRUCTURE. SLAB PENETRATION METHODS SHALL BE COORDINATED WITH STRUCTURAL EOR, SUBMITTED AS A SHOP DRAWING, AND ACCEPTED PRIOR TO START OF WORK.
2. PROPOSED WEST DRY WELL PUMP CIRCUITS SHALL BE ROUTED THROUGH THE GROUND LEVEL MECHANICAL ROOM AND DOWN TO THE WEST MAZZANINE LEVEL.
3. TRAPEZE TYPE CONDUIT SUPPORTS SHALL BE COORDINATED WITH HVAC AND OVERHEAD CRANE STRUCTURAL ELEMENTS PRIOR TO START OF INSTALLATION. TRAPEZE SUPPORTS SHALL BE BASED ON THE DETAILS ON THIS SHEET.
4. COORDINATE TO SUPPORT FACTORY MOTOR CABLES ON FIBERGLASS CABLE TRAY SYSTEM. ROUTE FIBERGLASS TRAY ON TYPICAL VERTICAL SUPPORT AT A COORDINATED ELEVATION FOR CONVENIENCE OF MAINTENANCE AND PUMP REMOVALS.

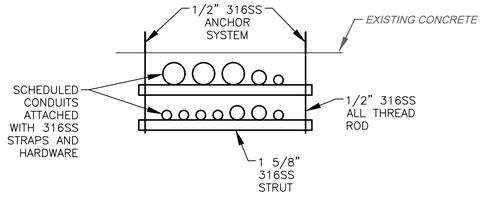

CONDUIT RACK

DETAIL 1 / -

NTS

GENERAL NOTES:

A. THIS DRAWING IS PROVIDED TO ILLUSTRATE THE WET WEATHER PUMP STATION MEZZANINE LEVEL PROPOSED ELECTRICAL CONDITION, AND DESCRIBE TASKS.

B. PROVIDE A COMPLETE AND WORKING WET WEATHER LIFT STATION IN COMPLIANCE WITH THE, CURRENT GUIDELINES AT THE TIME OF BID, GUIDELINES.

C. THE WET WEATHER PUMP STATION IS TO HAVE ALL ELECTRICAL DEVICES, LIGHTING, CONTROL PANELS, PANELBOARDS, MCC, AND SWITCHGEAR PROVIDED IN COMPLIANCE WITH THE RELATED SPECIFICATIONS AND APPROVED SHOP DRAWING SUBMITTALS.

D. ALL EXPOSED CONDUIT, CONDUCTORS, DEVICES, AND PLATES SHALL BE NEW. ALL LIGHT FIXTURES, AND EQUIPMENT SHALL BE CLEAN AND PROVIDED NAMEPLATES PER SPECIFICATIONS PRIOR TO ACCEPTANCE.

E. COORDINATE WITH OTHERS TO PROVIDE HVAC POWER AND LOW VOLTAGE CONDUIT AND CONDUCTORS, AS REQUIRED PER HVAC RISER DIAGRAM.

F. FOR CLARITY NOT ALL ITEMS REQUIRED ARE ILLUSTRATED HERE; SEE SITE PLANS, ONE LINE DIAGRAMS, SCHEDULES, AND DETAILS FOR COMPLETE REPLACEMENT REQUIREMENTS.

G. COORDINATE WITH SCADA GROUP THROUGH THE WORKSHOPS AND PRIOR TO START TO ENSURE ALL CURRENT SCADA DEVICES AND CONNECTIONS ARE PROVIDED.

KGI Kalluri Group, Inc.
TBPE Registration No. F-665
16300 Katy Freeway, Suite 172
Houston, Texas 77094
Phone: (713)-365-9288
PROJECT 4285

QUIDDITY
Texas Board of Professional Engineers and Land Surveyors Reg. No. F-23290
6330 West Loop South, Suite 150 • Bellaire, TX 77401 • 713.777.5337

JOB NO: 00050-0099-01 DATE: 5/7/2026

APPROVED BY: RK

DATE: 05/2026

DESIGNED BY: SLJ

DRAWN BY: RHW

SURVEYED BY: WESTERN GROUP CONSULTANTS
FB NO. P-6414

STATE OF TEXAS
STACY L. JORDAN
148233
LICENSED PROFESSIONAL ENGINEER
06.12.2026

CITY OF HOUSTON
HOUSTON PUBLIC WORKS

SCOTT STREET NO. 1 LIFT STATION REHABILITATION

ELECTRICAL

WET WEATHER PUMP STATION MEZZANINE LEVEL PLAN - PROPOSED

WBS NUMBER	FOR CITY OF HOUSTON USE ONLY
R-000267-127A-4	
DRAWING SCALE	
AS NOTED	
CITY OF HOUSTON PM	
TAHA LOTIA	
DWG NO. 2-E-12	
SHEET NO. 151 OF 220	

F:\Users\KGI-StacyJordan\Kalluri Group, Inc\KGI - Documents\4285-QEL (Scott Street LS)\Drawings\Electrical\2-E-11 - 15 Wet Weather Pump Station Interior - All Proposed.dwg

ORIGINAL SCALE IN INCHES FOR REDUCED PLANS

NO.	DATE	REVISIONS	APP.

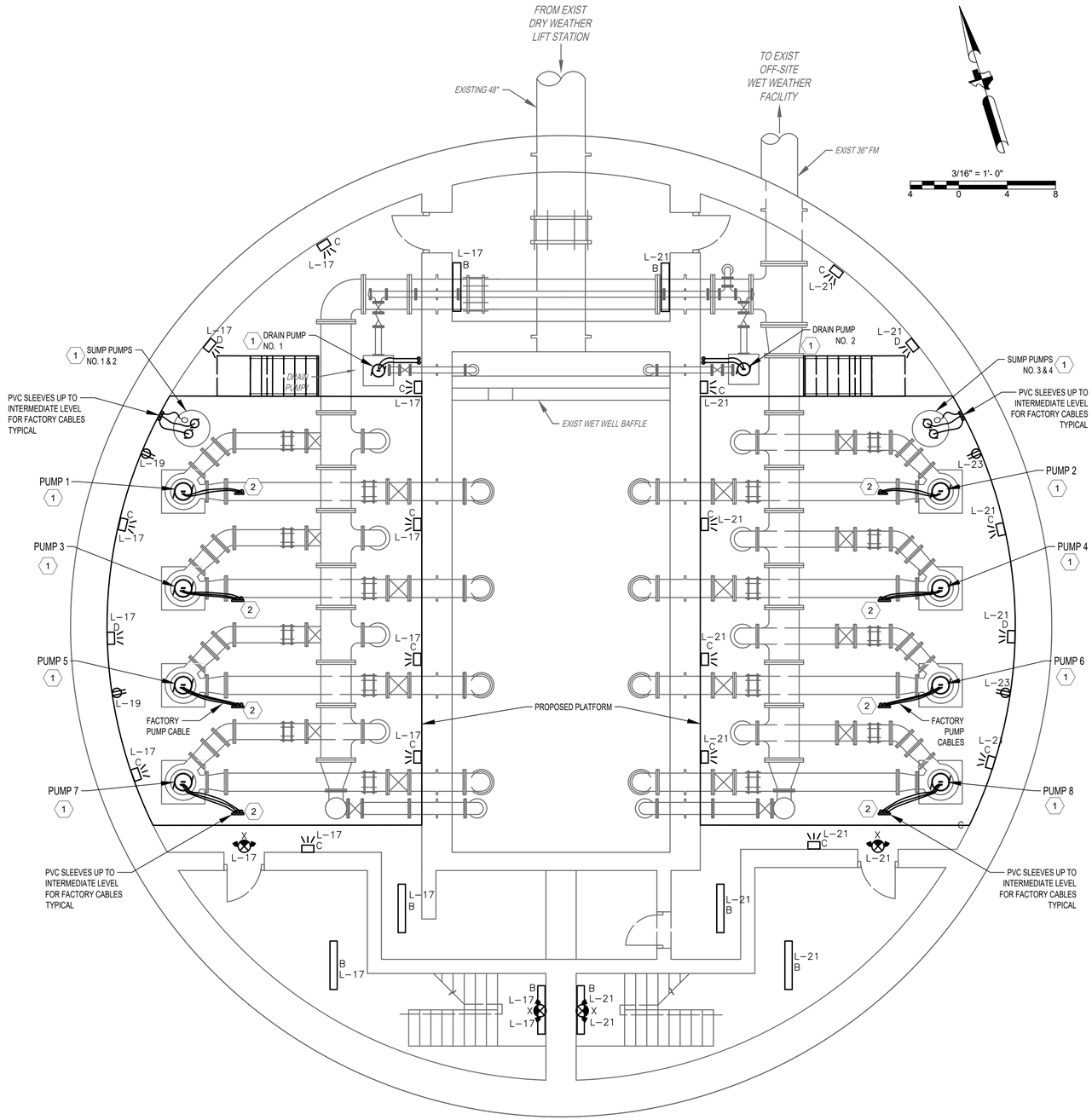

PROPOSED WET WEATHER PUMP STATION LOWER LEVEL

PLAN

3/16" = 1'-0"

EXISTING TEXT

1

KEYED NOTES:

1. DRY WELL WET WEATHER PUMPS, DRAIN PUMP AND SUMP PUMPS CIRCUITS ARE DESCRIBED AT THE TERMINATION BOXES AND CONTROLLERS ON THE MZANINE LEVEL DRAWING.
2. FACTORY PUMP CABLES SHALL BE ROUTED THROUGH THE MEZZANINE FLOOR CONCRETE IN CONDUIT NIPPLES AT THE OPENING. CONDUIT SUPPORTS SHALL BE COORDINATED WITH STRUCTURAL ELEMENTS PRIOR TO START OF INSTALLATION.

GENERAL NOTES:

A. THIS DRAWING IS PROVIDED TO ILLUSTRATE THE WET WEATHER PUMP STATION LOWER LEVEL PROPOSED ELECTRICAL CONDITION, AND DESCRIBE TASKS.

B. PROVIDE A COMPLETE AND WORKING WET WEATHER LIFT STATION IN COMPLIANCE WITH THE, CURRENT AT THE TIME OF BID, GUIDELINES.

C. THE WET WEATHER PUMP STATION LOWER LEVEL IS TO HAVE ALL ELECTRICAL DEVICES, LIGHTING, CONDUIT AND CONDUCTORS PROVIDED IN COMPLIANCE WITH THE RELATED SPECIFICATIONS AND APPROVED SHOP DRAWING SUBMITTALS.

D. ALL EXPOSED CONDUIT AND CONDUCTORS SHALL BE NEW. ALL LIGHTING, RECEPTACLES, AND EQUIPMENT SHALL BE CLEAN AND PROVIDED NAMEPLATES PER SPECIFICATIONS AT TIME OF TESTING AND COMMISSIONING.

E. FOR CLARITY NOT ALL CONDUIT REQUIRED IS ILLUSTRATED HERE. EXISTING CONCRETE EMBEDDED CONDUIT MAY BE UTILIZED FOR PROPOSED WORK.

F. COORDINATE WITH SCADA GROUP THROUGH THE WORKSHOPS AND PRIOR TO START TO ENSURE ALL DEVICES AND CONNECTIONS ARE PROVIDED.

KGI Kalluri Group, Inc.
TBPE Registration No. F-665
16300 Katy Freeway, Suite 172
Houston, Texas 77094
Phone: (713)-365-9288
PROJECT 4285

QUIDDITY
Texas Board of Professional Engineers and Land Surveyors Reg. No. F-23290
6330 West Loop South, Suite 150 • Bellaire, TX 77401 • 713.777.5337

JOB NO: 00050-0099-01 DATE: 5/7/2026

APPROVED BY: RK

DATE: 05/2026

DESIGNED BY: SLJ

DRAWN BY: RHW

SURVEYED BY: WESTERN GROUP CONSULTANTS
FB NO. P-6414

STATE OF TEXAS
STACY L. JORDAN
148233
LICENSED PROFESSIONAL ENGINEER
06.12.2026

CITY OF HOUSTON
HOUSTON PUBLIC WORKS

SCOTT STREET NO. 1 LIFT STATION REHABILITATION

ELECTRICAL

WET WEATHER PUMP STATION LOWER LEVEL PLAN - PROPOSED

WBS NUMBER	FOR CITY OF HOUSTON USE ONLY
R-000267-127A-4	
DRAWING SCALE	
AS NOTED	
CITY OF HOUSTON PM	
TAHA LOTIA	
DWG NO. 2-E-13	
SHEET NO. 152 OF 220	

F:\Users\KGI-StacyJordan\Kalluri Group, Inc\KGI - Documents\4285-QEL (Scott Street LS)\Drawings\Electrical\2-E-11 - 15 Wet Weather Pump Station Interior - All Proposed.dwg

ORIGINAL SCALE IN INCHES FOR REDUCED PLANS

NO.	DATE	REVISIONS	APP.

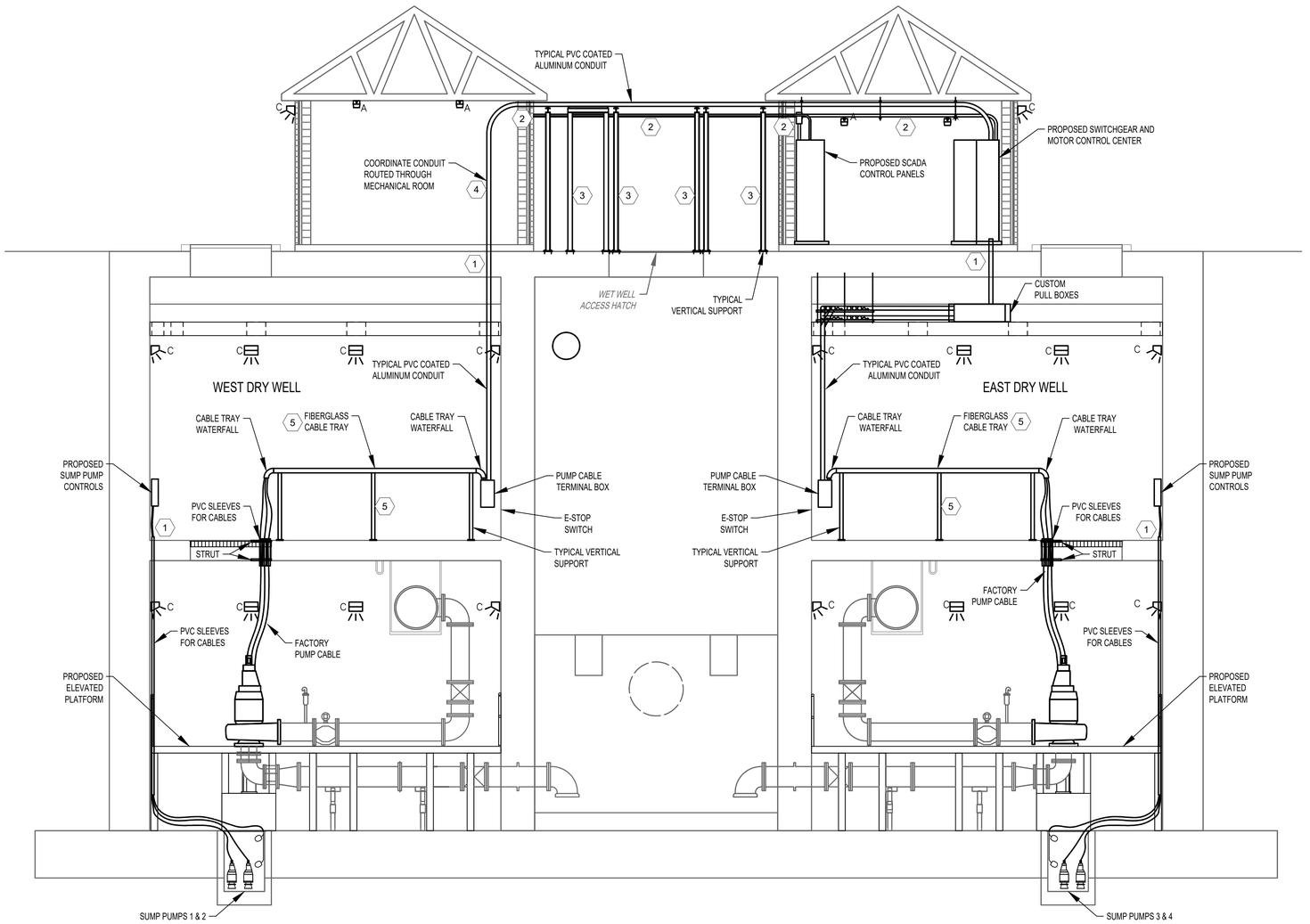

PROPOSED WET WEATHER PUMP STATION

SECTION

1" = 5'-0"

KEYED NOTES:

1. EXISTING PENETRATIONS MAY NOT BE USABLE WITH THE PROPOSED EQUIPMENT. CONTRACTOR SHALL COORDINATE TO CORE DRILL THE EXISTING CONCRETE GROUND LEVEL OF THE LIFT STATION STRUCTURE. SLAB PENETRATION METHODS SHALL BE COORDINATED WITH STRUCTURAL EOR, SUBMITTED AS A SHOP DRAWING, AND ACCEPTED PRIOR TO START OF WORK.
2. PROPOSED WEST DRY WELL PUMP CIRCUITS SHALL BE ROUTED THROUGH THE ELECTRICAL ROOM ON THE CEILING AND OUTDOORS ON OVERHEAD RACK SYSTEM, TO THE MECHANICAL ROOM. WALL PENETRATION AND REPAIR METHODS SHALL BE COORDINATED WITH STRUCTURAL EOR, SUBMITTED AS A SHOP DRAWING, AND ACCEPTED PRIOR TO START OF WORK.
3. OVERHEAD CONDUIT SUPPORTS SHALL BE SUBMITTED AND ACCEPTED PRIOR TO FABRICATION. SUPPORTS SHALL BE BASED ON THE OVERHEAD CONDUIT SUPPORT, SEE DETAILS SHEET 4 FOR REQUIREMENTS. CONDUIT ROUTING WILL REQUIRE PLANNING TO KEEP THE PUMP FEEDERS ON THE SAME ELEVATION, ON TOP OF THE SUPPORTS.
4. THE ELECTRICAL CONDUIT CONCEPT AND LAYOUT SHOWN KEEPS CONDUIT OUT OF THE HVAC EQUIPMENT AND THE WORKING SPACES REQUIRED, FOR THE DESIGN EQUIPMENT.
5. FACTORY CABLE SUPPORTS ELEVATION SHALL BE COORDINATED WITH WASTEWATER OPERATIONS AND SYSTEM SUBMITTED FOR ACCEPTANCE PRIOR TO FABRICATION.

GENERAL NOTES:

A. THIS DRAWING IS PROVIDED TO ILLUSTRATE ELEVATIONS OF THE WET WEATHER PUMP STATION, PROPOSED ELECTRICAL CONDITION, AND DESCRIBE TASKS.

B. PROVIDE A COMPLETE AND WORKING WET WEATHER LIFT STATION IN COMPLIANCE WITH THE, CURRENT AT THE TIME OF BID, GUIDELINES.

C. THE WET WEATHER PUMP STATION LOWER LEVEL IS TO HAVE ALL ELECTRICAL DEVICES, LIGHTING, CONDUIT AND CONDUCTORS PROVIDED IN COMPLIANCE WITH THE RELATED SPECIFICATIONS AND APPROVED SHOP DRAWING SUBMITTALS.

D. ALL EXPOSED CONDUIT AND CONDUCTORS SHALL BE NEW. ALL LIGHTING, RECEPTACLES, AND EQUIPMENT SHALL BE CLEAN AND PROVIDED NAMEPLATES PER SPECIFICATIONS AT TIME OF TESTING AND COMMISSIONING.

E. FOR CLARITY NOT ALL CONDUIT REQUIRED IS ILLUSTRATED HERE. EXISTING CONCRETE EMBEDDED CONDUIT MAY BE UTILIZED FOR PROPOSED WORK.

F. COORDINATE WITH SCADA GROUP THROUGH THE WORKSHOPS AND PRIOR TO START TO ENSURE ALL DEVICES AND CONNECTIONS ARE PROVIDED.

KGI Kalluri Group, Inc.
TBPE Registration No. F-665
16300 Katy Freeway, Suite 172
Houston, Texas 77094
Phone: (713)-365-9288
PROJECT 4285

QUIDDITY
Texas Board of Professional Engineers and Land Surveyors Reg. No. F-23290
6330 West Loop South, Suite 150 • Bellaire, TX 77401 • 713.777.5337

JOB NO: 00050-0099-01 DATE: 5/7/2026

APPROVED BY: RK

DATE: 05/2026

DESIGNED BY: SLJ

DRAWN BY: RHW

SURVEYED BY: WESTERN GROUP CONSULTANTS
FB NO. P-6414

STATE OF TEXAS
STACY L. JORDAN
148233
LICENSED
PROFESSIONAL ENGINEER
06.12.2026

CITY OF HOUSTON
HOUSTON PUBLIC WORKS

SCOTT STREET NO. 1
LIFT STATION REHABILITATION
ELECTRICAL

WET WEATHER PUMP STATION
SECTION - PROPOSED

WBS NUMBER	FOR CITY OF HOUSTON USE ONLY
R-000267-127A-4	
DRAWING SCALE	
AS NOTED	
CITY OF HOUSTON PM	
TAHA LOTIA	
DWG NO. 2-E-14	
SHEET NO. 153 OF 220	

F:\Users\KGI-StacyJordan\Kalluri Group, Inc\KGI - Documents\4285-QEL (Scott Street LS)\Drawings\Electrical\2-E-11 - 15 Wet Weather Pump Station Interior - All Proposed.dwg

ORIGINAL SCALE IN INCHES FOR REDUCED PLANS

NO.	DATE	REVISIONS	APP.

3/16" = 1'- 0"

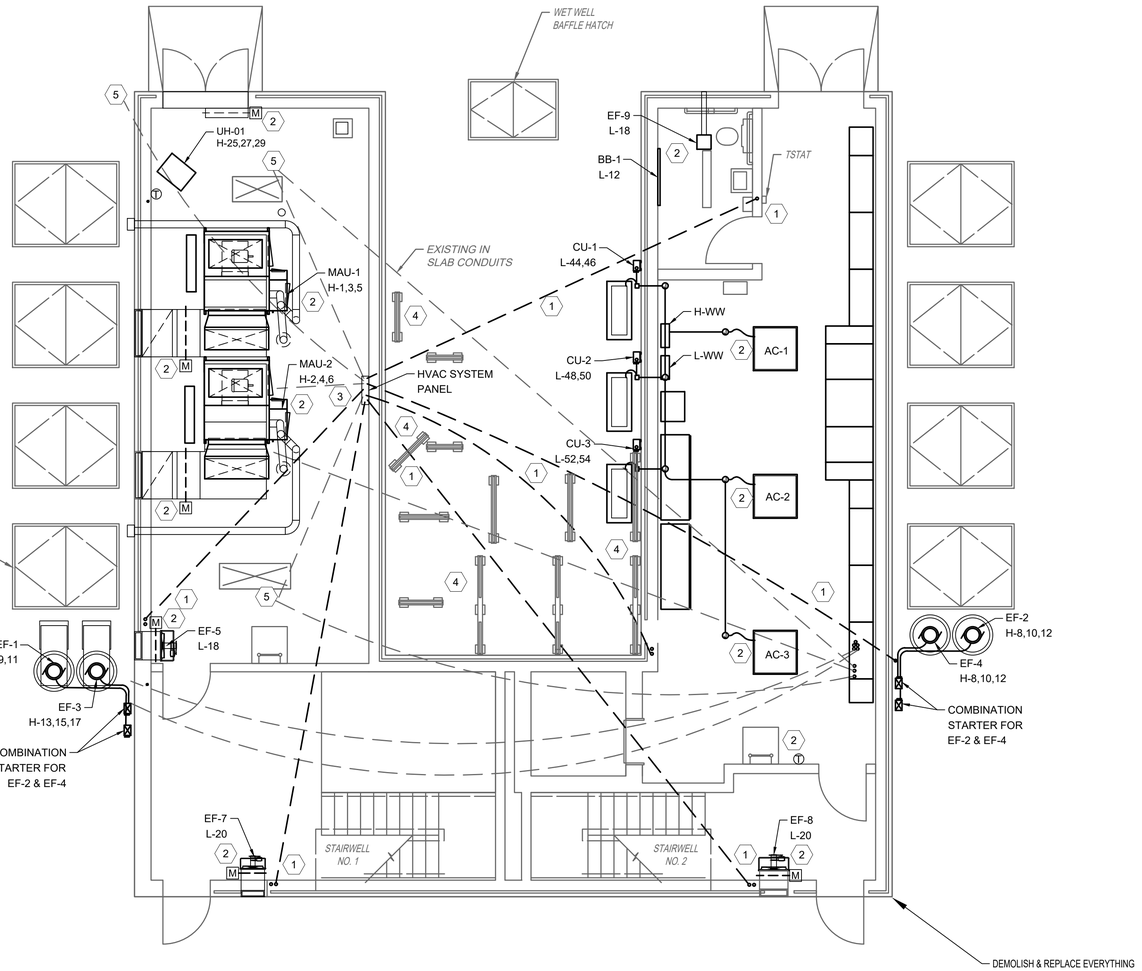

PROPOSED WET WEATHER PUMP STATION GROUND LEVEL HVAC

PLAN

3/16" = 1'-0"

KEYED NOTES:

1. EXISTING CONCRETE ENCASED HVAC CONDUITS MAY BE UTILIZED FOR PROPOSED CONDUCTORS. BE AWARE, PROPOSED PENETRATIONS AND ANCHORS WILL POSSIBLY DAMAGE EXISTING CAST IN CONCRETE CONDUITS.
2. CONTRACTOR SHALL COORDINATE TO PROVIDE CONDUIT AND CONDUCTORS FOR HVAC EQUIPMENT THAT WILL REQUIRE ANCILLARY DEVICE CONNECTIONS INCLUDING BUT NOT LIMITED TO; AC UNITS, DAMPERS, THERMOSTATS, TEMPERATURE SENSORS, GAS DETECTORS.
3. CONTRACTOR SHALL COORDINATE TO PROVIDE HVAC SYSTEM PANEL CONNECTIONS.
4. THE OVERHEAD CONDUIT RACKS ARE AVAILABLE FOR HVAC CONDUITS.
5. COORDINATE WITH STRUCTURAL TO HAVE ALL UNUSED IN SLAB CONDUITS CUT AND FLOOR PATCHED,

GENERAL NOTES:

A. THIS DRAWING IS PROVIDED TO ILLUSTRATE THE WET WEATHER PUMP STATION HVAC SYSTEM EQUIPMENT, CIRCUITS, AND CONDUITS.

B. CONTRACTOR SHALL COORDINATE TO PROVIDE HVAC CONDUIT AND CONDUCTORS. CONCRETE EMBEDDED CONDUITS THAT ARE CUT DURING CONSTRUCTION SHALL BE REPLACED WITH EXPOSED CONDUIT. DETERMINE EXISTING EMBEDDED CONDUITS THAT MAY BE UTILIZED FOR PROPOSED WORK. PROVIDE TEMPORARY FACILITIES PRIOR TO REMOVALS.

C. FOR CLARITY NOT ALL ITEMS REQUIRING REMOVAL AND REPLACEMENT ARE ILLUSTRATED HERE. IT IS A COMPLETE REMOVAL AND REPLACEMENT.

D. COORDINATE WITH HVAC PRIOR TO START OF REMOVALS TO SCHEDULE SCADA CONNECTION TRANSITIONS.

KGI Kalluri Group, Inc.
TBPE Registration No. F-665
16300 Katy Freeway, Suite 172
Houston, Texas 77094
Phone: (713)-365-9288
PROJECT 4285

QUIDDITY
Texas Board of Professional Engineers and Land Surveyors Reg. No. F-23290
6330 West Loop South, Suite 150 • Bellaire, TX 77401 • 713.777.5337

JOB NO: 00050-0099-01 DATE: 5/7/2026

APPROVED BY: RK

DATE: 05/2026

DESIGNED BY: SLJ

DRAWN BY: RHW

SURVEYED BY: WESTERN GROUP CONSULTANTS
FB NO. P-6414

STATE OF TEXAS
STACY L. JORDAN
148233
LICENSED
PROFESSIONAL ENGINEER
05.12.2026

CITY OF HOUSTON
HOUSTON PUBLIC WORKS

SCOTT STREET NO. 1 LIFT STATION REHABILITATION

ELECTRICAL

WET WEATHER PUMP STATION HVAC PLAN - PROPOSED

WBS NUMBER	FOR CITY OF HOUSTON USE ONLY
R-000267-127A-4	
DRAWING SCALE	
AS NOTED	
CITY OF HOUSTON PM	
TAHA LOTIA	
DWG NO. 2-E-15	
SHEET NO. 154 OF 220	

F:\Users\KGI-StacyJordan\Kalluri Group, Inc\KGI - Documents\4285-QEL (Scott Street LS)\Drawings\Electrical\2-E-11 - 15 Wet Weather Pump Station Interior - All Proposed.dwg

ORIGINAL SCALE IN INCHES FOR REDUCED PLANS

NO.	DATE	REVISIONS	APP.

GENERAL NOTES:

A. THIS DRAWING IS PROVIDED TO ILLUSTRATE THE A SECTION OF THE WET WEATHER PUMP STATION MCC–2.

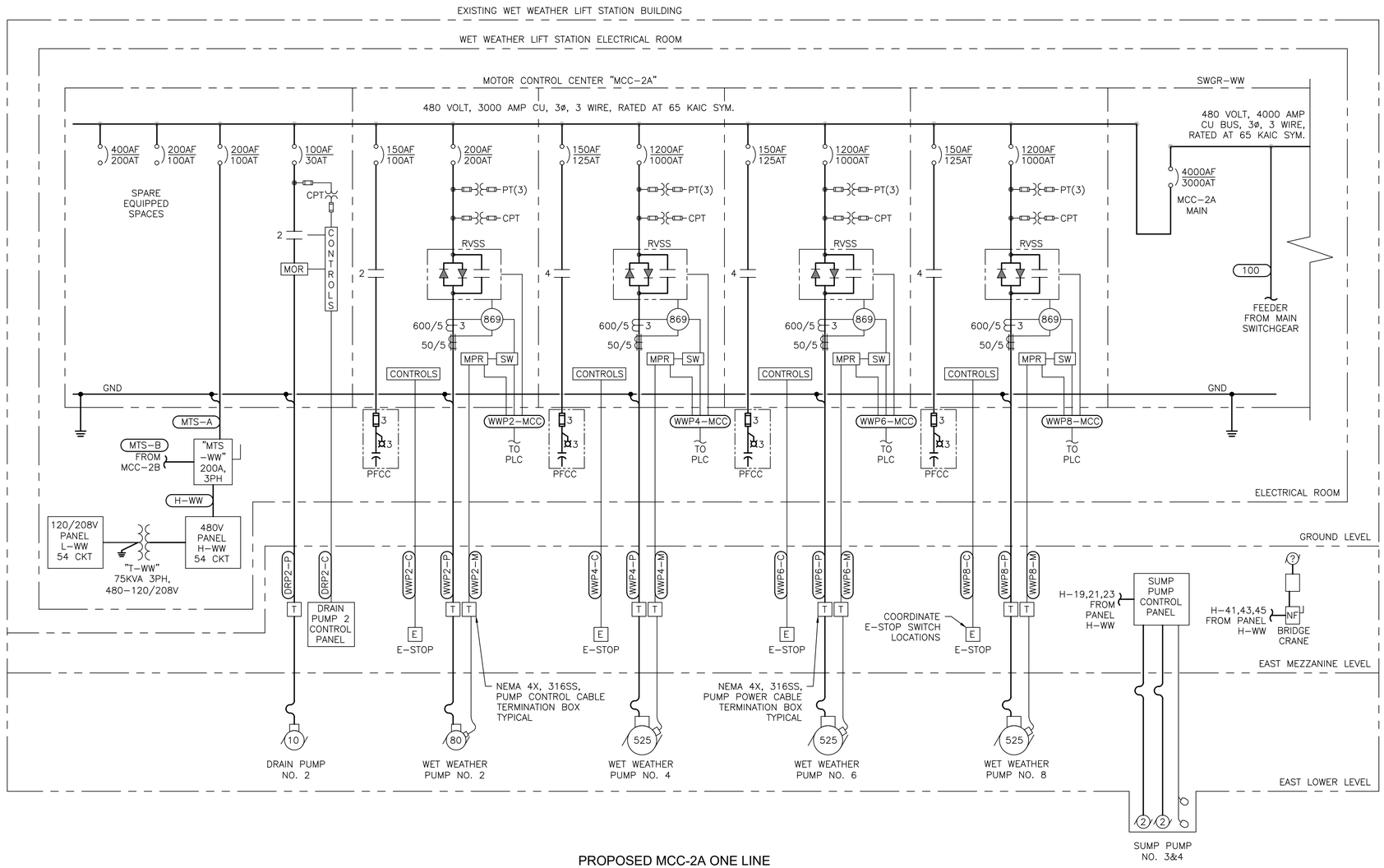

PROPOSED MCC-2A ONE LINE

DIAGRAM

NONE

KGI Kalluri Group, Inc.

TBPE Registration No. F–665
16300 Katy Freeway, Suite 172
Houston, Texas 77094
Phone: (713)–365–9288
PROJECT 4285

QUIDDITY
Texas Board of Professional Engineers and Land Surveyors Reg. No. F-23290
6330 West Loop South, Suite 150 • Bellaire, TX 77401 • 713.777.5337

JOB NO: 00050–0099–01 DATE: 5/7/2026

APPROVED BY: RK

DATE: 05/2026

DESIGNED BY: SLJ

DRAWN BY: RHW

SURVEYED BY: WESTERN GROUP CONSULTANTS
FB NO. P–6414

STATE OF TEXAS
STACY L. JORDAN
148233
LICENSED PROFESSIONAL ENGINEER
05.12.2026

CITY OF HOUSTON
HOUSTON PUBLIC WORKS

SCOTT STREET NO. 1 LIFT STATION REHABILITATION
ELECTRICAL
WET WEATHER PUMP STATION MCC-2A ONE LINE DIAGRAM - PROPOSED

WBS NUMBER	FOR CITY OF HOUSTON USE ONLY
R–000267–127A–4	
DRAWING SCALE	
AS NOTED	
CITY OF HOUSTON PM	
TAHA LOTIA	
DWG NO. 2–E–21	
SHEET NO. 155 OF 220	

F:\Users\KGI-StacyJordan\Kalluri Group, Inc\KGI - Documents\4285-QEL (Scott Street LS)\Drawings\Electrical\2-E-21 & 22 MCC2 One Line Diagrams - Proposed.dwg

0 1 2 3 4 5 ORIGINAL SCALE IN INCHES FOR REDUCED PLANS

NO.	DATE	REVISIONS	APP.

GENERAL NOTES:

A. THIS DRAWING IS PROVIDED TO ILLUSTRATE THE B SECTION OF THE WET WEATHER PUMP STATION MCC–2.

B. PUMP CONDUITS FROM MCC–2B SECTION SHALL BE ROUTED OUTDOORS TO THE MECHANICAL ROOM AND THEN DOWN TO THE MEZZANINE LEVEL.

C. WET WEATHER SWITCHGEAR SECTION SHALL BE PROVIDED A POWER METER AND PHASE FAIL RELAY CONNECTED TO THE WET WEATHER PLC.

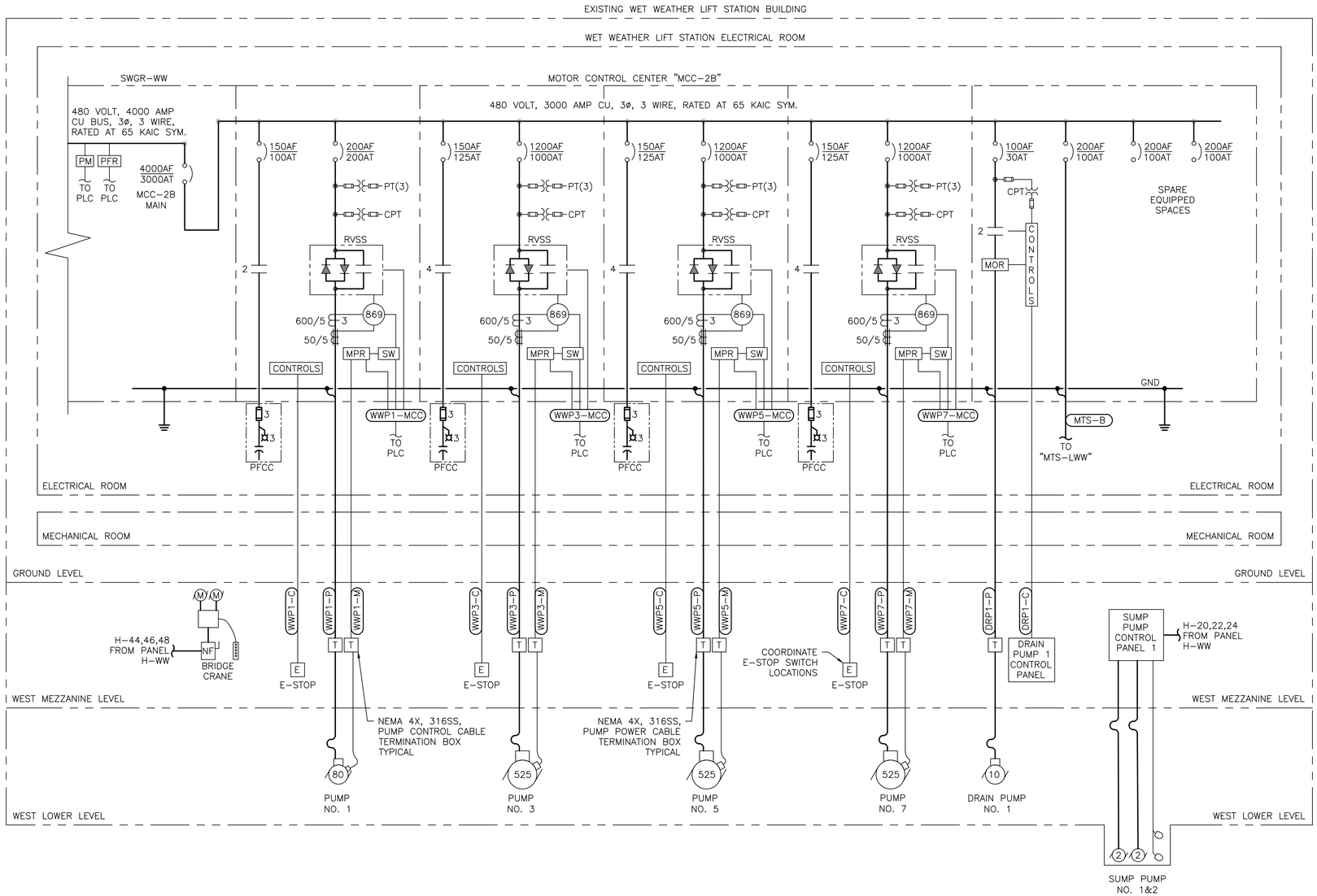

PROPOSED MCC-2B ONE LINE

DIAGRAM

NONE

KGI Kalluri Group, Inc.

TBPE Registration No. F–665
16300 Katy Freeway, Suite 172
Houston, Texas 77094
Phone: (713)–365–9288
PROJECT 4285

QUIDDITY

Texas Board of Professional Engineers and Land Surveyors Reg. No. F-23290
6330 West Loop South, Suite 150 • Bellaire, TX 77401 • 713.777.5337

JOB NO: 00050–0099–01 DATE: 5/7/2026

APPROVED BY: RK
DATE: 05/2026
DESIGNED BY: SLJ
DRAWN BY: RHW
SURVEYED BY: WESTERN GROUP CONSULTANTS
FB NO. P–6414

STATE OF TEXAS
STACY L. JORDAN
148233
LICENSED
PROFESSIONAL ENGINEER
06.12.2026

CITY OF HOUSTON
HOUSTON PUBLIC WORKS

SCOTT STREET NO. 1
LIFT STATION REHABILITATION
ELECTRICAL
WET WEATHER PUMP STATION
MCC-2B ONE LINE DIAGRAM - PROPOSED

WBS NUMBER	FOR CITY OF HOUSTON USE ONLY
R–000267–127A–4	
DRAWING SCALE	
AS NOTED	
CITY OF HOUSTON PM	
TAHA LOTIA	
DWG NO. 2–E–22	
SHEET NO. 156 OF 220	

F:\Users\KGI-StacyJordan\Kalluri Group, Inc\KGI - Documents\4285-QEL (Scott Street LS)\Drawings\Electrical\2-E-21 & 22 MCC2 One Line Diagrams - Proposed.dwg

ORIGINAL SCALE IN INCHES FOR REDUCED PLANS

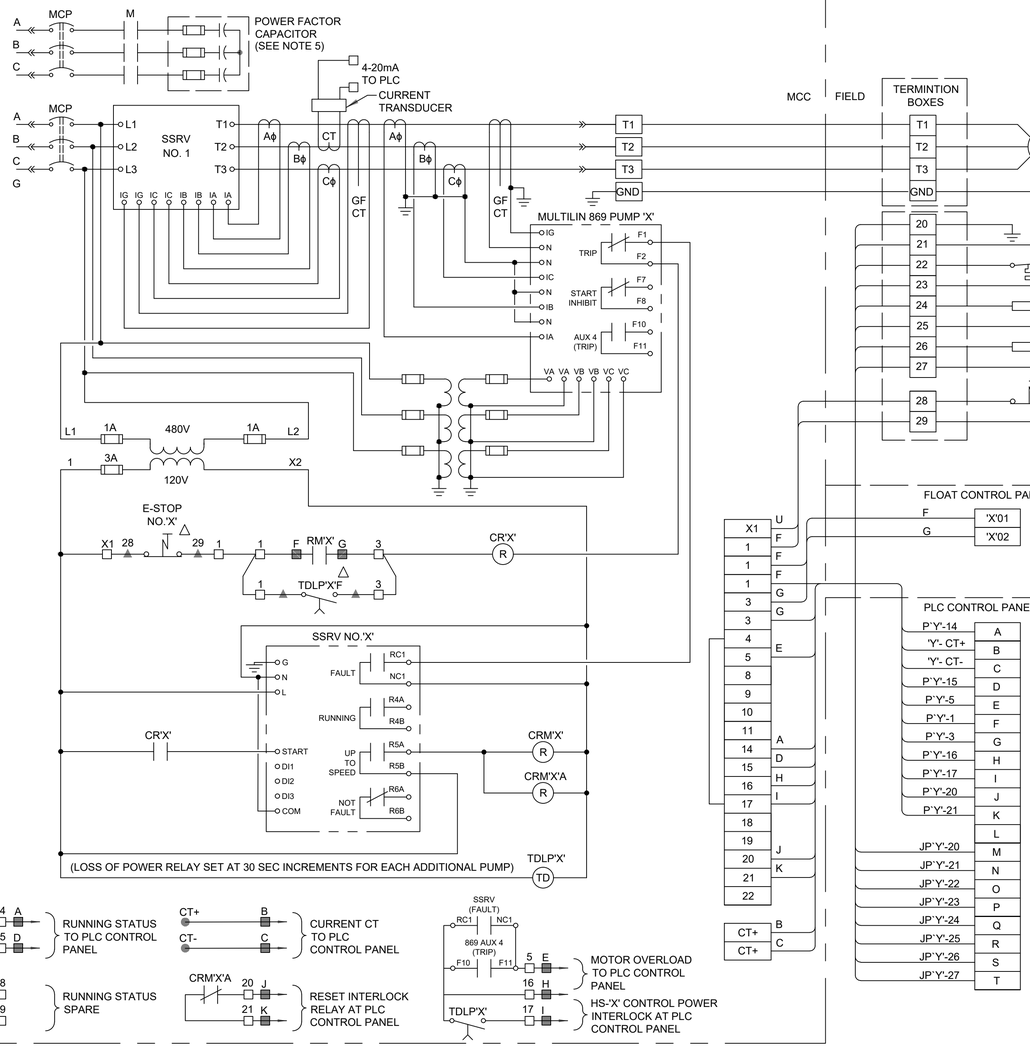

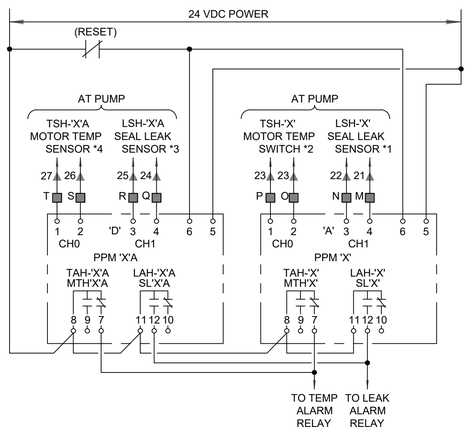

NOTES:

1. THE 'X' NOTATION IN SCHEMATIC DESIGNATIONS REPRESENTS APPLICABLE WET WEATHER PUMP NO. 1, 2, 3, ...
2. THE 'Y' NOTATION INDICATES MCC CIRCUIT NUMBER.
3. UNLESS OTHERWISE INDICATED, ALL DEVICES WITHOUT FURTHER DESIGNATION ARE LOCATED AT THE MOTOR CONTROL CENTER (MCC).
4. MOTOR OVERLOAD RELAY OUTPUT CONTACT SHOWN IS NORMALLY CLOSED WHEN RELAY IS DE-ENERGIZED. OPEN WHEN ENERGIZED, AND CLOSED WHEN IN ALARM. (VERIFY OPERATION OF RELAY PROVIDED AND ADJUST CONNECTION OF RMOR AUXILIARY RELAYS.)
5. CONTRACTOR TO COORDINATE POWER FACTOR CORRECTION CAPACITOR SIZE WITH PUMP MANUFACTURER.

WIRE TAG OR TERMINAL LABEL	PUMP NO.1	PUMP NO.2	PUMP NO.3	PUMP NO.4	PUMP NO.5	PUMP NO.6	PUMP NO.7	PUMP NO.8	FUNCTION
A	3P1	3P2	3P3	3P4	3P5	3P6	3P7	3P8	24VDC CONTROL
B	124	224	324	424	524	624	724	824	4-20mA CURRENT TRANSDUCER
C	125	225	325	425	525	625	725	825	4-20mA CURRENT TRANSDUCER
D	112	212	312	412	512	612	712	812	RUNNING STATUS CONTACT
E	117	217	317	417	517	617	717	817	PUMP OVERLOAD ALARM
F	109	209	309	409	509	609	709	809	RUN INTERLOCK
G	110	210	310	410	510	610	710	810	RUN INTERLOCK
H	102	202	302	402	502	602	702	802	LOSS OF POWER TIMER
I	103	203	303	403	503	603	703	803	LOSS OF POWER TIMER
J	126	226	326	426	526	626	726	826	ALARM RESET INTERLOCK
K	127	227	327	427	527	627	727	827	ALARM RESET INTERLOCK
L	116	216	316	416	516	616	716	816	FLOAT SWITCH RUN INTERLOCK
M	120	220	320	420	520	620	720	820	SEAL LEAK DETECTOR
N	121	221	321	421	521	621	721	821	SEAL LEAK DETECTOR
O	122	222	322	422	522	622	722	822	MOTOR TEMPERATURE SWITCH
P	123	223	323	423	523	623	723	823	MOTOR TEMPERATURE SWITCH
Q	120A	220A	320A	420A	520A	620A	720A	820A	SEAL LEAK DETECTOR
R	121A	221A	321A	421A	521A	621A	721A	821A	SEAL LEAK DETECTOR
S	122A	222A	322A	422A	522A	622A	722A	822A	MOTOR TEMPERATURE SWITCH
T	123A	223A	323A	423A	523A	623A	723A	823A	MOTOR TEMPERATURE SWITCH
U	101	201	301	401	501	601	701	801	FIELD E-STOP INTERLOCK

LEGEND

- △ DEVICE OR FIELD TERMINAL LOCATED AT MOTOR
- ✳ DEVICE OR FIELD TERMINAL LOCATED REMOTE
- □ DEVICE OR FIELD TERMINAL LOCATED AT POWER PANEL
- ■ FIELD TERMINAL LOCATED AT CONTROL PANEL
- ▲ REMOTE TERMINAL
- ● DEVICE TERMINAL NO.
- ◆ PC INTERFACE TERMINAL

NO.	DATE	REVISIONS	APP.

NOTICE:
FOR YOUR SAFETY, YOU ARE REQUIRED BY TEXAS LAW TO CALL 811 AT LEAST 48 HOURS BEFORE YOU DIG SO THAT UNDERGROUND LINES CAN BE MARKED. THIS SIGNATURE DOES NOT FULFILL YOUR OBLIGATION TO CALL 811

VERIFICATION OF PRIVATE UTILITY LINES

Date:

CenterPoint Energy natural gas utilities shown.
(Gas services lines are not shown). This signature not to be used for conflict verification.

Signature Valid for six months.

Date:

CenterPoint Energy / UNDERGROUND Electrical Facilities Verification ONLY.
(This Signature verifies existing underground facilities - not to be used for conflict verification.)

Signature Valid for six months.

Date:

Approved for AT&T Texas / SWBT underground conduit facilities only.
Signature valid for one year.

KGI Kalluri Group, Inc.
TBPE Registration No. F-665
16300 Katy Freeway, Suite 172
Houston, Texas 77094
Phone: (713)-365-9288
PROJECT 4285

QUIDDITY
Texas Board of Professional Engineers and Land Surveyors Reg. No. F-23290
6330 West Loop South, Suite 150 • Bellaire, TX 77401 • 713.777.5337

JOB NO: 00050-0099-01 DATE: 5/7/2026

APPROVED BY: RK

DATE: 05/2026

DESIGNED BY: SLJ

DRAWN BY: RHW

SURVEYED BY: WESTERN GROUP CONSULTANTS
FB NO. P-6414

STATE OF TEXAS
STACY L. JORDAN
148233
LICENSED PROFESSIONAL ENGINEER
06.12.2026

CITY OF HOUSTON
HOUSTON PUBLIC WORKS

SCOTT STREET NO. 1 LIFT STATION REHABILITATION
ELECTRICAL

WET WEATHER PUMP TYPICAL MCC CONTROL DIAGRAM

WBS NUMBER	FOR CITY OF HOUSTON USE ONLY
R-000267-127A-4	
DRAWING SCALE	
AS NOTED	
CITY OF HOUSTON PM	
TAHA LOTIA	
DWG NO. 2-E-23	
SHEET NO. 157 OF 220	

F:\Users\KGI-StacyJordan\Kalluri Group, Inc\KGI - Documents\4285-QEL (Scott Street LS)\Drawings\Electrical\2-E-23 Wet Weather Pump Typical MCC Control Diagram.dwg

ORIGINAL SCALE IN INCHES FOR REDUCED PLANS

NO.	DATE	REVISIONS	APP.

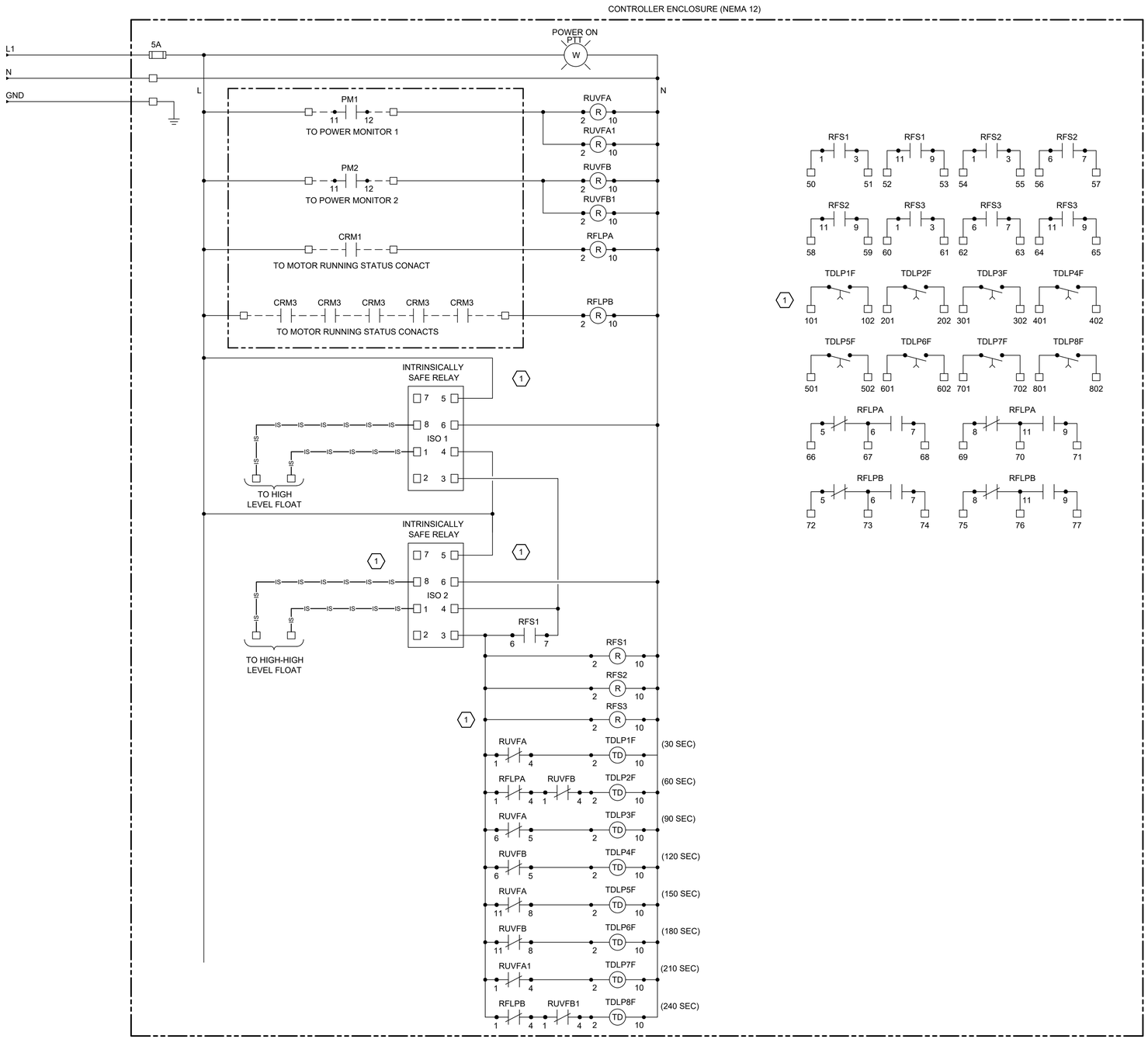

GENERAL NOTES:

A. CONTROL PANEL SHALL BE UL698A LISTED ENCLOSED INDUSTRIAL CONTROL PANEL. PANEL SHALL BE DESIGNED, CONSTRUCTED AND INSTALLED IN ACCORDANCE WITH NEC AND UL STANDARDS.

B. ALL INTRINSICALLY SAFE WIRING SHALL BE SEPARATED FROM NON-INTRINSICALLY SAFE WIRING. REFER TO NEC ARTICLE 504 FOR INSTALLATION OF INTRINSICALLY SAFE WIRING.

KEYED NOTES:

(1) ALL FLOAT CONTROL CIRCUIT CONDUCTORS SHALL HAVE YELLOW INSULATION.

LEGEND

- △ DEVICE OR FIELD TERMINAL LOCATED AT MOTOR
- ✶ DEVICE OR FIELD TERMINAL LOCATED REMOTE
- □ DEVICE OR FIELD TERMINAL LOCATED AT MCC/POWER PANEL
- ■ FIELD TERMINAL LOCATED AT CONTROL PANEL
- ▲ REMOTE TERMINAL
- ● DEVICE TERMINAL NO.
- ◆ PLC INTERFACE TERMINAL

BACKUP FLOAT CONTROLLER SCHEMATIC

DIAGRAM
NONE

KGI Kalluri Group, Inc.
TBPE Registration No. F-665
16300 Katy Freeway, Suite 172
Houston, Texas 77094
Phone: (713)-365-9288
PROJECT 4285

QUIDDITY
Texas Board of Professional Engineers and Land Surveyors Reg. No. F-23290
6330 West Loop South, Suite 150 • Bellaire, TX 77401 • 713.777.5337

JOB NO: 00050-0099-01 DATE: 5/7/2026

APPROVED BY: RK

DATE: 05/2026

DESIGNED BY: SLJ

DRAWN BY: RHW

SURVEYED BY: WESTERN GROUP CONSULTANTS
FB NO. P-6414

STATE OF TEXAS
STACY L. JORDAN
148233
LICENSED
PROFESSIONAL ENGINEER
06.12.2026

CITY OF HOUSTON
HOUSTON PUBLIC WORKS

SCOTT STREET NO. 1 LIFT STATION REHABILITATION
ELECTRICAL
WET WEATHER BACKUP FLOAT CONTROL PANEL SCHEMATIC DIAGRAM

WBS NUMBER	FOR CITY OF HOUSTON USE ONLY
R-000267-127A-4	
DRAWING SCALE	
AS NOTED	
CITY OF HOUSTON PM	
TAHA LOTIA	
DWG NO. 2-E-24	
SHEET NO. 158 OF 220	

F:\Users\KGI-StacyJordan\Kalluri Group, Inc\KGI - Documents\4285-QEL (Scott Street LS)\Drawings\Electrical\2-E-24 Wet Weather Backup Float Control Schematic Diagram.dwg

0 1 2 3 4 5 ORIGINAL SCALE IN INCHES FOR REDUCED PLANS

NO.	DATE	REVISIONS	APP.

NOTES:

1. BREAKER SHALL BE PROVIDED "FACTORY" PAD LOCK PROVISIONS.
2. SEE SPECIFICATION 16290 FOR SURGE PROTECTION DEVICE REQUIREMENTS.

PANELBOARD H-WW IS TO BE LOCATED IN THE WET WEATHER LIFT STATION BUILDING ELECTRICAL ROOM

PANEL H-WW

FEEDER 4/0 AWG
BUS AMPS 225
MAIN LUG ONLY YES
VOLTS 480/277 AIC 65 KA
PHASE 3 WIRE 3

NOTES
1. SURFACE MOUNT
2. NEMA 12 ENCLOSURE
3. PHASE, AND GROUND BUS SHALL BE COPPER

A B C

	CKT. DESCRIPTION	WIRE	LOAD	BKR.			BKR.	LOAD	WIRE	CKT. DESCRIPTION	
		10			1	2			10		
1	MAKE UP AIR HANDLER MAU-1	10	6,319	15	3	4	20	9,145	10	MAKE UP AIR HANDLER UNIT 2	1
		10			5	6			10		
		12			7	8			12		
1	EXHAUST FAN EF-1	12	1,746	15	9	10	15	1,746	12	EXHAUST FAN EF-2	1
		12			11	12			12		
		12			13	14			12		
1	EXHAUST FAN EF-3	12	1,746	15	15	16	15	1,746	12	EXHAUST FAN EF-4	1
		12			17	18			12		
		10			19	20			10		
1	SUMP PUMP CP-1	10	5,653	20	21	22	20	5,653	10	SUMP PUMP CP-2	1
		10			23	24			10		
		8			25	26			–		
	ELECTRIC HEATER UH-1	8	10,000	30	27	28	20	–	–	SPARE	1
		8			29	30			–		
		–			31	32			–		
	SPARE	–	–	20	33	34	20	–	–	SPARE	
		–			35	36			–		
		–			37	38			–		
	SPARE	–	–	20	39	40	15	–	–	SPARE	
		–			41	42			–		
		10			43	44			10		
	EAST BRIDGE CRANE	10	6,319	30	45	46	30	6,319	10	WEST BRIDGE CRANE	
		10			47	48			10		
		8			49	50			–		
2	SURGE PROTECTIVE DEVICE	8	–	30	51	52	100	39,050	–	TRANSFORMER T-WW	
		8			53	54			–		
			34,483		G			63,641			

TOTAL CONNECTED VA = 98,124
98.1 KVA = 118 AMPS AT 480 VOLTS
THE FEEDER CONDUCTORS, PANEL BUS, AND MAIN BREAKER ARE ALL RATED PROPERLY TO SERVE THE LOAD BRANCH CONDUCTORS ARE NOT SHOWN IN THE CONDUIT SCHEDULE

PANELBOARD L-WW IS TO BE LOCATED IN THE WET WEATHER LIFT STATION BUILDING ELECTRICAL ROOM

PANEL L-WW

FEEDER 4/0 AWG
BUS AMPS 225
MAIN BREAKER 200A
VOLTS 480/277 AIC 35 KA
PHASE 3 WIRE 4

NOTES
1. SURFACE MOUNT
2. NEMA 1 ENCLOSURE
3. PHASE, NEUTRAL AND GROUND BUS SHALL BE COPPER

200

CKT. DESCRIPTION	WIRE	LOAD	BKR.	A	B	C		BKR.	LOAD	WIRE	CKT. DESCRIPTION
ELECTRICAL ROOM LIGHTING	12	400	20	1			2	20	600	12	SWITCHGEAR & MCC SPACE HEATERS
MECHANICAL ROOM LIGHTING	12	400	20	3			4	20	500	12	BATHROOM BASEBOARD HEATER
ELECTRICAL ROOM RECEPTACLES	12	720	20	5			6	20	400	12	HOT WATER HEATER
MECHANICAL ROOM RECEPTACLES	12	360	20	7			8	20	800	12	DRINKING WATER FOUNDATION
INTERMEDIATE LEVEL WEST LIGHTING	12	500	20	9			10	20	1500	12	AIR HAND DRYER
INTERMEDIATE LEVEL WEST RECEPTACLES	12	360	20	11			12	20	500	12	BASE BOARD HEATER BB-1
INTERMEDIATE LEVEL EAST LIGHTING	12	500	20	13			14	20	1200	12	COMPRESSED AIR DRYER
INTERMEDIATE LEVEL EAST RECEPTACLES	12	360	20	15			16	20	500	12	HVAC SYSTEM CONTROL PANEL TCP-1
LOWER LEVEL WEST LIGHTING	12	500		17			18	30	500	12	EXHAUST FANS 5&9
LOWER LEVEL WEST RECEPTACLES	12	360		19			20	30	450	12	EXHAUST FANS 7&8
LOWER LEVEL EAST LIGHTING	12	500	20	21			22	20	–	–	SPARE
LOWER LEVEL EAST RECEPTACLES	12	360	20	23			24	20	–	–	SPARE
BUILDING EXTERIOR WALL LIGHTING	12	800	20	25			26	20	–	–	SPARE
LIGHTING CONTACTOR CONTROLS	12	100	20	27			28	20	–	–	SPARE
WET WEATHER SCADA CONTROL PANEL	12	400	20	29			30	20	–	–	SPARE
WET WEATHER SCADA UPS SYSTEM	12	800	20	31			32	20	–	–	SPARE
LEVEL TRANSMITTERS	12	200	20	33			34	20	–	–	SPARE
SPARE	–	–	20	35			36	20	–	–	SPARE
SPARE	–	–	20	37			38	20	–	–	SPARE
SPARE	–	–	20	39			40	20	–	–	SPARE
SPARE	–	–	20	41			42	20	–	–	SPARE
SPARE	–	–	50	43			44	50	8160	8	CU-1
	–	–		45			46			8	
SPARE	–	–	50	47			48	50	8160	8	CU-2
	–	–		49			50			8	
SPARE	–	–	50	51			52	50	8160	8	CU-3
	–	–		53			54			8	
		7,620		N		G			31,430		

TOTAL CONNECTED VA = 39,050
39.1 KVA = 108.5 AMPS AT 208 VOLTS
THE TRANSFORMER, FEEDER CONDUCTORS, PANEL BUS, AND MAIN BREAKER ARE ALL RATED PROPERLY TO SERVE THE LOAD BRANCH CONDUCTORS ARE NOT SHOWN IN THE CONDUIT SCHEDULE

KGI Kalluri Group, Inc.
TBPE Registration No. F-665
16300 Katy Freeway, Suite 172
Houston, Texas 77094
Phone: (713)-365-9288
PROJECT 4285

QUIDDITY
Texas Board of Professional Engineers and Land Surveyors Reg. No. F-23290
6330 West Loop South, Suite 150 • Bellaire, TX 77401 • 713.777.5337

JOB NO: 00050-0099-01 DATE: 5/7/2026

APPROVED BY: RK
DATE: 05/2026
DESIGNED BY: SLJ
DRAWN BY: RHW
SURVEYED BY: WESTERN GROUP CONSULTANTS
FB NO. P-6414

STATE OF TEXAS
STACY L. JORDAN
148233
LICENSED
PROFESSIONAL ENGINEER
06.12.2026

CITY OF HOUSTON
HOUSTON PUBLIC WORKS

SCOTT STREET NO. 1 LIFT STATION REHABILITATION
ELECTRICAL
WET WEATHER PUMP STATION PANELBOARD SCHEDULES - PROPOSED

WBS NUMBER	FOR CITY OF HOUSTON USE ONLY
R-000267-127A-4	
DRAWING SCALE	
AS NOTED	
CITY OF HOUSTON PM	
TAHA LOTIA	
DWG NO. 2-E-25	
SHEET NO. 159 OF 220	

F:\Users\KGI-StacyJordan\Kalluri Group, Inc\KGI - Documents\4285-QEL (Scott Street LS)\Drawings\Electrical\2-E-25 Wet Weather Pump Station Panelboard Schedules - Proposed.dwg

ORIGINAL SCALE IN INCHES FOR REDUCED PLANS

NO.	DATE	REVISIONS	APP.

KEYED NOTES:

1. CHEMICAL STORAGE FACILITY POWER, CONTROLS, AND SCADA COMMUNICATIONS SHALL BE SERVED FROM THE ODOR CONTROL EQUIPMENT RACK.
2. CHEMICAL STORAGE TANK FILL STATION PANEL SHALL BE INSTALLED SIMILAR TO PUMP CABLE TERMINATION BOXES, SEE DETAILS.
3. COORDINATE INSTRUMENT THREADED CONNECTION WITH TANK VENDOR. PROVIDE 120VAC CIRCUIT AT EACH LEVEL INSTRUMENT LOCATION, EVEN IF DEVICES ARE LOOP POWERED. ALL THREE CHEMICAL STORAGE TANK LEVEL SIGNALS SHALL BE SHARED BETWEEN FILL PANEL DISPLAY AND SCADA NETWORK.
4. NO CONDUIT SHALL BE ROUTED INSIDE THE CONTAINMENT BELOW THE TOP OF THE WALL ELEVATION. COORDINATE TO ROUTE CONDUIT FROM UNDERGROUND UP IN THE STORAGE TANK FOUNDATION.
5. THE METERING PUMP SHELTER SHALL BE A PREFABRICATED, FULLY EQUIPPED, PRE-WIRED PLASTIC STRUCTURE. ALL CONDUIT INSIDE THE SHELTER SHALL BE SCHEDULE 80 PLASTIC PVC. ALL CONDUIT FITTINGS, BOXES, AND CONDULETS SHALL BE PLASTIC PVC.
6. ALL OUTDOORS RECEPTACLES SHALL HAVE GFCI PROTECTION BREAKERS, AND A WEATHERPROOF IN-USE COVER.

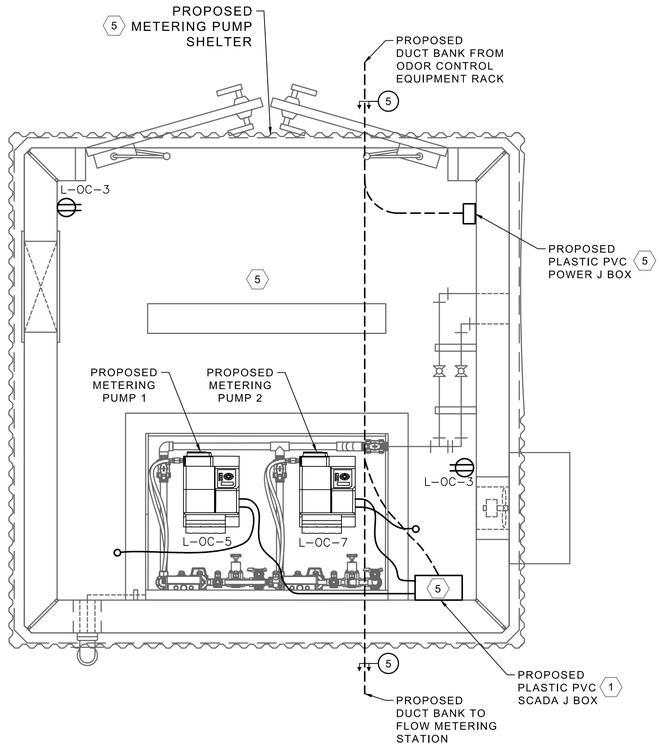

METERING PUMP SHELTER

PLAN

NTS

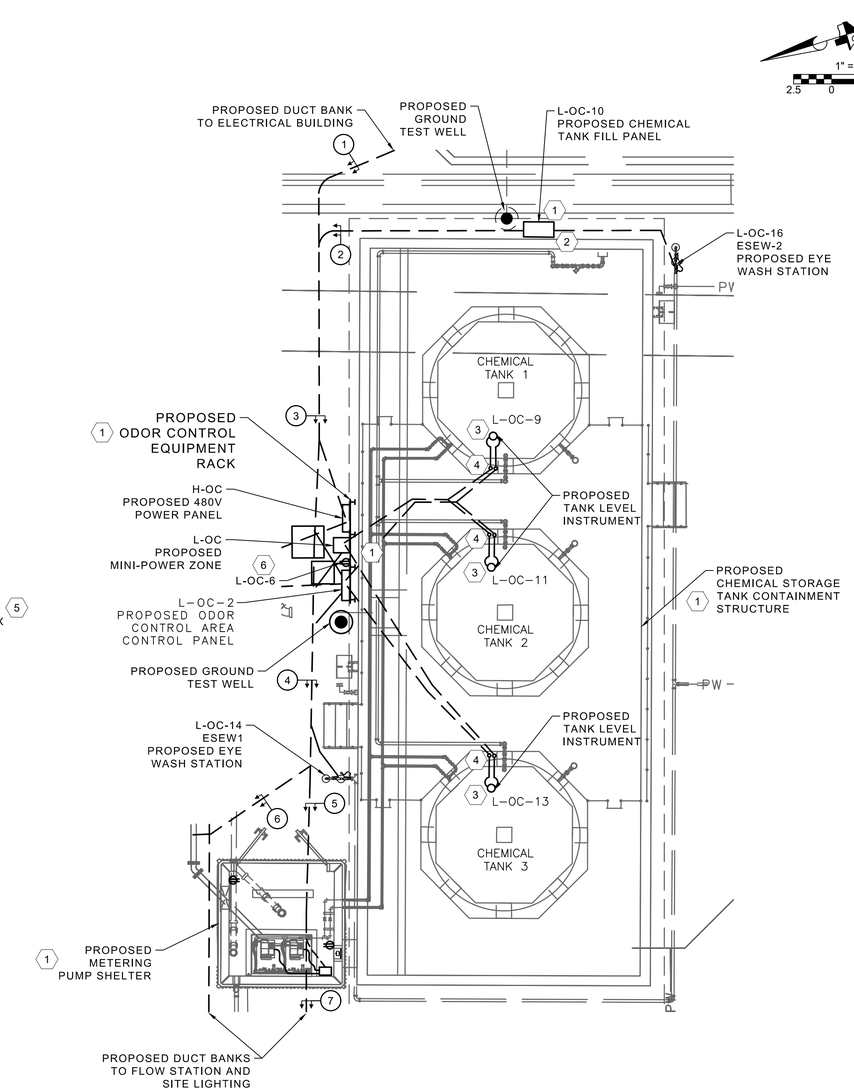

CHEMICAL FEED AND STORAGE FACILITY ENLARGED

PLAN

1" = 5'-0"

1" = 5'

2.5 0 5

DUCT BANK CONDUITS

1. 004, SL-W, H-OC-P, SP-OC
2. L-OC-10, L-OC-16, CSFP-C, EW2-C
3. L-OC-10, L-OC-16, 004, SL-W, CSFP-C, EW2-C, H-OC-P, SP-OC
4. H-OC-1, H-OC-2, OCB1-C, OCB2-C, MPS-P, FCV1-P, FCV2-P, FM-P, MPS-C, FCV1-C, FCV2-C, FM-S, FP-S
5. MPS-P, FCV1-P, FCV2-P, FM-P, MPS-C, FCV1-C, FCV2-C, FM-S, FP-S
6. H-OC-1, H-OC-2, OCB1-C, OCB2-C
7. FCV1-P, FCV2-P, FM-P, FCV1-C, FCV2-C, FM-S, FP-S

GENERAL NOTES:

A. THIS DRAWING ILLUSTRATES THE PROPOSED CHEMICAL STORAGE AND FEED AREAS. SEE DIVISION 13 AND 16 SPECIFICATIONS FOR ALL PROPOSED WORK AND EQUIPMENT REQUIREMENTS.

B. CONTRACTOR SHALL COORDINATE PRIOR TO THE BID TO INCLUDE ALL ELECTRICAL INSTRUMENTATION AND CONTROL REQUIRED FOR CONTRACTORS CHOSEN CHEMICAL EQUIPMENT.

C. CONTRACTOR HAS TASKS, IN THIS PROJECT, IN NEAR PROXIMITY TO CPE OVERHEAD POWER LINES. CONTRACTOR SHALL FOLLOW NEC AND CPE STANDARDS FOR SAFE WORKING DISTANCE, TEMPORARY SIGNAGE AND PROCEDURES.

D. TEMPORARY PROVISIONS ARE TO REMAIN IN SERVICE WHILE PROPOSED WORK, INCLUDING POWER, CONTROLS, SCADA AND COMMUNICATIONS, IS TESTED AND ACCEPTED.

KGI Kalluri Group, Inc.
TBPE Registration No. F-665
16300 Katy Freeway, Suite 172
Houston, Texas 77094
Phone: (713)-365-9288
PROJECT 4285

QUIDDITY
Texas Board of Professional Engineers and Land Surveyors Reg. No. F-23290
6330 West Loop South, Suite 150 • Bellaire, TX 77401 • 713.777.5337

JOB NO: 00050-0099-01 DATE: 5/7/2026

APPROVED BY: RK

DATE: 05/2026

DESIGNED BY: SLJ

DRAWN BY: RHW

SURVEYED BY: WESTERN GROUP CONSULTANTS
FB NO. P-6414

STATE OF TEXAS
STACY L. JORDAN
148233
LICENSED
PROFESSIONAL ENGINEER
06.12.2026

CITY OF HOUSTON
HOUSTON PUBLIC WORKS

SCOTT STREET NO. 1 LIFT STATION REHABILITATION

ELECTRICAL

CHEMICAL FEED AND STORAGE FACILITY ENLARGED PLAN - PROPOSED

WBS NUMBER	FOR CITY OF HOUSTON USE ONLY
R-000267-127A-4	
DRAWING SCALE	
AS NOTED	
CITY OF HOUSTON PM	
TAHA LOTIA	
DWG NO. 3-E-01	
SHEET NO. 160 OF 220	

D:\Kalluri Group, Inc\KGI - Documents\4285-QEL (Scott Street LS)\Drawings\Electrical\0-E-04 -10 -11 Electrical Site Plans.dwg

0 1 2 3 4 5 ORIGINAL SCALE IN INCHES FOR REDUCED PLANS

NO.	DATE	REVISIONS	APP.

KEYED NOTES:

1. PROVIDE RACK FOR JUNCTION AND TERMINATION BOXES, PER DETAILS.
2. ALL OUTDOORS RECEPTACLES SHALL HAVE GFCI PROTECTION BREAKERS, AND A WEATHERPROOF IN-USE COVER.

DUCT BANK CONDUITS

1. FCV1-P, FCV2-P, FM-P, FCV1-C, FCV2-C, FM-S, FP-S
2. FM-P, SL-S, FM-S, FP-S

GENERAL ELECTRICAL NOTES:

A. THIS DRAWING ILLUSTRATES THE FLOW CONTROL STATION; PROPOSED ELECTRICAL, INSTRUMENTATION AND EQUIPMENT LOCATIONS. IT DESCRIBES MECHANICAL EQUIPMENT, AND INSTRUMENTS TO BE PROVIDED IN THIS PROJECT. SEE DETAIL DRAWINGS, DIVISION 13 AND DIVISION 16 SPECIFICATIONS FOR ALL ASPECTS OF SUPPLY.

B. THE FLOW CONTROL STATION EQUIPMENT WILL BE ACCESSED FROM THE ELEVATED PLATFORM NOT SHOWN.

C. CONTRACTOR SHALL COORDINATE PRIOR TO THE BID TO INCLUDE ALL ELECTRICAL INSTRUMENTATION AND CONTROL REQUIRED FOR CONTRACTORS CHOSEN EQUIPMENT. .

D. CONTRACTOR HAS TASKS, IN THIS PROJECT, IN NEAR PROXIMITY TO CNP OVERHEAD POWER LINES. CONTRACTOR SHALL FOLLOW NEC AND CNP STANDARDS FOR SAFE WORKING DISTANCE, TEMPORARY SIGNAGE AND PROCEDURES.

E. GROUNDING SHALL BE RECONNECTED AND INSTALLED PER SPECIFICATIONS.

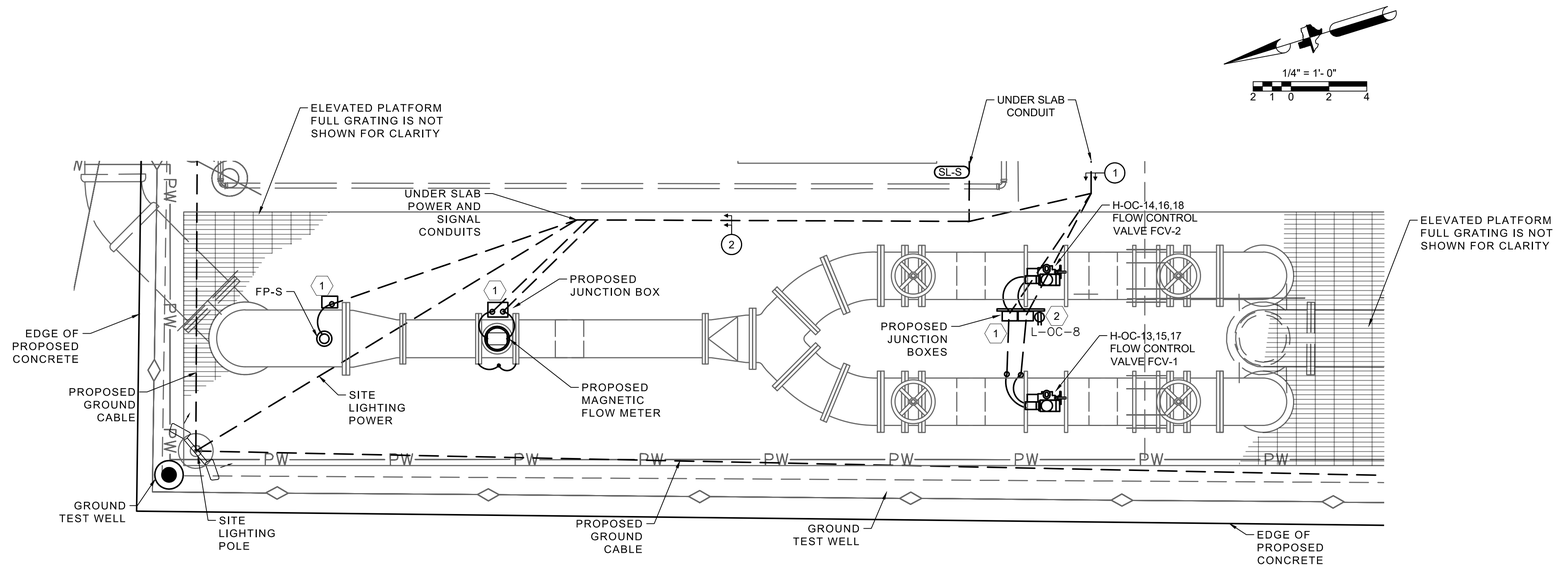

PROPOSED FLOW CONTROL STATION ENLARGED

PLAN

1/4" = 1'-0"

KGI Kalluri Group, Inc.
TBPE Registration No. F-665
16300 Katy Freeway, Suite 172
Houston, Texas 77094
Phone: (713)-365-9288
PROJECT 4285

QUIDDITY
Texas Board of Professional Engineers and Land Surveyors Reg. No. F-23290
6330 West Loop South, Suite 150 • Bellaire, TX 77401 • 713.777.5337

JOB NO: 00050-0099-01 DATE: 5/7/2026

APPROVED BY: RK

DATE: 05/2026

DESIGNED BY: SLJ

DRAWN BY: RHW

SURVEYED BY: WESTERN GROUP CONSULTANTS

FB NO. P-6414

STATE OF TEXAS — STACY L. JORDAN — 148233 — LICENSED PROFESSIONAL ENGINEER — 06.12.2026

CITY OF HOUSTON
HOUSTON PUBLIC WORKS

SCOTT STREET NO. 1 LIFT STATION REHABILITATION
ELECTRICAL

FLOW CONTROL STATION ENLARGED PLAN - PROPOSED

WBS NUMBER	FOR CITY OF HOUSTON USE ONLY
R-000267-127A-4	
DRAWING SCALE	
AS NOTED	
CITY OF HOUSTON PM	
TAHA LOTIA	
DWG NO. 4-E-01	
SHEET NO. 161 OF 220	

D:\Kalluri Group, Inc\KGI - Documents\4285-QEL (Scott Street LS)\Drawings\Electrical\0-E-04 -10 -11 Electrical Site Plans.dwg

0 1 2 3 4 5

ORIGINAL SCALE IN INCHES FOR REDUCED PLANS

NO.	DATE	REVISIONS	APP.

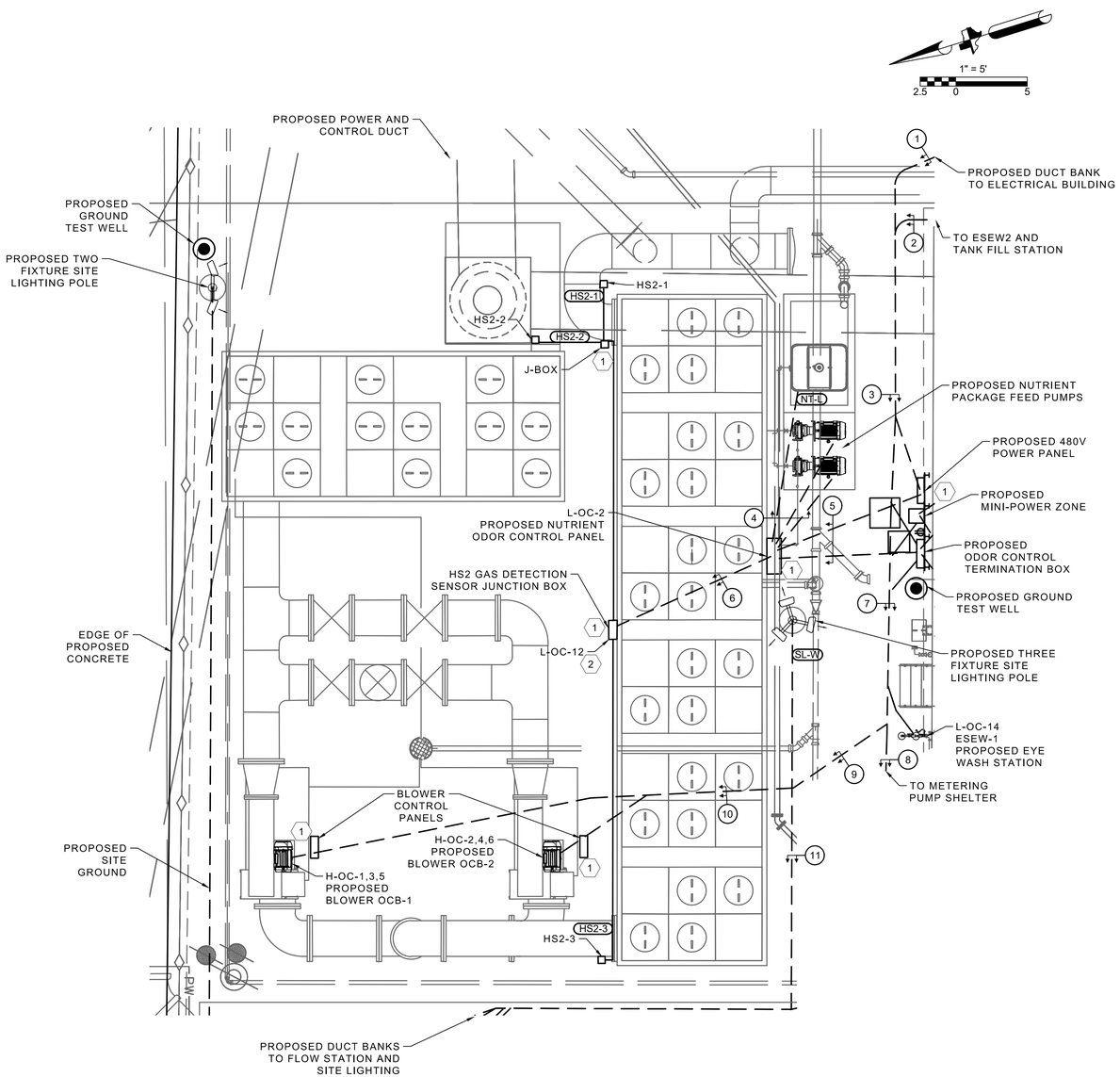

PROPOSED ODOR CONTROL SYSYEM ENLARGED

PLAN

1" = 5'-0"

KEYED NOTES:

1. PROVIDE RACK FOR PANELS AND TERMINATION BOXES, PER DETAILS.
2. NUTRIENT JUNCTION BOX SHALL BE PROVIDED A CONVENIENCE RECEPTACLE INSIDE THE ENCLOSURE

DUCT BANK CONDUITS

1. 004 SL-W H-OC-P SP-OC
2. L-OC-10 L-OC-16 / CSFP-C EW2-C
3. CSFP-P L-OC-16 004 SL-W / CSFP-C EW2-C H-OC-P SP-OC
4. NBP1-P NBP2-P NT-L / NBP1-C NBP2-C
5. NCP-P HS2-P / NCP-C HS2-C
6. HS2-P HS2-C
7. OCB1-P OCB2-P FCV1-P / OCB1-C OCB2-C FCV1-C / MPS-P FCV1-P FCV2-P FM-P / MPS-C FCV1-C FCV2-C FM-S FP-S
8. MPS-P MPS-C
9. OCB1-P OCB2-P FCV1-P FCV2-P FM-P / OCB1-C OCB2-C FCV1-C FCV2-C FM-S FP-S
10. OCB1-P OCB2-P / OCB1-C OCB2-C
11. FCV1-P FCV2-P FM-P SL-W / FCV1-C FCV2-C FM-S FP-S

GENERAL NOTES:

A. THIS DRAWING ILLUSTRATES THE PROPOSED ODOR CONTROL NUTRIENT AND CARBON PACKAGE AREA. SEE DIVISION 13 AND 16 SPECIFICATIONS FOR ALL PROPOSED WORK AND EQUIPMENT REQUIREMENTS.

B. CONTRACTOR SHALL COORDINATE PRIOR TO THE BID TO INCLUDE ALL ELECTRICAL INSTRUMENTATION AND CONTROL REQUIRED FOR CONTRACTORS CHOSEN ODOR CONTROL EQUIPMENT.

C. CONTRACTOR HAS TASKS, IN THIS PROJECT, IN NEAR PROXIMITY TO CPE OVERHEAD POWER LINES. CONTRACTOR SHALL FOLLOW NEC AND CPE STANDARDS FOR SAFE WORKING DISTANCE, TEMPORARY SIGNAGE AND PROCEDURES.

D. TEMPORARY PROVISIONS ARE TO REMAIN IN SERVICE WHILE PROPOSED WORK, INCLUDING POWER, CONTROLS, SCADA AND COMMUNICATIONS, IS TESTED AND ACCEPTED.

KGI Kalluri Group, Inc.
TBPE Registration No. F-665
16300 Katy Freeway, Suite 172
Houston, Texas 77094
Phone: (713)-365-9288
PROJECT 4285

QUIDDITY
Texas Board of Professional Engineers and Land Surveyors Reg. No. F-23290
6330 West Loop South, Suite 150 • Bellaire, TX 77401 • 713.777.5337

JOB NO: 00050-0099-01 DATE: 5/7/2026

APPROVED BY: RK

DATE: 05/2026

DESIGNED BY: SLJ

DRAWN BY: RHW

SURVEYED BY: WESTERN GROUP CONSULTANTS
FB NO. P-6414

STATE OF TEXAS
STACY L. JORDAN
148233
LICENSED
PROFESSIONAL ENGINEER
05.12.2026

CITY OF HOUSTON
HOUSTON PUBLIC WORKS

SCOTT STREET NO. 1 LIFT STATION REHABILITATION

ELECTRICAL

ODOR CONTROL SYSTEM ENLARGED PLAN - PROPOSED

WBS NUMBER	FOR CITY OF HOUSTON USE ONLY
R-000267-127A-4	
DRAWING SCALE	
AS NOTED	
CITY OF HOUSTON PM	
TAHA LOTIA	
DWG NO. 5-E-01	
SHEET NO. 162 OF 220	

D:\Kalluri Group, Inc\KGI - Documents\4285-QEL (Scott Street LS)\Drawings\Electrical\0-E-04 -10 -11 Electrical Site Plans.dwg

ORIGINAL SCALE IN INCHES FOR REDUCED PLANS

NO.	DATE	REVISIONS	APP.

NEW PANELBOARD "H-OC" IS TO BE LOCATED ON THE ODOR CONTROL AREA EQUIPMENT RACK

PANEL "H-OC"

BUS AMPS 225
MAIN BRKR. AMPS 200
VOLTS 480 KAIC 35
PHASE 3 WIRE 3

NOTES
1. ALL BUSS SHALL BE COPPER.
2. BREAKERS 3P/20A UNLESS MARKED OTHERWISE
3. ADJ. CKTS. TO BAL. PNL.
4. SURFACE MOUNT, NEMA 1 PANEL INSIDE A HINGED DOOR NEMA 4X 316 STAINLESS STEEL ENCLOSURE

200

	CKT. DESCRIPTION	WIRE	LOAD	BKR.			BKR.	LOAD	WIRE	CKT. DESCRIPTION	
2	ODOR CONTROL BLOWER SKID 1	6 6 6	33,255	70	1 3 5	2 4 6	70	33,255	6 6 6	ODOR CONTROL BLOWER SKID 2	2
2	NUTRIENT BOOSTER PUMP 1	10 10 10	6,319	20	7 9 11	8 10 12	20	6,319	10 10 10	NUTRIENT BOOSTER PUMP 2	2
2	FLOW CONTROL VALVE 1	12 12 12	1,746	15	13 15 17	14 16 18	15	1,746	12 12 12	FLOW CONTROL VALVE 2	2
	SPARE			70	19 21 23	20 22 24	70			SPARE	
	SPARE			20	25 27 29	26 28 30	20			SPARE	
	SPARE			15	43 45 47	44 46 48	15			SPARE	
	T-OC PANEL L-OC	8 8	8,352	50	49 51	50 52	50			SPARE	
	SPACE				53	54				SPACE	
			46,672					41,320			

TOTAL VA = 87,992
88 KVA AT 480V = 106 AMPS
THE CONDUCTORS, PANEL, AND MAIN BREAKER ARE ALL RATED PROPERLY TO SERVE THE CONNECTED LOAD

NEW MPC-OC "L-OC" IS TO BE LOCATED ON THE ODOR CONTROL AREA EQUIPMENT RACK

PANEL "L-OC"

MAIN BRKR. AMPS 80
TRANSFORMER 15KVA
VOLTS 120/240 AIC 18 KA
PHASE 1 WIRE 2 SN √

NOTES
1. ALL BUSS SHALL BE COPPER.
2. BOLT IN BREAKERS ONLY.
3. SURFACE MOUNT, NEMA 3R SS
4. INSTALL MINI POWER CENTER WITH PANEL COVER HINGE AT 72" AFF.

45
80

CKT. DESCRIPTION	WIRE	LOAD	BKR.			BKR.	LOAD	WIRE	CKT. DESCRIPTION	
PUMP SHELTER LIGHTS & FAN	12	100	20	1	2	20	200	12	ODOR CONTROL CONTROL PANEL	
PUMP SHELTER INTERIOR RECEP	12	360	20	3	4	20	180	12	OC CP RACK RECEP	
METERING PUMP 1	12	1,656	20	5	6	20	180	12	BLOWER CP RACK RECEP	
METERING PUMP 2	12	1,656	20	7	8	20	180	12	FLOW CNTRL VALVE RECEP	
CHEMICAL TANK 1 INST & VLV	12	200	20	9	10	20	180	12	CHEM TANK FILL PANEL	1
CHEMICAL TANK 2 INST & VLV	12	200	20	11	12	20	180	12	NUTRIENT AREA RECEP	
CHEMICAL TANK 3 INST & VLV	12	200	20	13	14	20	360	12	ESEW-1 HEAT TRACE	
SPARE			20	15	16	20	360	12	ESEW-2 HEAT TRACE	
SPARE			20	17	18	20			SPARE	
SPARE			20	19	20	20			SPARE	
SPARE			20	21	22	20			SPARE	
SPARE			30	23	24	20			SPARE	
				25	26					
		4,372		NEUT	GND		1,820			

TOTAL VA = 6,192
6.192 KVA AT 240V = 25.8 AMPS
THE CONDUCTORS, PANEL, AND MAIN BREAKER ARE ALL RATED PROPERLY TO SERVE THE LOAD

ODOR CONTROL AREA PANELBOARD
SCHEDULES
NTS

KEYED NOTES:

1. EACH BREAKER SHALL BE A GFCI RATED BREAKER.
2. EACH BREAKER SHALL BE COORDINATED TO THE PROPOSED EQUIPMENT AND MCP RATED.
3. EQUIPMENT RACK SHALL BE SIZED TO SUPPORT THE ODOR CONTROL TERMINATION CABINET, THE MINI-POWER CENTER AND THE 480 VOLT PANEL BOARD.
4. CONDUITS SHALL NOT ENTER THE TOP OF ANY OUTDOOR ENCLOSURE.

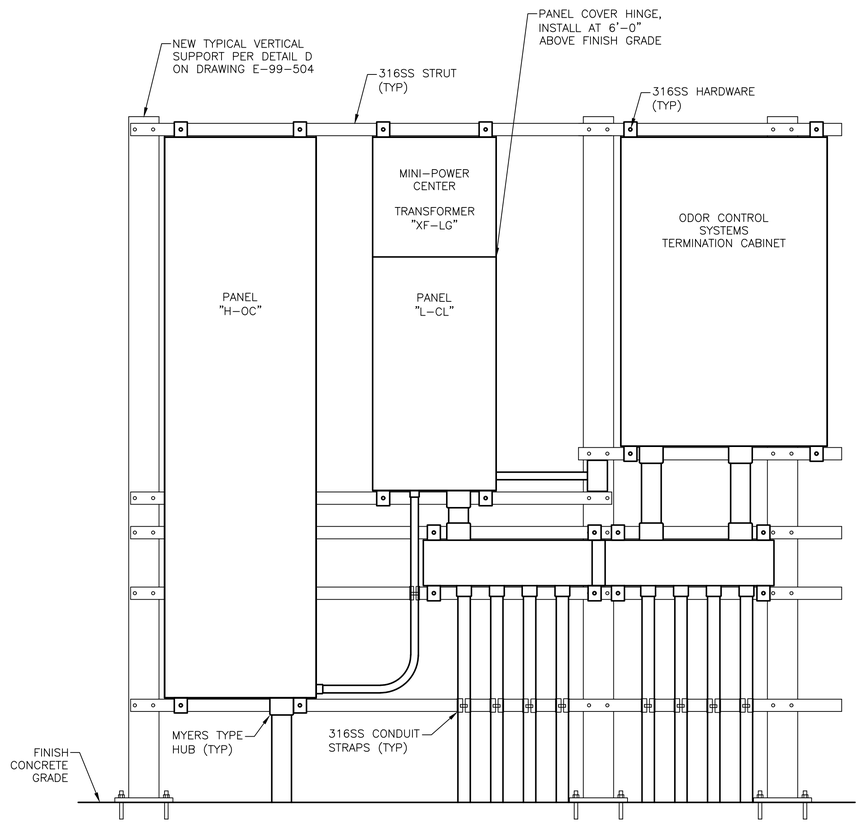

3 ODOR CONTROL AREA EQUIPMENT RACK
ELEVATION
NTS

GENERAL NOTES:

A. THIS DRAWING IS PROVIDED TO ILLUSTRATE THE ODOR CONTROL AREA ELECTRICAL RACK AND PANELBOARD SCHEDULES.

B. CONDUITS REQUIRED MAY NOT BE ILLUSTRATED ON ALL DRAWINGS SHOWING AN AREA. REFER TO THE CONDUIT AND CONDUCTOR SCHEDULES FOR MORE INFORMATION.

KGI Kalluri Group, Inc.
TBPE Registration No. F-665
16300 Katy Freeway, Suite 172
Houston, Texas 77094
Phone: (713)-365-9288
PROJECT 4285

QUIDDITY
Texas Board of Professional Engineers and Land Surveyors Reg. No. F-23290
6330 West Loop South, Suite 150 • Bellaire, TX 77401 • 713.777.5337

JOB NO: 00050-0099-01 DATE: 5/7/2026

APPROVED BY: RK
DATE: 05/2026
DESIGNED BY: SLJ
DRAWN BY: RHW
SURVEYED BY: WESTERN GROUP CONSULTANTS
FB NO. P-6414

STATE OF TEXAS
STACY L. JORDAN
148233
LICENSED PROFESSIONAL ENGINEER
06.12.2026

CITY OF HOUSTON
HOUSTON PUBLIC WORKS

SCOTT STREET NO. 1 LIFT STATION REHABILITATION
ELECTRICAL
ODOR CONTROL AREA EQUIPMENT RACK & SCHEDULES - PROPOSED

WBS NUMBER	FOR CITY OF HOUSTON USE ONLY
R-000267-127A-4	
DRAWING SCALE	
AS NOTED	
CITY OF HOUSTON PM	
TAHA LOTIA	
DWG NO. 5-E-11	
SHEET NO. 163 OF 220	

F:\Users\KGI-StacyJordan\Kalluri Group, Inc\KGI - Documents\4285-QEL (Scott Street LS)\Drawings\Electrical\5-E-11 Odor Control Equipment Rack & Schedules - Proposed.dwg

0 1 2 3 4 5 ORIGINAL SCALE IN INCHES FOR REDUCED PLANS

NO.	DATE	REVISIONS	APP.

DUCT BANK CONDUITS

1	100	101	107	GEN-C		
2	101	107	SL-S	GEN-C		
3	104	003				
4	008	DWP1-P	DWP2-P	DWP3-P	DWP4-P	
	009	DWP1-M	DWP2-M	DWP3-M	DWP4-M	
	004	SL-E	SL-W	H-OC-P		

SOME CONDUIT TAGS REPRESENT MULTIPLE CONDUITS, IN THE DUCT BANK, SEE CONDUIT SCHEDULES FOR COMPLETE TAGGING INFORMATION

1" = 5'
2.5 0 5

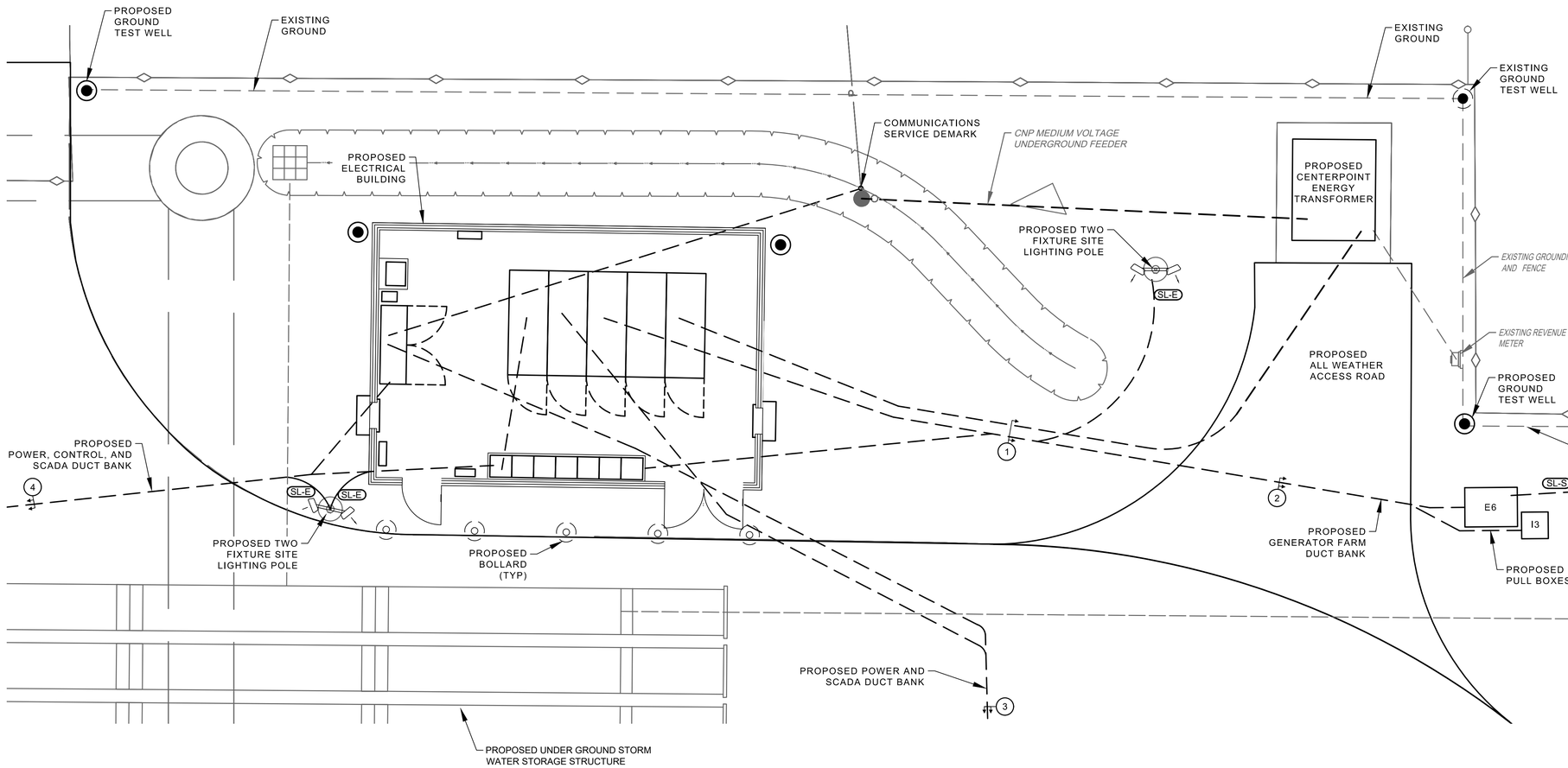

PROPOSED ELECTRICAL BUILDING AREA

PLAN

1" = 5'-0"

GENERAL NOTES:

A. THIS DRAWING ILLUSTRATES THE PROPOSED ELECTRICAL BUILDING AREA ENLARGED. SEE DIVISION 13 AND 16 SPECIFICATIONS FOR ALL PROPOSED WORK AND EQUIPMENT REQUIREMENTS.

B. CONTRACTOR HAS TASKS, IN THIS PROJECT, IN NEAR PROXIMITY TO CPE OVERHEAD POWER LINES. CONTRACTOR SHALL FOLLOW NEC AND CPE STANDARDS FOR SAFE WORKING DISTANCE, TEMPORARY SIGNAGE AND PROCEDURES.

C. TEMPORARY PROVISIONS ARE TO REMAIN IN SERVICE WHILE PROPOSED WORK, INCLUDING POWER, CONTROLS, SCADA AND COMMUNICATIONS, IS TESTED AND ACCEPTED.

KGI Kalluri Group, Inc.
TBPE Registration No. F-665
16300 Katy Freeway, Suite 172
Houston, Texas 77094
Phone: (713)-365-9288
PROJECT 4285

QUIDDITY
Texas Board of Professional Engineers and Land Surveyors Reg. No. F-23290
6330 West Loop South, Suite 150 • Bellaire, TX 77401 • 713.777.5337

JOB NO: 00050-0099-01 DATE: 5/7/2026

APPROVED BY: RK

DATE: 05/2026

DESIGNED BY: SLJ

DRAWN BY: RHW

SURVEYED BY: WESTERN GROUP CONSULTANTS
FB NO. P-6414

STATE OF TEXAS
STACY L. JORDAN
148233
LICENSED
PROFESSIONAL ENGINEER
05.12.2026

CITY OF HOUSTON
HOUSTON PUBLIC WORKS

SCOTT STREET NO. 1 LIFT STATION REHABILITATION
ELECTRICAL
ELECTRICAL BUILDING AREA PLAN - PROPOSED

WBS NUMBER	FOR CITY OF HOUSTON USE ONLY
R-000267-127A-4	
DRAWING SCALE	
AS NOTED	
CITY OF HOUSTON PM	
TAHA LOTIA	
DWG NO. 6-E-01	
SHEET NO. 164 OF 220	

D:\Kalluri Group, Inc\KGI - Documents\4285-QEL (Scott Street LS)\Drawings\Electrical\0-E-04 -10 -11 Electrical Site Plans.dwg

ORIGINAL SCALE IN INCHES FOR REDUCED PLANS

NO.	DATE	REVISIONS	APP.

EQUIPMENT	WEIGHT & HEAT LOAD	
480 MAIN SWITCHGEAR – 6 SECTIONS	= 680LB EACH	= 1.7KW EACH
480 MCC–1	= 500LB	= 1.4KW
SCADA CONTROL PANEL	= 800LB	= 420W
SCADA CP UPS	= 130LB	= 250W
480V PANEL	= 100LB EACH	= 200W
240/120V PANEL	= 100LB	= 100W
LIGHTING PKG & CONTROL PANEL	= 230LB	= 280W
.	.	.
.	.	.

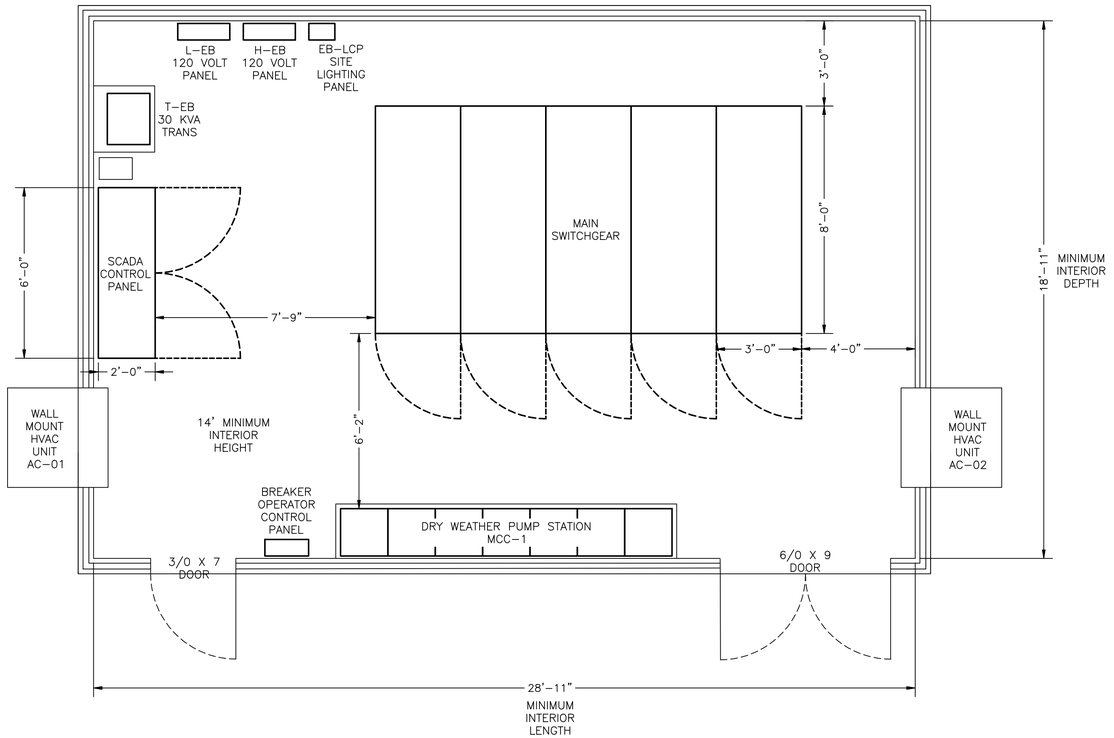

ELECTRICAL BUILDING EQUIPMENT

PLAN

3/8" = 1'-0"

GENERAL NOTES:

A. THIS DRAWING IS PROVIDED TO ILLUSTRATE THE PROPOSED ELECTRICAL BUILDING, PROVIDE DIMENSIONS, EQUIPMENT LOCATION AND LAYOUT MINIMUM CLEARANCE REQUIRED.

B. THE ELECTRICAL BUILDING SHALL BE PROVIDED IN ACCORDANCE WITH SPECIFICATIONS AND ALL APPLICABLE AUTHORITIES HAVING JURISDICTION.

KGI Kalluri Group, Inc.

TBPE Registration No. F–665
16300 Katy Freeway, Suite 172
Houston, Texas 77094
Phone: (713)–365–9288
PROJECT 4285

QUIDDITY
Texas Board of Professional Engineers and Land Surveyors Reg. No. F-23290
6330 West Loop South, Suite 150 • Bellaire, TX 77401 • 713.777.5337

JOB NO: 00050–0099–01 DATE: 5/7/2026

APPROVED BY: RK

DATE: 05/2026

DESIGNED BY: SLJ

DRAWN BY: RHW

SURVEYED BY: WESTERN GROUP CONSULTANTS
FB NO. P–6414

STATE OF TEXAS
STACY L. JORDAN
148233
LICENSED
PROFESSIONAL ENGINEER
05.12.2026

CITY OF HOUSTON
HOUSTON PUBLIC WORKS

SCOTT STREET NO. 1 LIFT STATION REHABILITATION

ELECTRICAL

ELECTRICAL BUILDING EQUIPMENT PLAN - PROPOSED

WBS NUMBER	FOR CITY OF HOUSTON USE ONLY
R–000267–127A–4	
DRAWING SCALE	
AS NOTED	
CITY OF HOUSTON PM	
TAHA LOTIA	
DWG NO. 6–E–02	
SHEET NO. 165 OF 220	

F:\Users\KGI-StacyJordan\Kalluri Group, Inc\KGI - Documents\4285-QEL (Scott Street LS)\Drawings\Electrical\6-E-02 - 04 Electrical Building Plans - Proposed.dwg

0 1 2 3 4 5 ORIGINAL SCALE IN INCHES FOR REDUCED PLANS

NO.	DATE	REVISIONS	APP.

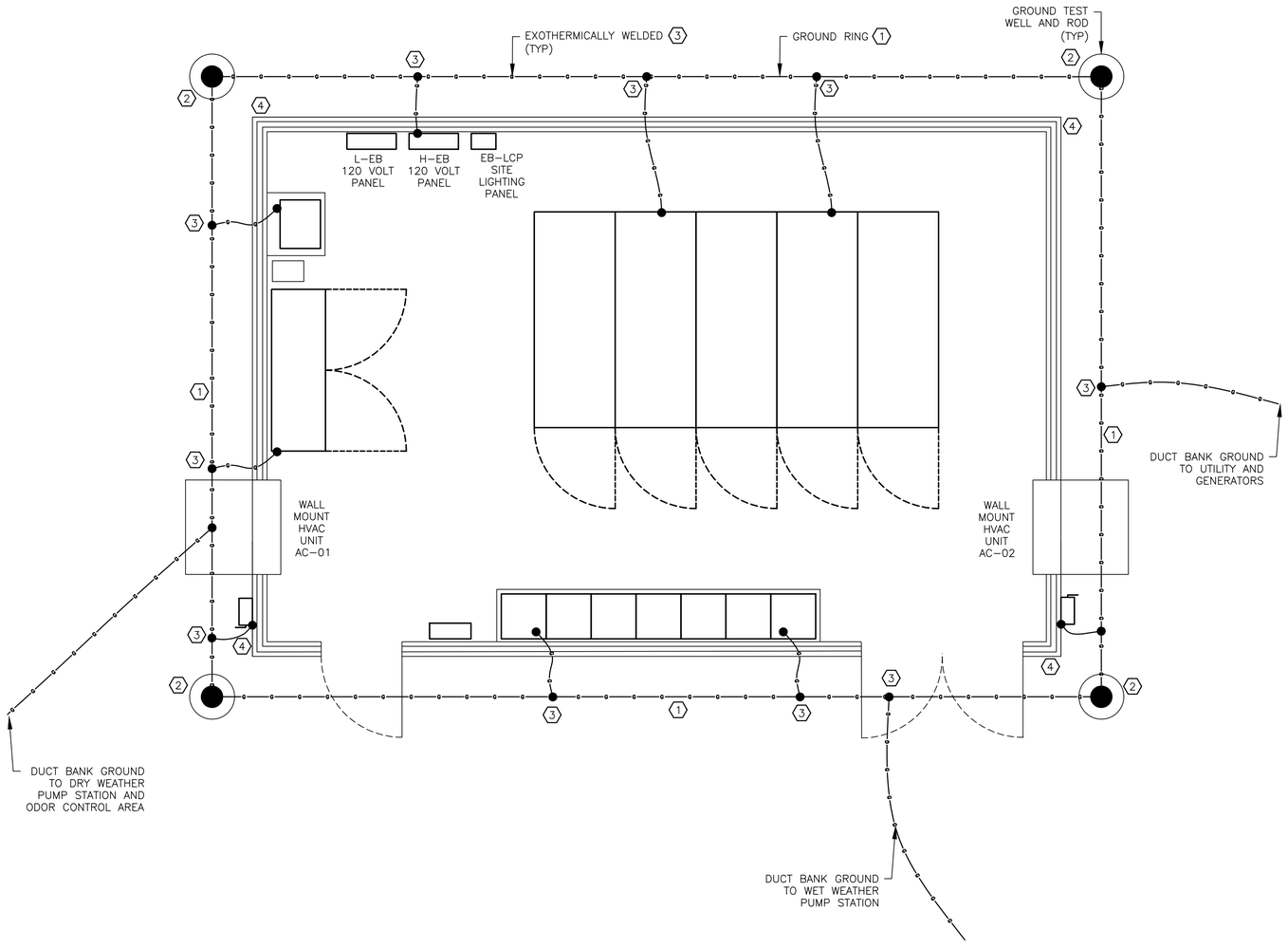

ELECTRICAL BUILDING GROUNDING

PLAN

3/8" = 1'-0"

KEYED NOTES:

1. 4/0 COPPER GROUND RING AT 24" MINIMUM BELOW GRADE.
2. 3/4"X20' GROUND ROD WITH EXOTHERMIC CONNECTIONS TO GROUND RING.
3. EXOTHERMICALLY WELDED CONNECTION, SEE SPECIFICATIONS FOR REQUIREMENTS.
4. PROVIDE ONE 1" PVC CONDUIT DOWN THE EXTERIOR OF EACH WALL, OF THE PROPOSED BUILDING. PROVIDE CONDUIT FROM 12" BELOW TOP OF THE WALL TO 12 INCHES BELOW GRADE. CONNECT GROUND CONDUCTOR TO GROUND RING FOR LIGHTNING PROTECTION DOWN LEAD.

GENERAL NOTES:

A. THIS DRAWING IS PROVIDED TO ILLUSTRATE THE NEW ELECTRICAL BUILDING GROUNDING, AND UNDER SLAB PROVISIONS.

B. ALL ELECTRICAL EQUIPMENT, STEEL RACKS, FOUNDATION REBAR AND FENCING ON THE SITE SHALL BE CONNECTED THROUGH THE DUCT BANK GROUND SYSTEM.

KGI Kalluri Group, Inc.
TBPE Registration No. F-665
16300 Katy Freeway, Suite 172
Houston, Texas 77094
Phone: (713)-365-9288
PROJECT 4285

QUIDDITY
Texas Board of Professional Engineers and Land Surveyors Reg. No. F-23290
6330 West Loop South, Suite 150 • Bellaire, TX 77401 • 713.777.5337

JOB NO: 00050-0099-01 DATE: 5/7/2026

APPROVED BY: RK

DATE: 05/2026

DESIGNED BY: SLJ

DRAWN BY: RHW

SURVEYED BY: WESTERN GROUP CONSULTANTS
FB NO. P-6414

STATE OF TEXAS
STACY L. JORDAN
148233
LICENSED
PROFESSIONAL ENGINEER
06.12.2026

CITY OF HOUSTON
HOUSTON PUBLIC WORKS

SCOTT STREET NO. 1
LIFT STATION REHABILITATION
ELECTRICAL
ELECTRICAL BUILDING GROUNDING PLAN - PROPOSED

WBS NUMBER
R-000267-127A-4
DRAWING SCALE
AS NOTED
CITY OF HOUSTON PM
TAHA LOTIA
DWG NO. 6-E-03
SHEET NO. 166 OF 220

FOR CITY OF HOUSTON USE ONLY

F:\Users\KGI-Stacy\Jordan\Kalluri Group, Inc\KGI - Documents\4285-QEL (Scott Street LS)\Drawings\Electrical\6-E-02 - 04 Electrical Building Plans - Proposed.dwg

NO.	DATE	REVISIONS	APP.

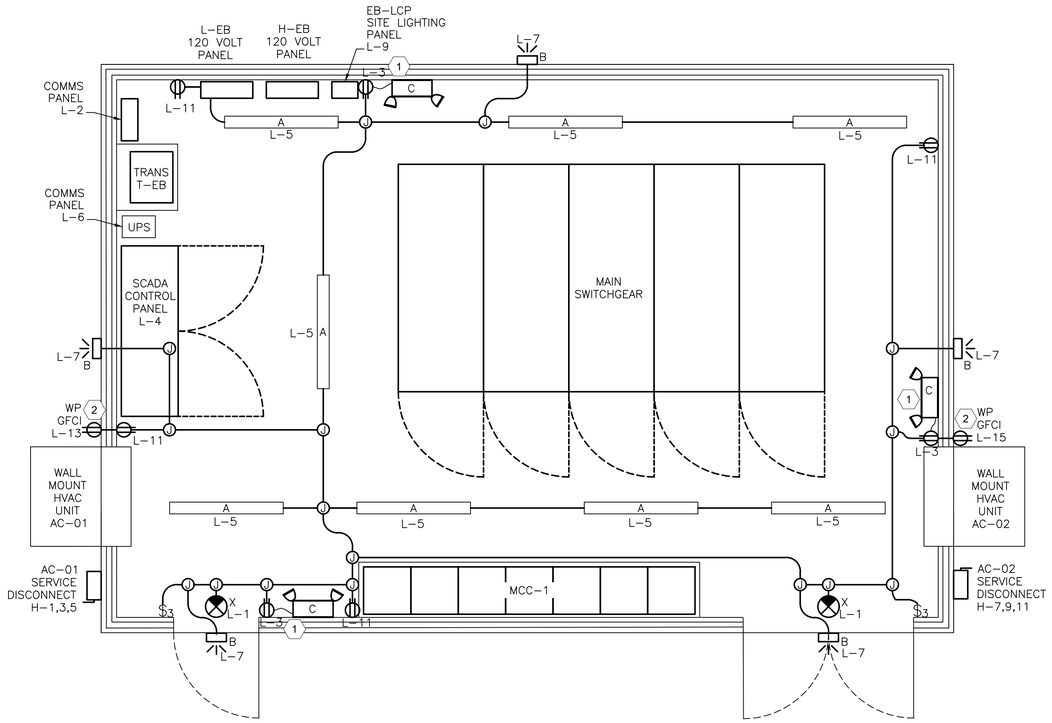

ELECTRICAL BUILDING LIGHTING & POWER

PLAN

3/8" = 1'-0"

KEYED NOTES:

1. EMERGENCY FIXTURES AND THE DEDICATED RECEPTACLE SHALL BE INSTALLED 9'-0"ABOVE FINISH FLOOR, AND BE CORD CONNECTED.
2. INSTALL OUTDOOR RECEPTACLES AT 4'-0" ABOVE EXTERIOR GRADE. SEE GENERAL NOTES FOR IN-USE COVER.

GENERAL NOTES:

A. ROUTE CONDUITS UNDERGROUND IF POSSIBLE. IF CONDUITS MUST BE ROUTED OVERHEAD, ROUTE CONDUITS ON STRUT, ATTACHED TO STRUCTURE OR ON TRAPEZE TYPE HANGERS.

B. ALL ANCHORS, STRUT, STRUT FITTINGS, STRAPS AND HARDWARE SHALL BE 316 STAINLESS STEEL.

C. PROVIDE NEMA 4X, 316SS ENCLOSED, FUSED DISCONNECTS FOR THE A/C UNITS. COORDINATE EXACT FUSE SIZE WITH PROPOSED EQUIPMENT. A/C UNIT FEEDERS MAY BE ROUTED UNDER THE SLAB.

D. PROVIDE CONDUIT AND PULL STRING FOR HVAC THERMOSTATS, COORDINATE LOCATIONS WITH HVAC.

E. SEE LIGHT FIXTURE SCHEDULE FOR LIGHT FIXTURE CATALOG NUMBERS, FIXTURE DESCRIPTIONS AND INSTALLATION INSTRUCTIONS. SEE 0-E-21 FOR LIGHTING CONTROL REQUIREMENTS.

F. ROUTE CONDUIT SUCH THAT THERE ARE NO CONNECTIONS IN CONDUIT FITTINGS. IF CONNECTIONS ARE REQUIRED A BOX SIZED ACCORDINGLY SHALL BE PROVIDED.

G. PROVIDE RED DOT "CODE KEEPER TYPE (OR APPROVED EQUAL) METALLIC "IN-USE" GFCI COVER, INSTALLED AT 2'-0" FINISHED FLOOR.

H. INSTALL RECEPTACLES 2'-0" ABOVE FINISHED FLOOR OR FINISHED GRADE. INSTALL LIGHT SWITCHES 3'-6" ABOVE FINISHED FLOOR.

KGI Kalluri Group, Inc.
TBPE Registration No. F-665
16300 Katy Freeway, Suite 172
Houston, Texas 77094
Phone: (713)-365-9288
PROJECT 4285

QUIDDITY
Texas Board of Professional Engineers and Land Surveyors Reg. No. F-23290
6330 West Loop South, Suite 150 • Bellaire, TX 77401 • 713.777.5337

JOB NO: 00050-0099-01 DATE: 5/7/2026

APPROVED BY: RK

DATE: 05/2026

DESIGNED BY: SLJ

DRAWN BY: RHW

SURVEYED BY: WESTERN GROUP CONSULTANTS
FB NO. P-6414

STATE OF TEXAS
STACY L. JORDAN
148233
LICENSED
PROFESSIONAL ENGINEER
06.12.2026

CITY OF HOUSTON
HOUSTON PUBLIC WORKS

SCOTT STREET NO. 1 LIFT STATION REHABILITATION
ELECTRICAL
ELECTRICAL BUILDING LIGHTING & POWER PLAN - PROPOSED

WBS NUMBER	FOR CITY OF HOUSTON USE ONLY
R-000267-127A-4	
DRAWING SCALE	
AS NOTED	
CITY OF HOUSTON PM	
TAHA LOTIA	
DWG NO. 6-E-04	
SHEET NO. 167 OF 220	

ORIGINAL SCALE IN INCHES FOR REDUCED PLANS

NO.	DATE	REVISIONS	APP.

KEYED NOTES:

1. EACH BREAKER SHALL BE A GFCI RATED BREAKER.
2. EACH BREAKER SHALL BE COORDINATED TO THE PROPOSED EQUIPMENT LOAD AND PROPERLY RATED.

GENERAL NOTES:

A. THIS DRAWING IS PROVIDED TO ILLUSTRATE THE ODOR CONTROL AREA ELECTRICAL RACK AND PANELBOARD SCHEDULES.

B. CONDUITS REQUIRED MAY NOT BE ILLUSTRATED ON ALL DRAWINGS SHOWING AN AREA. REFER TO THE CONDUIT AND CONDUCTOR SCHEDULES FOR MORE INFORMATION.

NEW PANELBOARD "H-EB" IS TO BE LOCATED IN THE PROPOSED ELECTRICAL BUILDING

PANEL "H-EB"

BUS AMPS 225
MAIN BRKR. AMPS 200
VOLTS 480 KAIC 65
PHASE 3 WIRE 3 SN NO

NOTES
1. SURFACE MOUNT
2. NEMA 1 ENCLOSURE
3. PHASE, AND GROUND BUS SHALL BE COPPER

MAIN

	CKT. DESCRIPTION	WIRE	LOAD	BKR.	A	B	C		BKR.	LOAD	WIRE	CKT. DESCRIPTION
		8			1			2	30	7,460	6	SL-S SITE LIGHTING
2	HVAC WALL UNIT #1	8	7,460	50	3			4			6	
		8			5			6	30	7,460	6	SL-E SITE LIGHTING
		8			7			8			6	
2	HVAC WALL UNIT #2	8	7,460	50	9			10	30	7,460	6	SL-W SITE LIGHTING
		8			11			12			6	
		–			13			14	30		–	
2	SPARE	–	–	50	15			16			–	SPARE
		–			17			18	70		–	
		–			19			20			–	SPARE
2	SPARE	–	–	50	21			22	70		4	TRANSFORMER T-EB
		–			23			24			4	
		–			25			26			–	
	SPARE	–	–	30	27			28	20	–	–	SPARE
		–			29			30			–	
			7,460		G					7,460		

TOTAL CONNECTED VA = 14,920
14.9 KVA = 17.95 AMPS AT 480 VOLTS
17.95 x 125% = 22.43 AMPS
THE PANEL AND FEEDER ARE
ADEQUATE FOR THE LOAD

NEW PANELBOARD "L-EB" IS TO BE LOCATED IN THE PROPOSED ELECTRICAL BUILDING

PANEL "L-EB"

BUS AMPS 150
MAIN BRKR. AMPS 100
VOLTS 120/240 KAIC 18
PHASE 3 WIRE 3 SN YES

NOTES
1. SURFACE MOUNT
2. NEMA 1 ENCLOSURE
3. PHASE, AND GROUND BUS SHALL BE COPPER

100

	CKT. DESCRIPTION	WIRE	LOAD	BKR.	A	B	C		BKR.	LOAD	WIRE	CKT. DESCRIPTION
	EB EXIT LIGHTS	12	100	20	1			2	20	682	12	COMMUNICATIONS CABINET
	EB EMERGENCY LIGHTS	12	150	20	3			4	20	1080	12	WET WEATHER SCADA PLC PANEL
	EB INTERIOR LIGHTS	12	360	20	5			6	20	1500	12	WET WEATHER PANEL UPS
	EB EXTERIOR LIGHTS	12	210	20	7			8	20	160	12	SWITCHGEAR BREAKER CONTROL PNL
	SITE LIGHTING CONTROL PANEL	12	100	20	9			10	20			SPARE
	BUILDING INTERIOR RECEPTACLES	12	720	20	11			12	20			SPARE
1	A/C 1 OUTDOOR RECEP	12	360	20	13			14	20			SPARE
	A/C 2 OUTDOOR RECEP	12	360	20	15			16	20			SPARE
	SPARE			20	17			18	20			SPARE
	SPARE			20	19			20	20			SPARE
	SPARE			20	21			22	20			SPARE
	SPARE			20	23			24	20			SPARE
	SPARE			20	25			26	20			SPARE
	SPARE			20	27			28	20			SPARE
	SPARE			20	29			30	20			SPARE
	N		2360							3422		G

TOTAL CONNECTED VA = 5,782
5.8 KVA = 17.95 AMPS AT 480 VOLTS
17.95 x 125% = 22.43 AMPS
THE PANEL AND FEEDER ARE
ADEQUATE FOR THE LOAD

KGI Kalluri Group, Inc.
TBPE Registration No. F-665
16300 Katy Freeway, Suite 172
Houston, Texas 77094
Phone: (713)-365-9288
PROJECT 4285

QUIDDITY
Texas Board of Professional Engineers and Land Surveyors Reg. No. F-23290
6330 West Loop South, Suite 150 • Bellaire, TX 77401 • 713.777.5337

JOB NO: 00050-0099-01 DATE: 5/7/2026

APPROVED BY: RK
DATE: 05/2026
DESIGNED BY: SLJ
DRAWN BY: RHW
SURVEYED BY: WESTERN GROUP CONSULTANTS
FB NO. P-6414

STATE OF TEXAS
STACY L. JORDAN
148233
LICENSED PROFESSIONAL ENGINEER
05.12.2026

CITY OF HOUSTON
HOUSTON PUBLIC WORKS

SCOTT STREET NO. 1
LIFT STATION REHABILITATION
ELECTRICAL
ELECTRICAL BUILDING SCHEDULES - PROPOSED

WBS NUMBER	FOR CITY OF HOUSTON USE ONLY
R-000267-127A-4	
DRAWING SCALE	
AS NOTED	
CITY OF HOUSTON PM	
TAHA LOTIA	
DWG NO. 6-E-10	
SHEET NO. 168 OF 220	

F:\Users\KGI-StacyJordan\Kalluri Group, Inc\KGI - Documents\4285-QEL (Scott Street LS)\Drawings\Electrical\6-E-10 & 11 MCC1 and EB Pnl Schedules - Proposed.dwg

ORIGINAL SCALE IN INCHES FOR REDUCED PLANS

NO.	DATE	REVISIONS	APP.

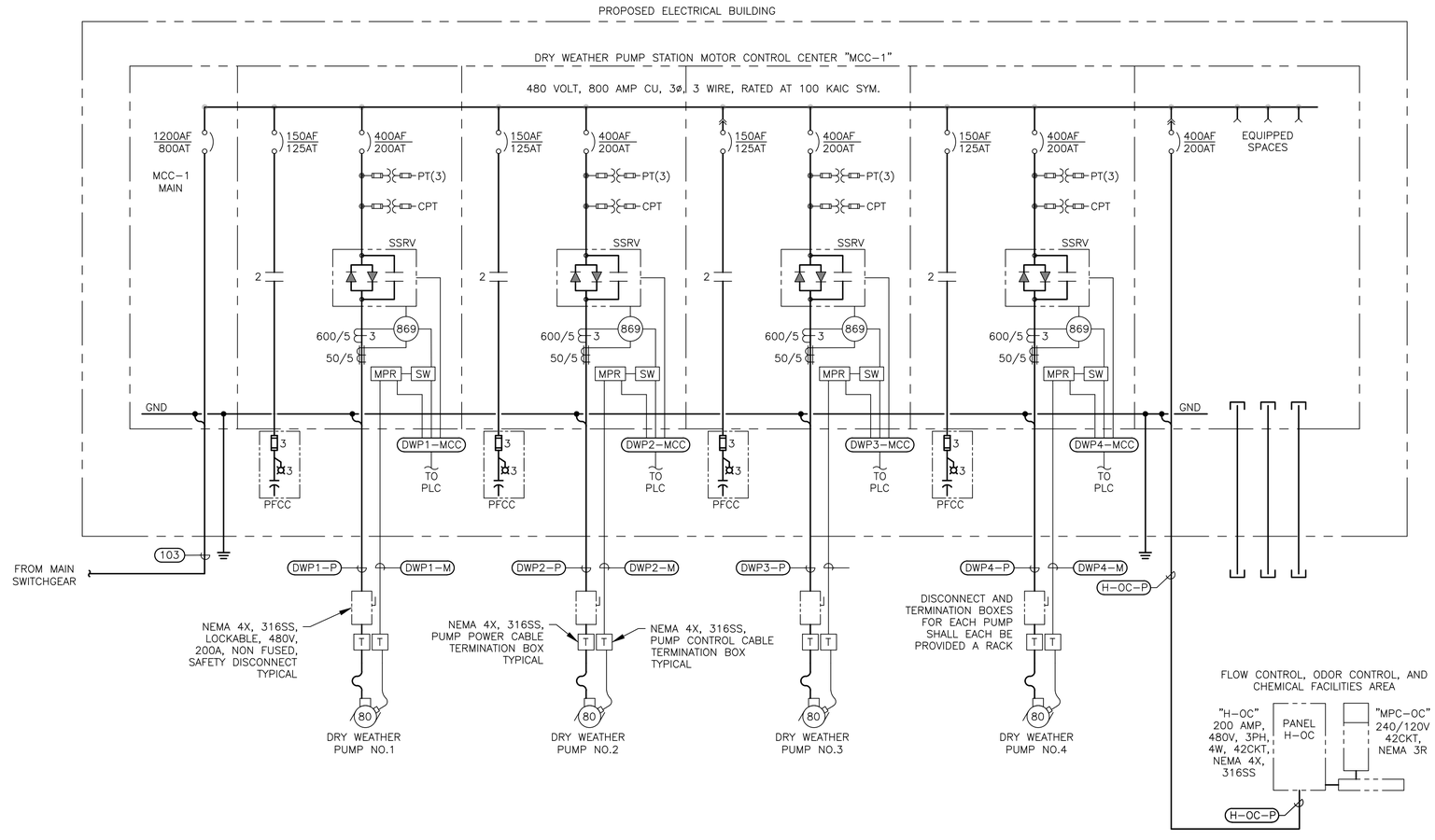

MCC1-PLC
DWP1-MCC
DWP2-MCC
DWP3-MCC
DWP4-MCC

DRY WEATHER PUMP STATION MCC-1 ONE LINE

DIAGRAM

NONE

GENERAL NOTES:

A. THIS DRAWING IS PROVIDED TO ILLUSTRATE THE DRY WEATHER PUMP STATION MCC–1.

KGI Kalluri Group, Inc.
TBPE Registration No. F–665
16300 Katy Freeway, Suite 172
Houston, Texas 77094
Phone: (713)–365–9288
PROJECT 4285

QUIDDITY
Texas Board of Professional Engineers and Land Surveyors Reg. No. F-23290
6330 West Loop South, Suite 150 • Bellaire, TX 77401 • 713.777.5337

JOB NO: 00050–0099–01 DATE: 5/7/2026

APPROVED BY: RK

DATE: 05/2026

DESIGNED BY: SLJ

DRAWN BY: RHW

SURVEYED BY: WESTERN GROUP CONSULTANTS

FB NO. P–6414

STATE OF TEXAS
STACY L. JORDAN
148233
LICENSED
PROFESSIONAL ENGINEER
06.12.2026

CITY OF HOUSTON
HOUSTON PUBLIC WORKS

SCOTT STREET NO. 1 LIFT STATION REHABILITATION

ELECTRICAL

ELECTRICAL BUILDING MCC-1 ONE LINE DIAGRAM - PROPOSED

WBS NUMBER	FOR CITY OF HOUSTON USE ONLY
R–000267–127A–4	
DRAWING SCALE	
AS NOTED	
CITY OF HOUSTON PM	
TAHA LOTIA	
DWG NO. 6–E–11	
SHEET NO. 169 OF 220	

F:\Users\KGI-StacyJordan\Kalluri Group, Inc\KGI - Documents\4285-QEL (Scott Street LS)\Drawings\Electrical\6-E-10 & 11 MCC1 and EB Pnl Schedules - Proposed.dwg

ORIGINAL SCALE IN INCHES FOR REDUCED PLANS

NO.	DATE	REVISIONS	APP.

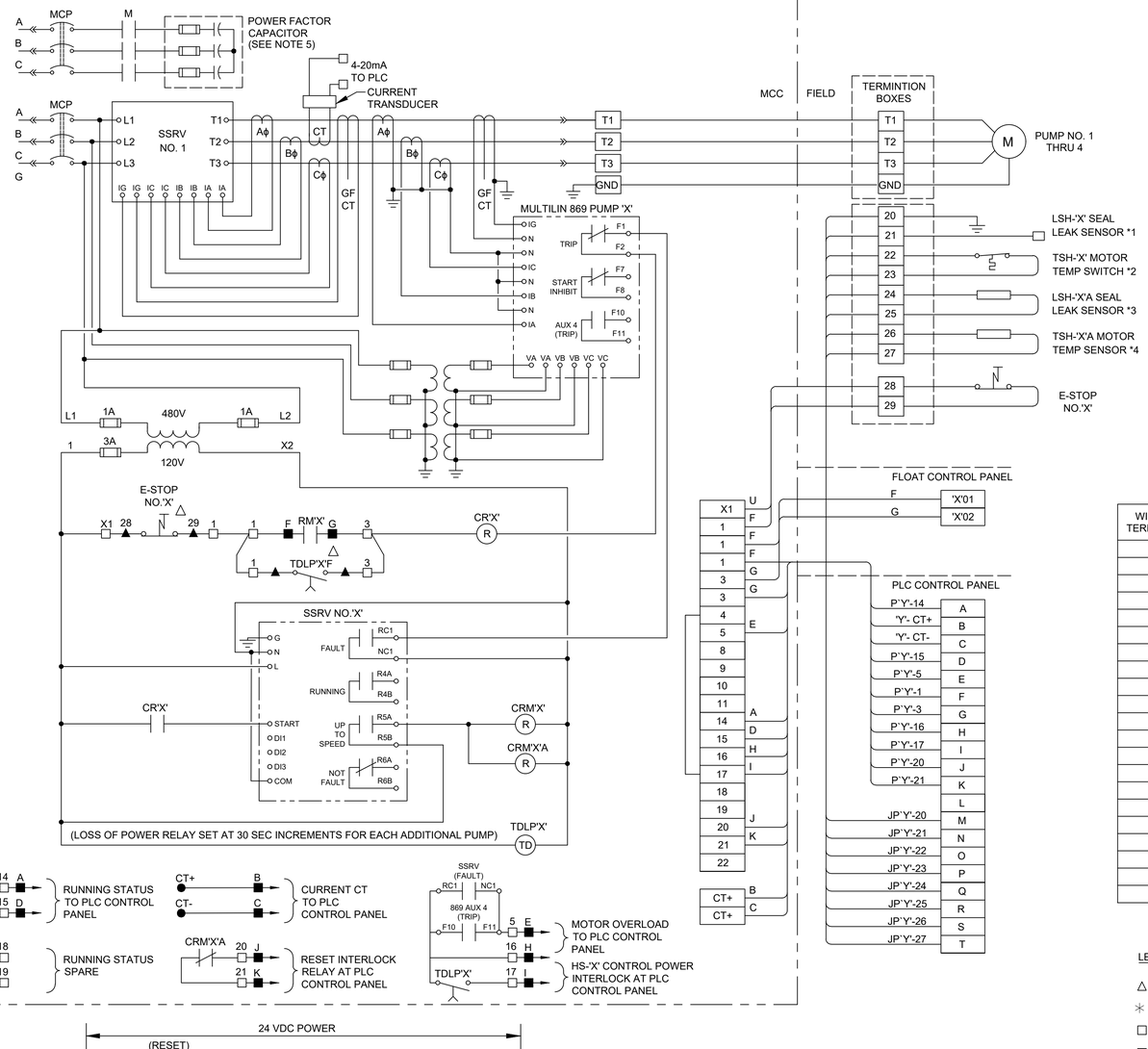

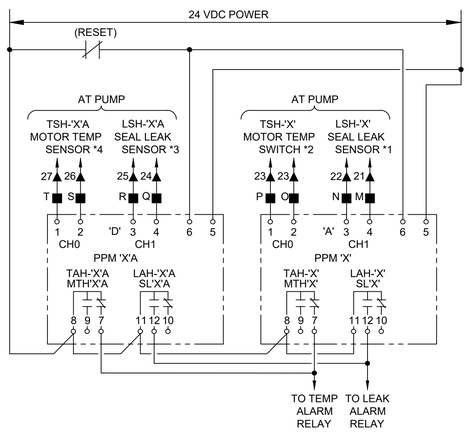

NOTES:

1. THE 'X' NOTATION IN SCHEMATIC DESIGNATIONS REPRESENTS APPLICABLE DRY WEATHER PUMP NO. 1, 2, 3, ...
2. THE 'Y' NOTATION INDICATES MCC CIRCUIT NUMBER.
3. UNLESS OTHERWISE INDICATED, ALL DEVICES WITHOUT FURTHER DESIGNATION ARE LOCATED AT THE MOTOR CONTROL CENTER (MCC).
4. MOTOR OVERLOAD RELAY OUTPUT CONTACT SHOWN IS NORMALLY CLOSED WHEN RELAY IS DE-ENERGIZED. OPEN WHEN ENERGIZED, AND CLOSED WHEN IN ALARM. (VERIFY OPERATION OF RELAY PROVIDED AND ADJUST CONNECTION OF RMOR AUXILIARY RELAYS.)
5. CONTRACTOR TO COORDINATE POWER FACTOR CORRECTION CAPACITOR SIZE WITH PUMP MANUFACTURER.

WIRE TAG OR TERMINAL LABEL	PUMP NO.1	PUMP NO.2	PUMP NO.3	PUMP NO.4	FUNCTION
A	3P1	3P2	3P3	3P4	24VDC CONTROL
B	124	224	324	424	4-20mA CURRENT TRANSDUCER
C	125	225	325	425	4-20mA CURRENT TRANSDUCER
D	112	212	312	412	RUNNING STATUS CONTACT
E	117	217	317	417	PUMP OVERLOAD ALARM
F	109	209	309	409	RUN INTERLOCK
G	110	210	310	410	RUN INTERLOCK
H	102	202	302	402	LOSS OF POWER TIMER
I	103	203	303	403	LOSS OF POWER TIMER
J	126	226	326	426	ALARM RESET INTERLOCK
K	127	227	327	427	ALARM RESET INTERLOCK
L	116	216	316	416	FLOAT SWITCH RUN INTERLOCK
M	120	220	320	420	SEAL LEAK DETECTOR
N	121	221	321	421	SEAL LEAK DETECTOR
O	122	222	322	422	MOTOR TEMPERATURE SWITCH
P	123	223	323	423	MOTOR TEMPERATURE SWITCH
Q	120A	220A	320A	420A	SEAL LEAK DETECTOR
R	121A	221A	321A	421A	SEAL LEAK DETECTOR
S	122A	222A	322A	422A	MOTOR TEMPERATURE SWITCH
T	123A	223A	323A	423A	MOTOR TEMPERATURE SWITCH
U	101	201	301	401	FIELD E-STOP INTERLOCK

LEGEND

- △ DEVICE OR FIELD TERMINAL LOCATED AT MOTOR
- ✳ DEVICE OR FIELD TERMINAL LOCATED REMOTE
- □ DEVICE OR FIELD TERMINAL LOCATED AT POWER PANEL
- ■ FIELD TERMINAL LOCATED AT CONTROL PANEL
- ▲ REMOTE TERMINAL
- ● DEVICE TERMINAL NO.
- ◆ PC INTERFACE TERMINAL

KGI Kalluri Group, Inc.
TBPE Registration No. F-665
16300 Katy Freeway, Suite 172
Houston, Texas 77094
Phone: (713)-365-9288
PROJECT 4285

QUIDDITY
Texas Board of Professional Engineers and Land Surveyors Reg. No. F-23290
6330 West Loop South, Suite 150 • Bellaire, TX 77401 • 713.777.5337

JOB NO: 00050-0099-01 DATE: 5/7/2026

APPROVED BY: RK

DATE: 05/2026

DESIGNED BY: SLJ

DRAWN BY: RHW

SURVEYED BY: WESTERN GROUP CONSULTANTS
FB NO. P-6414

STATE OF TEXAS
STACY L. JORDAN
148233
LICENSED
PROFESSIONAL ENGINEER
06.12.2026

CITY OF HOUSTON
HOUSTON PUBLIC WORKS

SCOTT STREET NO. 1 LIFT STATION REHABILITATION
ELECTRICAL

TYPICAL DRY WEATHER PUMP MCC CONTROL DIAGRAM

WBS NUMBER	FOR CITY OF HOUSTON USE ONLY
R-000267-127A-4	
DRAWING SCALE	
AS NOTED	
CITY OF HOUSTON PM	
TAHA LOTIA	
DWG NO. 6-E-12	
SHEET NO. 170 OF 220	

F:\Users\KGI-StacyJordan\Kalluri Group, Inc\KGI - Documents\4285-QEL (Scott Street LS)\Drawings\Electrical\6-E-12 Dry Weather Pump Typical MCC Control Diagram.dwg

ORIGINAL SCALE IN INCHES FOR REDUCED PLANS

NO.	DATE	REVISIONS	APP.

CONTROLLER ENCLOSURE (NEMA 12)

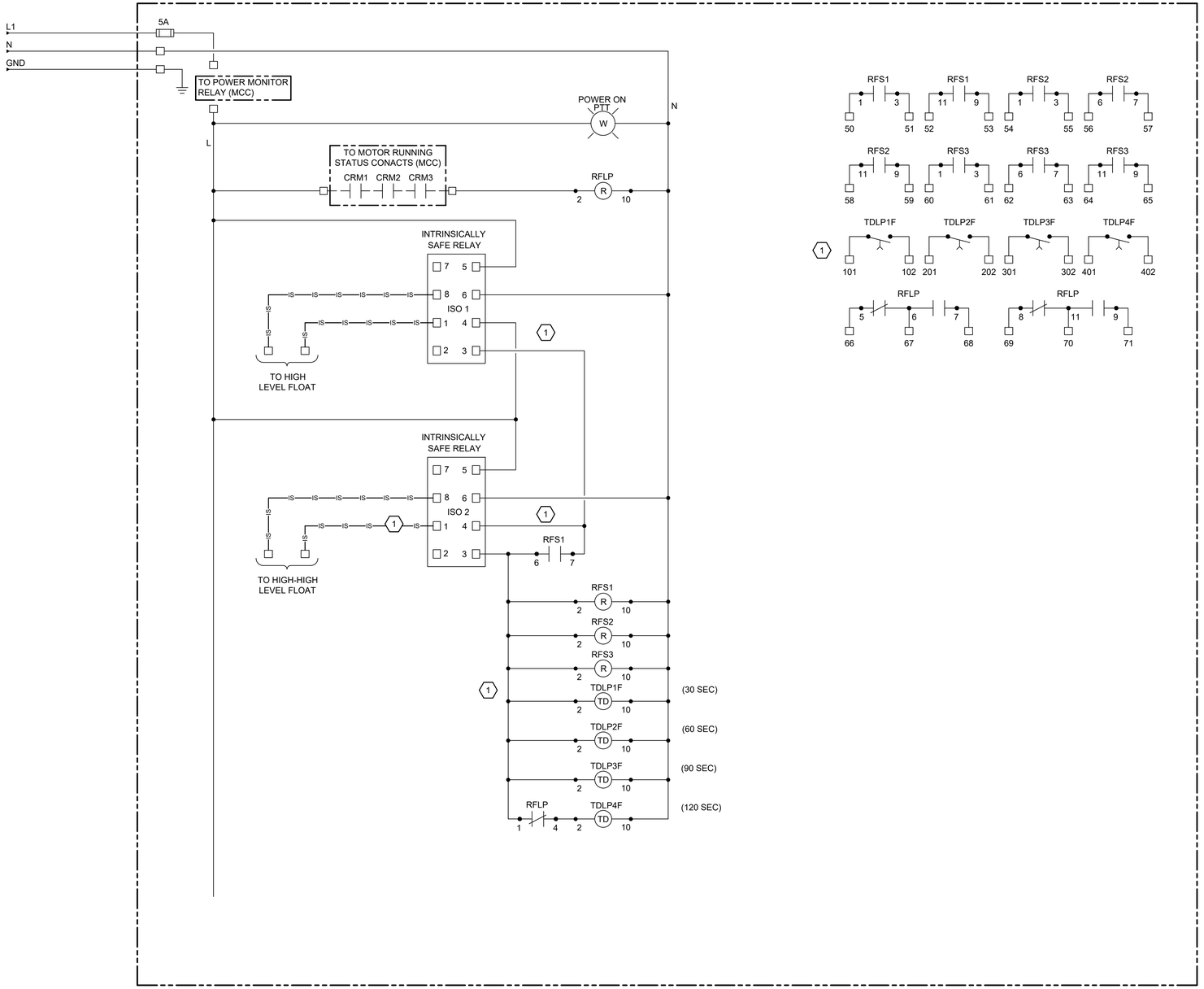

GENERAL NOTES:

A. CONTROL PANEL SHALL BE UL698A LISTED ENCLOSED INDUSTRIAL CONTROL PANEL. PANEL SHALL BE DESIGNED, CONSTRUCTED AND INSTALLED IN ACCORDANCE WITH NEC AND UL STANDARDS.

B. ALL INTRINSICALLY SAFE WIRING SHALL BE SEPARATED FROM NON-INTRINSICALLY SAFE WIRING. REFER TO NEC ARTICLE 504 FOR INSTALLATION OF INTRINSICALLY SAFE WIRING.

KEYED NOTES:

(1) ALL FLOAT CONTROL CIRCUIT CONDUCTORS SHALL HAVE YELLOW INSULATION.

LEGEND

- △ DEVICE OR FIELD TERMINAL LOCATED AT MOTOR
- ★ DEVICE OR FIELD TERMINAL LOCATED REMOTE
- □ DEVICE OR FIELD TERMINAL LOCATED AT MCC/POWER PANEL
- ■ FIELD TERMINAL LOCATED AT CONTROL PANEL
- ▲ REMOTE TERMINAL
- ● DEVICE TERMINAL NO.
- ◆ PLC INTERFACE TERMINAL

BACKUP FLOAT CONTROLLER SCHEMATIC

DIAGRAM

NONE

KGI Kalluri Group, Inc.
TBPE Registration No. F-665
16300 Katy Freeway, Suite 172
Houston, Texas 77094
Phone: (713)-365-9288
PROJECT 4285

QUIDDITY
Texas Board of Professional Engineers and Land Surveyors Reg. No. F-23290
6330 West Loop South, Suite 150 • Bellaire, TX 77401 • 713.777.5337

JOB NO: 00050-0099-01 DATE: 5/7/2026

APPROVED BY: RK

DATE: 05/2026

DESIGNED BY: SLJ

DRAWN BY: RHW

SURVEYED BY: WESTERN GROUP CONSULTANTS
FB NO. P-6414

STATE OF TEXAS
STACY L. JORDAN
148233
LICENSED PROFESSIONAL ENGINEER
06.12.2026

CITY OF HOUSTON
HOUSTON PUBLIC WORKS

SCOTT STREET NO. 1 LIFT STATION REHABILITATION
ELECTRICAL
DRY WEATHER BACKUP FLOAT CONTROL PANEL SCHEMATIC DIAGRAM

WBS NUMBER
R-000267-127A-4

FOR CITY OF HOUSTON USE ONLY

DRAWING SCALE
AS NOTED

CITY OF HOUSTON PM
TAHA LOTIA

DWG NO. 6-E-13

SHEET NO. 171 OF 220

F:\Users\KGI-StacyJordan\Kalluri Group, Inc\KGI - Documents\4285-QEL (Scott Street LS)\Drawings\Electrical\6-E-13 Dry Weather Backup Float Control Schematic Diagram.dwg

0 1 2 3 4 5 ORIGINAL SCALE IN INCHES FOR REDUCED PLANS

DUCTWORK SYMBOLS

- SUPPLY DIFFUSER/GRILLE
- RETURN GRILLE
- EXHAUST GRILLE
- 12" DIA. — ROUND DUCT. SIZE IN INCHES. SIZE INDICATED IS DUCT DIAMETER.
- 24x12 — RECTANGULAR DUCT. SIZE IN INCHES. FIRST NUMBER IS SIDE SHOWN.
- 20x12 — SUPPLY OR OUTSIDE AIR DUCT UP
- 20x12 — SUPPLY OR OUTSIDE AIR DUCT DOWN
- 20x12 — RETURN DUCT UP
- 20x12 — RETURN DUCT DOWN
- 20x12 — EXHAUST DUCT UP
- 20x12 — EXHAUST DUCT DOWN
- ROUND DUCT UP
- ROUND DUCT DOWN
- RECTANGULAR ELBOW WITH TURNING VANES
- 20x12 / 16x8 — TRANSITION – RECTANGULAR TO RECTANGULAR
- 20x12 / 10" — TRANSITION – RECTANGULAR TO ROUND
- UP — ELEVATION CHANGE (UP) RISE, (DN) DROP
- FLEXIBLE CONNECTION
- FLEXIBLE DUCT – SINGLE LINE
- DIFFUSER TAKEOFF WITH FLARED SPIN-IN TAP, MANUAL DAMPER AND FLEX DUCT
- RECTANGULAR DUCT BRANCH TAKEOFF WITH 45 DEG TAP
- ROUND DUCT BRANCH TAKEOFF WITH CONICAL TAP FROM RECT. OR ROUND MAIN

HVAC SYMBOLS

- DPT — DIFFERENTIAL PRESSURE TRANSMITTER
- DX — DIRECT EXPANSION (REFRIGERANT)
- ES — END SWITCH (DAMPER MOTOR)
- FS — FLOW SENSOR
- FS — FLOW SWITCH
- GUI — GRAPHICAL USER INTERFACE
- H — HUMIDISTAT
- H — HUMIDITY SENSOR
- HOA — HAND-OFF-AUTO SWITCH
- M — MOTORIZED OPPOSED BLADE DAMPER
- MCP — MANUFACTURER'S CONTROL PANEL
- PT — PRESSURE TRANSMITTER
- PRESSURE TEMPERATURE PORT
- SD — DUCT MOUNTED SMOKE DETECTOR
- S/D — COMBINATION STARTER/DISCONNECT
- SP — DUCT STATIC PRESSURE SENSOR
- T — TEMPERATURE SENSOR/TRANSMITTER
- TC — TEMPERATURE CONTROLLER
- TS — TEMPERATURE SENSOR/TRANSMITTER
- T — THERMOSTAT
- C — CURRENT SWITCH
- VFD — VARIABLE FREQUENCY DRIVE
- CONNECTION POINT NEW TO EXISTING
- FORCED AIR TO SPACE
- INDIRECT AIR FROM SPACE

GENERAL ABBREVIATIONS

A	@	AT
	AD	AIR DROP
	AFF	ABOVE FINISHED FLOOR
	ALT	ALTITUDE
	AP	ACCESS PANEL
	ASD	ADJUSTABLE SPEED DRIVE
	AUTO	AUTOMATIC
	AUX	AUXILIARY
	AVG	AVERAGE
B	BDD	BACKDRAFT DAMPER
	BHP	BRAKE HORSEPOWER
	BLDG	BUILDING
	BOD	BOTTOM OF DUCT
	BOP	BOTTOM OF PIPE
	BTM	BOTTOM
	BTU	BRITISH THERMAL UNIT
C	℄	CENTER LINE
	CCW	COUNTER CLOCKWISE
	CENT	CENTRIFUGAL
	CFM	CUBIC FEET PER MINUTE
	CLASS/DIV	NEC AREA CLASSIFICATION
	CLG	CEILING
	CLR	CLEAR
	COL	COLUMN
	CONT	CONTINUE, CONTINUOUS
	CTR	CENTER
	CU FT	CUBIC FEET
	CW	CLOCKWISE
D	DACS	DATA ACQUISITION AND CONTROL SYSTEM
I	DB	DRY BULB
	DCVBP	DOUBLE CHECK VALVE BACKFLOW PREVENTER
K	DEG	DEGREE
	DIA, ø	DIAMETER
L	DN	DOWN
	DWG	DRAWING
E	EA	EACH
M	EL	ELEVATION
	EMERG	EMERGENCY
	ENT	ENTERING
	EQUIP	EQUIPMENT
	EWT	ENTERING WATER TEMPERATURE
F	F	FAHRENHEIT
	FLR	FLOOR
	FLG	FLANGE
	FL	FLOW LINE
	FOB	FLAT ON BOTTOM
	FPC	FIRE PROTECTION CONTRACTOR
	FPS	FEET PER SECOND
	FT	FEET
	FWE	FURNISHED WITH EQUIPMENT
G	GPM	GALLONS PER MINUTE
H	H-O-A	HAND-OFF-AUTO
	HP	HORSEPOWER
	HVAC	HEATING, VENTILATION AND AIR CONDITIONING
	HZ	HERTZ
	ID	INSIDE DIAMETER
	IE	INVERT ELEVATION
	INV	INVERT
	IOS	INSTALLED BY OTHER SECTION
	IPS	IRON PIPE SIZE
	KS	KITCHEN SINK
	KW	KILOWATT
	LAB	LABORATORY
	LVG	LEAVING
	LWT	LEAVING WATER TEMPERATURE
	M	MOTOR
	MATL	MATERIAL
	MAX	MAXIMUM
	MBH	THOUSAND BTU PER HOUR
	MCC	MOTOR CONTROL CENTER
	MECH	MECHANICAL
	MFR	MANUFACTURER
	MIN	MINIMUM
	MISC	MISCELLANEOUS
	MTD	MOUNTED
N	NA	NOT APPLICABLE
	NC	NORMALLY CLOSED
	NO	NORMALLY OPEN OR NUMBER
	NOM	NOMINAL
	NTS	NOT TO SCALE

ABBREVIATIONS – CONTINUED

O	OD	OUTSIDE DIAMETER
P	PD	PRESSURE DROP
	PG	PRESSURE GAUGE
	PLC	PROGRAMMABLE LOGIC CONTROLLER
	PNL	PANEL
	PSI	POUNDS PER SQUARE INCH
	PSIA	PSI ABSOLUTE
	PSIG	PSI GAUGE
	P&T	PRESSURE AND TEMPERATURE
R	RM	ROOM
	RPM	REVOLUTIONS PER MINUTE
S	SCADA	SUPERVISORY CONTROL AND DATA ACQUISITION
	SF	SQUARE FOOT (FEET)
	SHT	SHEET
	SPEC	SPECIFICATIONS
	SSTL	STAINLESS STEEL
	SQ	SQUARE
T	T&P	TEMPERATURE & PRESSURE RELIEF
	TEMP	TEMPERATURE
	THK	THICK(NESS)
	TOC	TOP OF CONCRETE
	TOP	TOP OF PIPE
	TOS	TOP OF STEEL
	TYP	TYPICAL
U	UL	UNDERWRITERS LABORATORY
	UNO	UNLESS NOTED OTHERWISE
W	W/	WITH
	W/O	WITHOUT
	WxH	WIDTH BY HEIGHT
	W&T	WASTE AND TRAP
	W&V	WASTE AND VENT

HVAC ABBREVIATIONS

AC	AIR CONDITIONER
AHU	AIR HANDLING UNIT
CU	CONDENSING UNIT
EA	EXHAUST AIR
EF	EXHAUST FAN
MAU	MAKE-UP AIR UNIT
OA	OUTSIDE AIR
RA	RETURN AIR
RTU	ROOF TOP UNIT
SA	SUPPLY AIR

NO.	DATE	REVISIONS	APP.

INTERIM REVIEW
Not intended for construction, bidding or permit purposes.
Engineer: RICARDO AZCARATE
P.E. Serial No.: 81863
Date: JANUARY 2026

QUIDDITY
Texas Board of Professional Engineers and Land Surveyors Reg. No. F-23290
6330 West Loop South, Suite 150 • Bellaire, TX 77401 • 713.777.5337

CITY OF HOUSTON
HARRIS COUNTY, TEXAS

DATE: JANUARY 2026 | DGN BY:
JOB NO: 00050-0099-01 | DWG BY: M ANDERSON

NOTE: CITY SIGNATURES VALID FOR ONE YEAR ONLY AFTER DATE OF SIGNATURES

SCOTT STREET No. 1
LIFT STATION REHABILITATION

SYMBOL & LEGEND – HVAC

CITY OF HOUSTON
HOUSTON PUBLIC WORKS

DRAWING SCALE N/A HORIZ: XXX VERT: XXX
CATEGORY NO. 2-H-1 SHEET NO. 172 OF 220
FOR CITY OF HOUSTON USE ONLY

AACE
TBPE REG. NO. F-10804

0 1 2 3 4 5 ORIGINAL SCALE IN INCHES FOR REDUCED PLANS

HVAC DEMOLITION NOTES:

GENERAL:

1. THIS IS A WASTEWATER LIFT STATION WITH CORROSIVE AND CLASSIFIED AREAS. CONTRACTOR SHALL TAKE NECESSARY PRECAUTIONS PER LATEST EDITION OF NFPA 820 – STANDARD FOR FIRE PROTECTION IN WASTEWATER TREATMENT AND COLLECTION FACILITIES.
2. THE LIFT STATION IS BEING REHABILITATED. SOME OF THE HVAC SERVING THE DRY WELLS, STAIRWELL AND ELECTRICAL ROOM IS BEING REPLACED OR DEMOLISHED.
3. EXISTING STRUCTURES, EQUIPMENT, ELEVATIONS, AND DETAILS SHOWN ARE NOT GUARANTEED TO BE ACCURATE AND ALL INCLUSIVE. EXISTING INFORMATION SHOWN IS APPROXIMATE, BASED ON AVAILABLE RECORD DRAWINGS.
4. BACKGROUNDS ARE DESIGN DRAWINGS FROM A PREVIOUS PROJECT. ACTUAL FIELD CONDITIONS MAY BE DIFFERENT FROM THOSE SHOWN ON THIS DRAWING. CONTRACTOR TO FIELD VERIFY EXISTING CONDITIONS IMPACTED BY OR IMPACTING THIS WORK PRIOR TO INITIATING THE WORK. CONTRACTOR SHALL REFER TO CONSTRUCTION DOCUMENTS FOR RESPONSIBILITIES RELATIVE TO THE VERIFICATION OF EXISTING FACILITIES AND COORDINATION WITH PLANT OPERATION.
5. DEMOLITION LIMITS SHOWN ARE APPROXIMATE AND MAY NEED TO BE ADJUSTED BASED ON FIELD CONDITIONS.
6. EXISTING EQUIPMENT SHOWN MAY BE NOT AS SHOWN, OR NOT FUNCTIONAL AT THE TIME OF CONSTRUCTION. CONTRACTOR SHALL VERIFY FIELD CONDITIONS AT THE START OF CONSTRUCTION AND IMMEDIATELY NOTIFY THE OWNER OF ANY VARIATIONS THAT AFFECT THE PROPOSED WORK.
7. REMOVE ALL DEMOLITION MATERIALS AND DISPOSE OF THEM IN AN APPROVED MANNER IN ACCORDANCE WITH CONTRACT DOCUMENTS.

PHASING:

8. CONTRACTOR SHALL PHASE DEMOLITION WITH THE NEW EQUIPMENT INSTALLATION AND OPERATION IN ORDER TO MAINTAIN EXISTING VENTILATION RATES AT 6 AIR CHANGES PER HOUR (ACH) MINIMUM AT ALL TIMES. CONTRACTOR SHALL PROVIDE TEMPORARY VENTILATION TO MAINTAIN 6 AIR CHANGES PER HOUR MINIMUM DURING CONSTRUCTION.
9. COORDINATE WITH ELECTRICAL ON PHASING OF POWER REQUIREMENTS.

HVAC NOTES:

GENERAL:

1. CONTRACTOR SHALL REVIEW ALL CONTRACT DOCUMENTS AND PROVIDE EQUIPMENT, DUCTWORK, PIPING, AND ASSOCIATED INSULATION, COATINGS, SUPPORTS, CONTROLS AND DEVICES, REGARDLESS OF WHETHER IT'S SHOWN ON ONE DRAWING AND NOT ANOTHER. FOR EXAMPLE, A DAMPER SHOWN ON A PLAN BUT NOT THE SCHEMATIC, OR VICE VERSA SHALL BE PROVIDED.

MATERIALS:

2. EQUIPMENT THAT IS SCHEDULED TO BE ALUMINUM CONSTRUCTION AND HAS ANY COMPONENT THAT IS NOT OF THOSE MATERIALS, SHALL HAVE COATINGS SUITABLE FOR EXPOSURE TO HYDROGEN SULFIDE (H2S).
3. WHERE COATINGS ARE REQUIRED, ALL COMPONENTS INSIDE AND OUTSIDE OF THE EQUIPMENT EXPOSED TO THE ENVIRONMENT ARE TO BE COATED.
4. ALL SUPPORTS AND FASTENERS SHALL BE GALVANIZED STEEL, UNLESS NOTED OTHERWISE.
5. ALL EXHAUST AND SUPPLY AIR DUCTWORK AND ASSOCIATED FITTINGS, AND DAMPERS SHALL BE GALVANIZED STEEL CONSTRUCTION WITH GALVANIZED STEEL HARDWARE. DUCTWORK SHALL BE DESIGNED FOR A MINIMUM 2–IN W.G. INTERNAL PRESSURE.

EQUIPMENT:

6. EQUIPMENT CLEARANCES SHALL BE PROVIDED PER THE NATIONAL ELECTRIC CODE (NEC) AND ACCESS REQUIREMENTS PER EQUIPMENT MANUFACTURER FOR MAINTENANCE AND REMOVAL OF PARTS.
7. FIELD MODIFICATION (E.G. CUTTING, REPAIR OF DAMAGED EQUIPMENT, ETC) WILL NOT BE ACCEPTED.
8. ELECTRIC UNIT HEATERS SHALL BE MOUNTED WITH BOTTOM OF EQUIPMENT AT 8'–0" AFF
9. ALL EQUIPMENT SHALL BE SECURELY ANCHORED TO STRUCTURE AND/OR ITS CONCRETE PAD.

DAMPERS:

10. ALL MOTORIZED DAMPERS ARE LOW LEAKAGE CLASS 1A @ 1 IN.W.G., UNLESS NOTED OTHERWISE.
11. MANUAL BALANCING DAMPERS SHALL BE PROVIDED FOR EACH AIR INLET OR OUTLET TO ACHIEVE THE AIRFLOW INDICATED.

DUCTWORK INLET & OULETS (GRILLES, REGISTERS, DIFFUSERS, SCREENS):

12. ALL INLETS AND OUTLETS SHALL HAVE A TERMINATING DEVICE (E.G. GRILLE OR SCREEN). ALL BOTTOM INLETS AT FLOOR LEVEL (E.G. 12"AFF) SHALL BE TERMINATED WITH 1/2"x1/2" 316 STAINLESS STEEL WIRE MESH IN A REMOVABLE FLANGED FRAME.

PIPING:

13. PIPE SUPPORTS SHALL BE GALVANIZED STEEL CONSTRUCTION WITH GALVANIZED STEEL HARDWARE AND PROVIDED EVERY 5–FT MAXIMUM, UNLESS OTHERWISE NOTED.
14. WHERE INSULATION IS TO BE PROVIDED ON PIPING, THE PIPE CLAMPS SHALL BE ON THE OUTSIDE OF THE INSULATION. PROVIDE RIGID INSULATION INSERTS AT EACH CLAMP LOCATION.
15. DRAIN PIPING SHALL BE SOLVENT WELDED SCH. 80 CPVC AND SLOPED AT 1/8" PER FOOT MINIMUM.

CONTROLS:

16. CONDUIT/WIRING BETWEEN HVAC EQUIPMENT AND ELECTRICAL EQUIPMENT SHALL BE FURNISHED AND INSTALLED BY ELECTRICAL.
17. CONDUIT/WIRING BETWEEN HVAC EQUIPMENT AND HVAC DEVICES SHALL BE FURNISHED AND INSTALLED BY HVAC PER DIVISION 16 SPECIFICATIONS.
18. CONTRACTOR SHALL VERIFY ALL EQUIPMENT AND DEVICE TAGS WITH DIVISION 17.

COORDINATION:

19. REFER TO MECHANICAL SHEETS FOR COORDINATION OF PROCESS EQUIPMENT, PIPING, AND ACCESSORIES. VERIFY SPACE REQUIREMENTS FOR HVAC EQUIPMENT, DUCTWORK, SUPPORTS, DEVICES, AND ALL CLEARANCES.
20. REFER TO ARCHITECTURAL AND STRUCTURAL SHEETS FOR COORDINATION OF ROOF, FLOOR, AND WALL OPENINGS.
21. COORDINATE WITH ACCESS HATCHES, BEAMS, AND CROSS BRACING.
22. COORDINATE LOCATION OF PENETRATIONS AND DUCTWORK ROUTING WITH EXISTING ELECTRICAL CONDUIT, WIRING, AND LIGHTS. REFER TO ELECTRICAL DRAWINGS FOR DEMOLITION AND NEW WORK.
23. REFER TO STRUCTURAL DETAILS FOR ADDITIONAL INFORMATION ON CONCRETE CURBS AND PADS.
24. HVAC CONTRACTOR SHALL COORDINATE PURCHASED EQUIPMENT WITH ROOF OPENINGS AND CONCRETE ROOF CURB/PAD SIZES.
25. REFER TO STRUCTURAL NOTES FOR PENETRATIONS AND ANCHORS IN EXISTING CONCRETE AND COORDINATION WITH REBAR.
26. ALL POWER WIRING/CONDUIT, STARTERS, AND DISCONNECTS ARE FURNISHED AND INSTALLED BY DIVISION 26, UNLESS OTHERWISE NOTED. NOTE, THE FOLLOWING EQUIPMENT HAVE STARTERS PROVIDED BY THE EQUIPMENT MANUFACTURER:
    - PACKAGED MAKE–UP AIR UNITS (MAU)
45. ANY DEVIATION FROM SCHEDULED VOLTS/PHASE, HORSEPOWER, OR MAX OVER CURRENT PROTECTION (MOCP) IS TO BE COORDINATED WITH ELECTRICAL AND NOTED ON THE SUBMITTAL FOR APPROVAL.

AACE
TBPE REG. NO. F-10804

NO.	DATE	REVISIONS	APP.

INTERIM REVIEW
Not intended for construction, bidding or permit purposes.
Engineer: RICARDO AZCARATE
P.E. Serial No.: 81863
Date: JANUARY 2026

QUIDDITY
Texas Board of Professional Engineers and Land Surveyors Reg. No. F-23290
6330 West Loop South, Suite 150 • Bellaire, TX 77401 • 713.777.5337

CITY OF HOUSTON
HARRIS COUNTY, TEXAS

DATE: JANUARY 2026 DGN BY:
JOB NO: 00050–0099–01 DWG BY: M ANDERSON

NOTE: CITY SIGNATURES VALID FOR ONE YEAR ONLY AFTER DATE OF SIGNATURES

SCOTT STREET No. 1
LIFT STATION REHABILITATION

HVAC GENERAL NOTES

CITY OF HOUSTON
HOUSTON PUBLIC WORKS

DRAWING SCALE N/A HORIZ: XXX VERT: XXX
CATEGORY NO. 2–H–2 SHEET NO. 173 OF 220
FOR CITY OF HOUSTON USE ONLY

0 1 2 3 4 5 ORIGINAL SCALE IN INCHES FOR REDUCED PLANS

GENERAL NOTES:

1. DEMOLISH ALL HANGERS, SUPPORTS, ASSOCIATED WITH THE DEMOLISHED DUCTWORK. REMOVE CONCRETE CURBS AND PATCH WALL AND FLOOR OPENINGS, SEE STRUCTURAL.

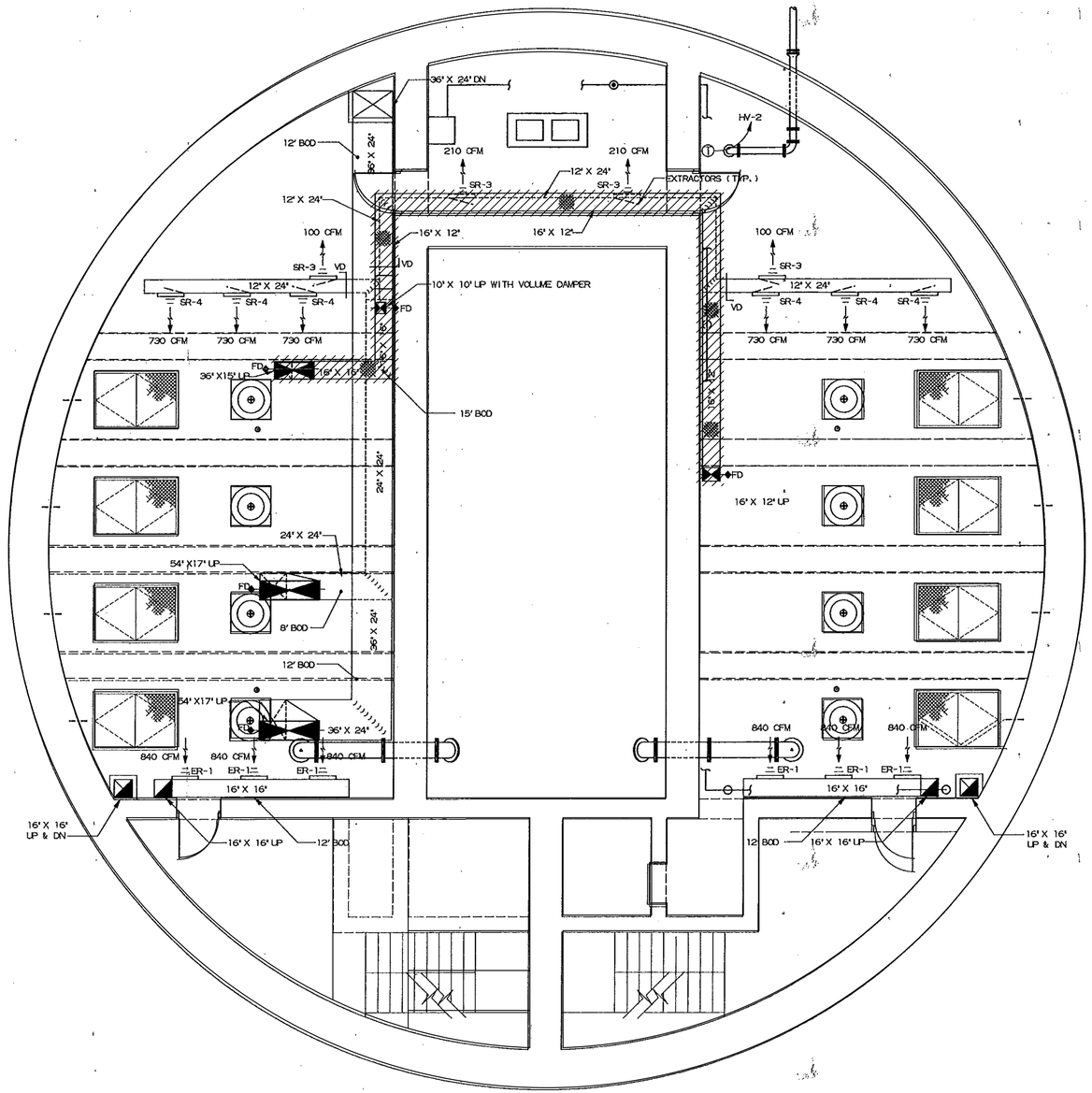

NO.	DATE	REVISIONS	APP.

INTERIM REVIEW

Not intended for construction, bidding or permit purposes.

Engineer: RICARDO AZCARATE

P.E. Serial No.: 81863

Date: JANUARY 2026

QUIDDITY

Texas Board of Professional Engineers and Land Surveyors Reg. No. F-23290
6330 West Loop South, Suite 150 • Bellaire, TX 77401 • 713.777.5337

CITY OF HOUSTON
HARRIS COUNTY, TEXAS

DATE: JANUARY 2026 DGN BY:
JOB NO: 00050-0099-01 DWG BY: M ANDERSON

NOTE: CITY SIGNATURES VALID FOR ONE YEAR ONLY AFTER DATE OF SIGNATURES

SCOTT STREET No. 1
LIFT STATION REHABILITATION

INTERMEDIATE LEVEL – HVAC DEMOLITION

CITY OF HOUSTON
HOUSTON PUBLIC WORKS

DRAWING SCALE N/A HORIZ: XXX VERT: XXX

CATEGORY NO. 2-H-3 SHEET NO. 174 OF 220

FOR CITY OF HOUSTON USE ONLY

AACE
TBPE REG. NO. F-10804

P:\066001 – JCI – COH Scott Lift Station\200 Design Phase\206 CAD\HVAC\2-H-3.dwg, 1/12/2026 4:29:09 PM, tgallia

0 1 2 3 4 5 ORIGINAL SCALE IN INCHES FOR REDUCED PLANS

NOTES:
1. REFER TO 2-H-2 FOR GENERAL NOTES

GENERAL NOTES:

1. DEMOLISH ALL PIPING, HANGERS, SUPPORTS, CONDUIT AND WIRE, ASSOCIATED WITH THE DEMOLISHED EQUIPMENT AND DUCTWORK. REMOVE CONCRETE CURBS AND PATCH WALL AND FLOOR OPENINGS, SEE STRUCTURAL.

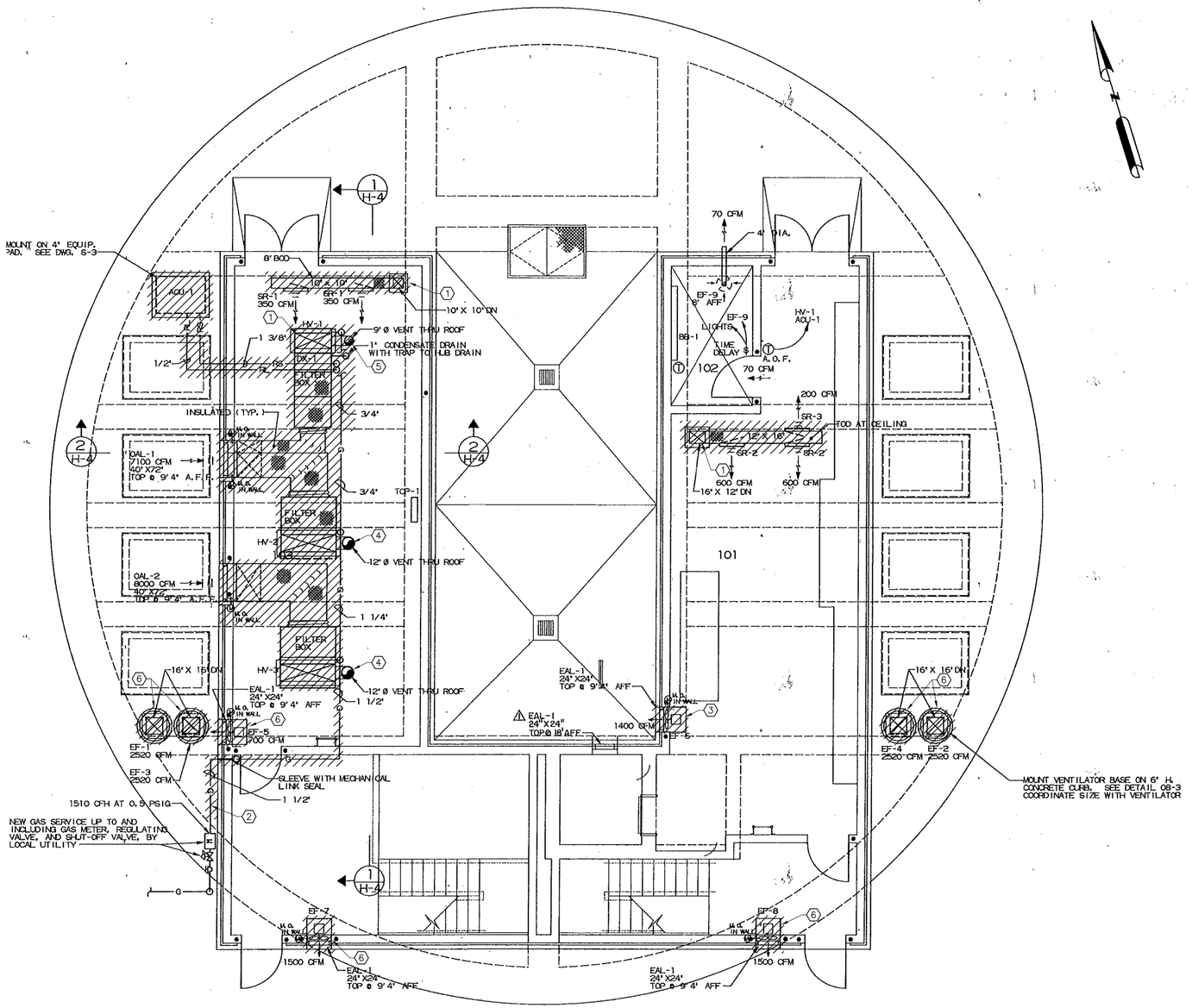

KEYED NOTES:

1. REMOVE CONCRETE CURB AROUND DUCT, PATCH EXIST FLOOR OPENING, SEE STRUCT.
2. DEMO EXIST GAS PIPING AND ALL ASSOCIATED HANGERS AND SUPPORTS DOWNSTREAM OF EXIST PRESSURE REGULATOR. PATCH EXTERIOR WALL AND FIRE RATED STAIRWELL WALL.
3. DEMO EXIST EXHAUST FAN AND ASSOCIATED SUPPORTS, DAMPERS, AND CONTROLS. PATCH EXIST WALL OPENING, SEE ARCHITECTURAL.
4. REUSE PATH OF EXISTING FLUES THRU ROOF FOR NEW FLUES.
5. DEMOLISH EXISTING FLUE. THIS FLUE PATH WILL NOT BE REUSED. PATCH CEILING AND CAP ROOF PENETRATION.
6. THESE FANS ARE BEING REPLACED.

NO.	DATE	REVISIONS	APP.

INTERIM REVIEW
Not intended for construction, bidding or permit purposes.
Engineer: RICARDO AZCARATE
P.E. Serial No.: 81863
Date: JANUARY 2026

QUIDDITY
Texas Board of Professional Engineers and Land Surveyors Reg. No. F-23290
6330 West Loop South, Suite 150 • Bellaire, TX 77401 • 713.777.5337

CITY OF HOUSTON
HARRIS COUNTY, TEXAS

DATE: JANUARY 2026 | DGN BY:
JOB NO: 00050-0099-01 | DWG BY: M ANDERSON

NOTE: CITY SIGNATURES VALID FOR ONE YEAR ONLY AFTER DATE OF SIGNATURES

SCOTT STREET No. 1
LIFT STATION REHABILITATION

UPPER LEVEL – HVAC DEMOLITION PLAN

CITY OF HOUSTON
HOUSTON PUBLIC WORKS

DRAWING SCALE N/A HORIZ: XXX VERT: XXX
CATEGORY NO. 2-H-4 SHEET NO. 175 OF 220
FOR CITY OF HOUSTON USE ONLY

AACE
TBPE REG. NO. F-10804

P:\066001 – JCI – COH Scott Lift Station\200 Design Phase\206 CAD\HVAC\2-H-4.dwg, 1/12/2026 4:29:17 PM, tgallia

0 1 2 3 4 5 ORIGINAL SCALE IN INCHES FOR REDUCED PLANS

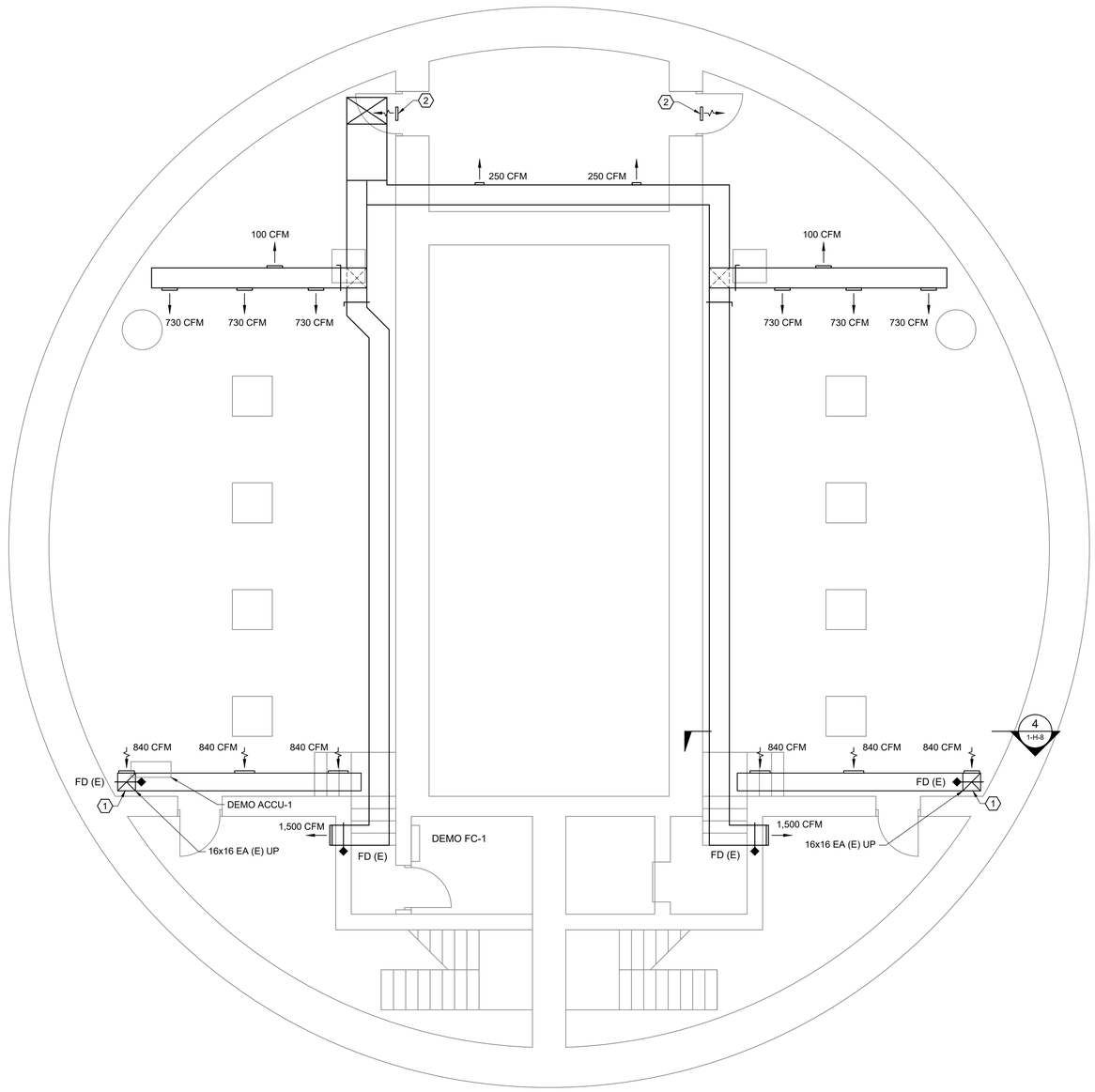

GENERAL NOTES:

1. REFER TO 2–H–2 FOR GENERAL NOTES..

KEYED NOTES:

(1) 16X16 DN TO 12" AFF, REPLACE ELL WITH TEE, PATCH EXIST HOLE.

(2) CUT DOOR AND INSTALL 12X12 TRANSFER AIR GRILLE FOR 250 CFM.

NO.	DATE	REVISIONS	APP.

INTERIM REVIEW

Not intended for construction, bidding or permit purposes.

Engineer: RICARDO AZCARATE

P.E. Serial No.: 81863

Date: JANUARY 2026

QUIDDITY
Texas Board of Professional Engineers and Land Surveyors Reg. No. F-23290
6330 West Loop South, Suite 150 • Bellaire, TX 77401 • 713.777.5337

CITY OF HOUSTON
HARRIS COUNTY, TEXAS

DATE: JANUARY 2026 DGN BY:
JOB NO: 00050–0099–01 DWG BY: M ANDERSON

NOTE: CITY SIGNATURES VALID FOR ONE YEAR ONLY AFTER DATE OF SIGNATURES

SCOTT STREET No. 1
LIFT STATION REHABILITATION

LOWER LEVEL – HVAC PLAN

CITY OF HOUSTON
HOUSTON PUBLIC WORKS

DRAWING SCALE N/A HORIZ: XXX VERT: XXX

CATEGORY NO. 2–H–5 SHEET NO. 176 OF 220

FOR CITY OF HOUSTON USE ONLY

AACE
TBPE REG. NO. F-10804

0 1 2 3 4 5 ORIGINAL SCALE IN INCHES FOR REDUCED PLANS

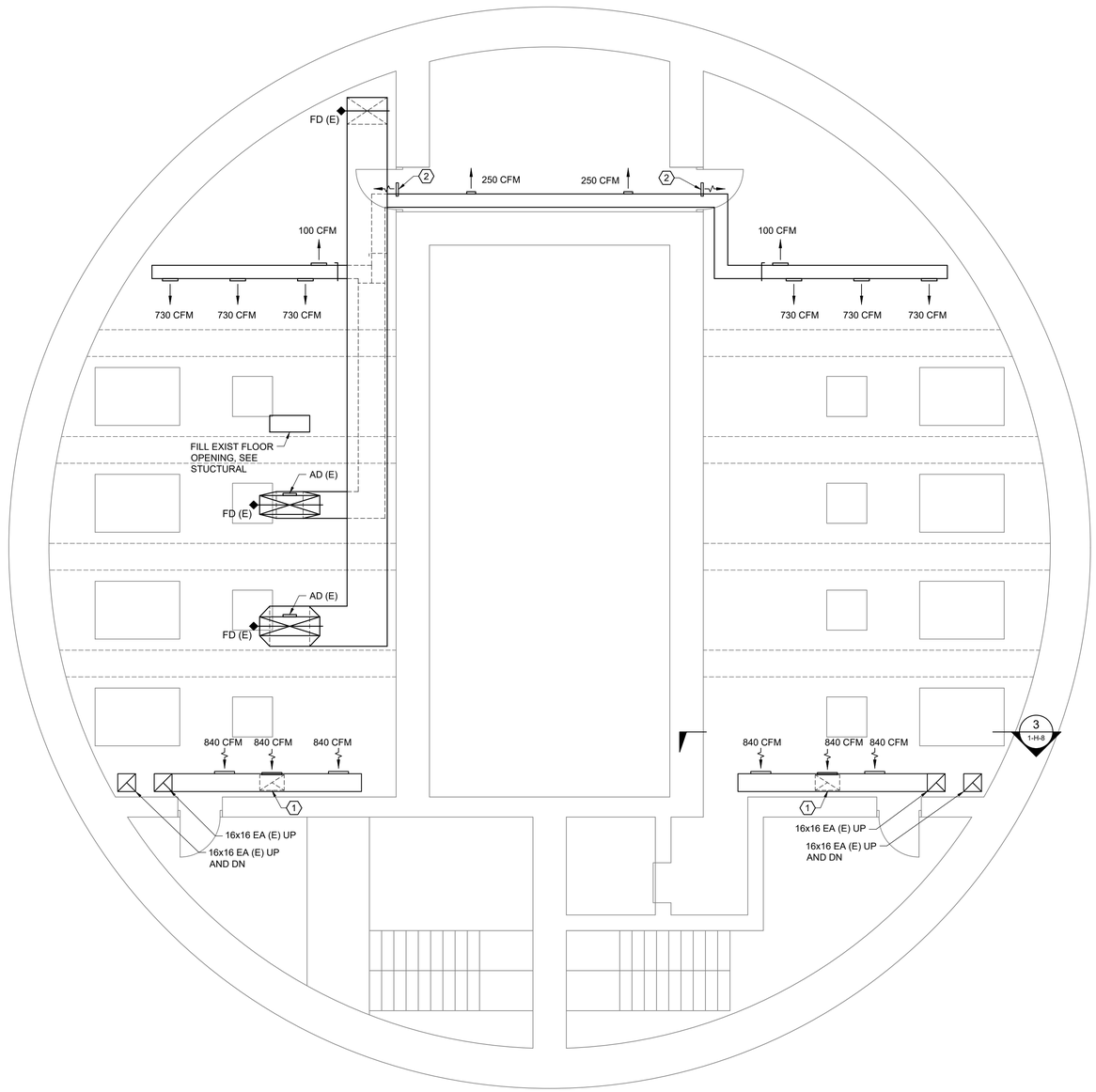

GENERAL NOTES:

1. REFER TO 2–H–2 FOR GENERAL NOTES..

KEYED NOTES:

(1) 22X14 DN TO 12" AFF, TAP BOTTOM OF EXIST DUCT, RELOCATE EXIST REGISTER, PATCH EXIST HOLE.

(2) CUT DOOR AND INSTALL 12x12 TRANSFER AIR GRILLE FOR 250 CFM.

NO.	DATE	REVISIONS	APP.

INTERIM REVIEW

Not intended for construction, bidding or permit purposes.

Engineer: RICARDO AZCARATE

P.E. Serial No.: 81863

Date: JANUARY 2026

QUIDDITY
Texas Board of Professional Engineers and Land Surveyors Reg. No. F-23290
6330 West Loop South, Suite 150 • Bellaire, TX 77401 • 713.777.5337

CITY OF HOUSTON
HARRIS COUNTY, TEXAS

DATE: JANUARY 2026 DGN BY:
JOB NO: 00050–0099–01 DWG BY: M ANDERSON

NOTE: CITY SIGNATURES VALID FOR ONE YEAR ONLY AFTER DATE OF SIGNATURES

SCOTT STREET No. 1
LIFT STATION REHABILITATION

INTERMEDIATE LEVEL – HVAC PLAN

CITY OF HOUSTON
HOUSTON PUBLIC WORKS

DRAWING SCALE N/A HORIZ: XXX VERT: XXX

CATEGORY NO. 2–H–6 SHEET NO. 177 OF 220

FOR CITY OF HOUSTON USE ONLY

AACE
TBPE REG. NO. F-10804

0 1 2 3 4 5 ORIGINAL SCALE IN INCHES FOR REDUCED PLANS

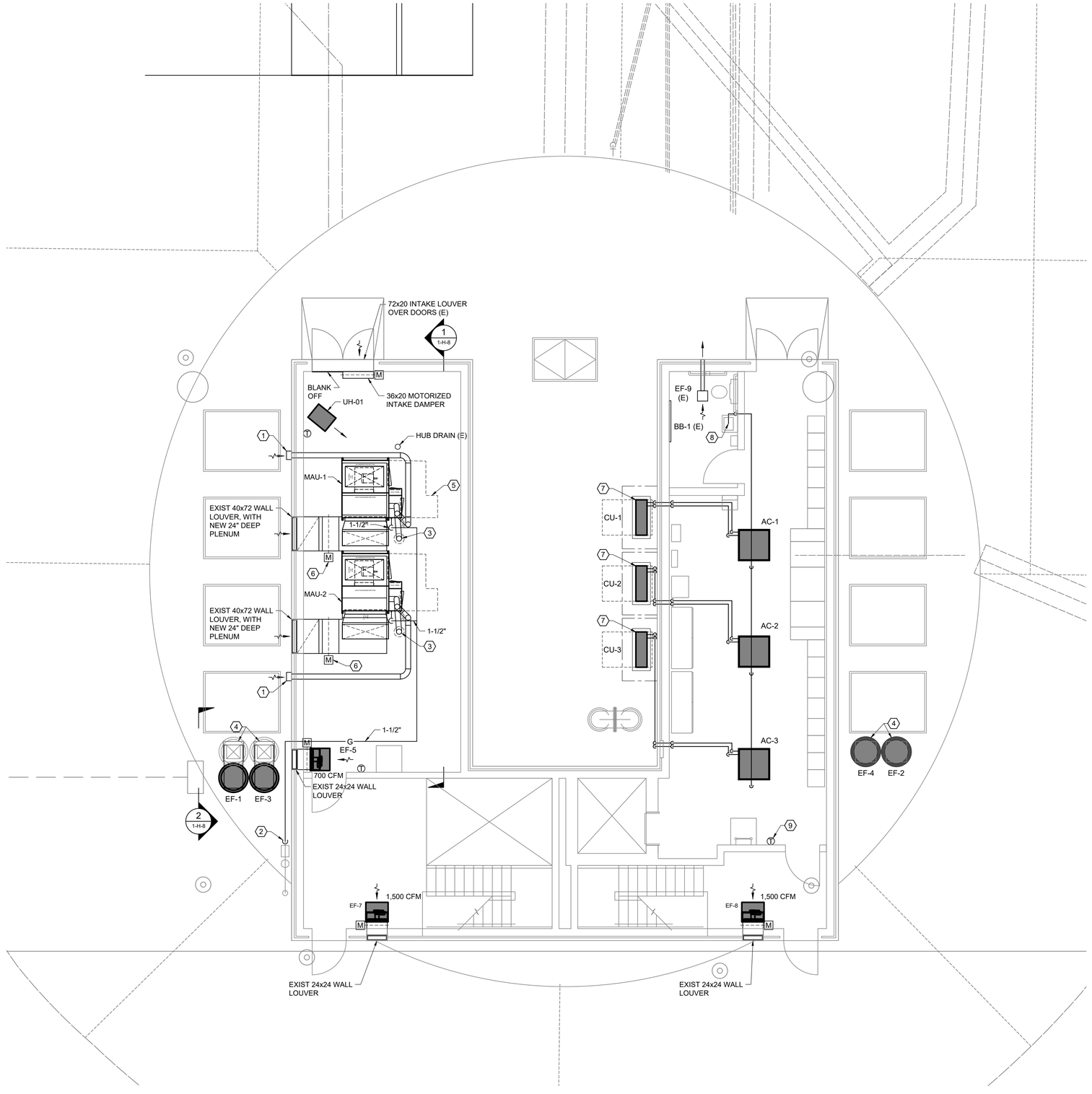

GENERAL NOTES:

1. REFER TO 2–H–2 FOR GENERAL NOTES..

KEYED NOTES:

(1) CORE DRILL WALL AND INSTALL 6" SCH-40 CPVC COMBUSTION AIR INTAKE WITH APPROVED WALL CAP.

(2) NEW GAS PIPING FROM EXIST PRESSURE REGULATOR TO NEW MAKE-UP AIR UNITS. ROUTE AROUND STAIRWELL. CORE DRILL EXTERIOR WALL AND SEAL WATER TIGHT.

(3) NEW 5" DOUBLE WALL FLUE UP THRU EXIST FLUE PATH TO ABOVE ROOF WITH APPROVED RAIN CAP. MODIFY EXIST ROOF THIMBLE COUNTERFLASHING AROUND NEW SMALLER FLUE.

(4) PROVIDE NEW, ALL WELDED, ALUMINUM, CURB CAP ADAPTOR FOR NEW EXHAUST FANS TALL ENOUGH TO HOUSE NEW OBD ISOLATION DAMPER WITH ACTUATOR MOUNTED ACCESSIBLE OUTSIDE OF CURB ADAPTOR.

(5) REQUIRED NEC AND MAINTENANCE CLEARANCE, TYP.

(6) NEW 40x30 ALUMINUM, LOW LEAKAGE, OBD MOTORIZED ISOLATION DAMPER.

(7) NEW CONDENSING UNITS SECURED TO NEW 8" TALL CONCRETE PADS. CONSTRUCT ALL ALUMINUM SECURITY CAGE AROUND EQUIPMENT WITH VANDAL RESISTANT COMBINATION LOCKS FOR MAINTENANCE REMOVAL..

(8) CORE DRILL THRU WALL, ROUTE CONDENSATE DRAIN EXPOSED DOWN WALL, REWORK LAV TAILPIECE AND CONNECT CONDENSATE PIPING. SLOPE CONDENSATE 1/8" PER FOOT.

(9) TEMPERATURE INDICATING TRANSMITTER, HARD WIRED DIRECT TO SCADA FOR LOW AND HIGH TEMPERATURE ALARMS.

NO.	DATE	REVISIONS	APP.

INTERIM REVIEW

Not intended for construction, bidding or permit purposes.

Engineer: RICARDO AZCARATE

P.E. Serial No.: 81863

Date: JANUARY 2026

QUIDDITY
Texas Board of Professional Engineers and Land Surveyors Reg. No. F-23290
6330 West Loop South, Suite 150 • Bellaire, TX 77401 • 713.777.5337

CITY OF HOUSTON
HARRIS COUNTY, TEXAS

DATE: JANUARY 2026 DGN BY:
JOB NO: 00050–0099–01 DWG BY: M ANDERSON

NOTE: CITY SIGNATURES VALID FOR ONE YEAR ONLY AFTER DATE OF SIGNATURES

SCOTT STREET No. 1
LIFT STATION REHABILITATION

UPPER LEVEL – HVAC PLAN

CITY OF HOUSTON
HOUSTON PUBLIC WORKS

DRAWING SCALE N/A HORIZ: XXX VERT: XXX

CATEGORY NO. 2–H–7 SHEET NO. 178 OF 220

FOR CITY OF HOUSTON USE ONLY

AACE
TBPE REG. NO. F-10804

0 1 2 3 4 5 ORIGINAL SCALE IN INCHES FOR REDUCED PLANS

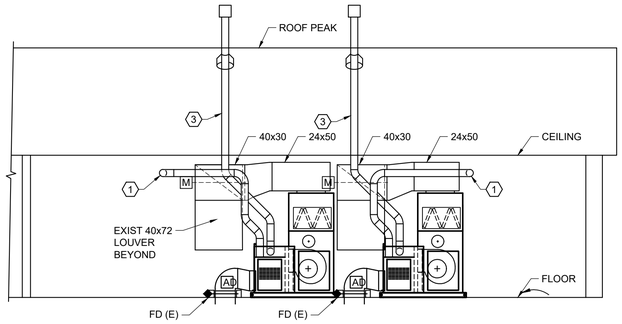

1 SECTION
– 3/16"=1'-0"

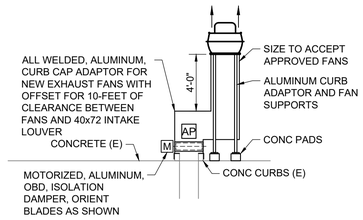

2 SECTION
– 3/16"=1'-0"

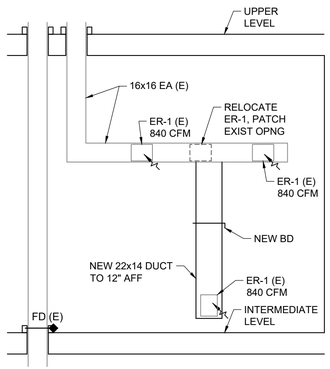

3 SECTION
– 3/16"=1'-0"

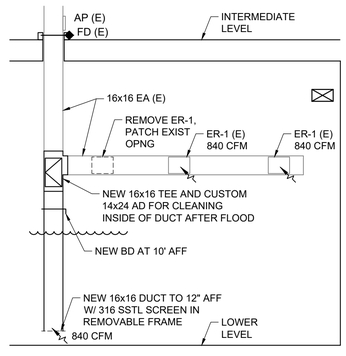

4 SECTION
– 3/16"=1'-0"

GENERAL NOTES:

1. REFER TO 2-H-2 FOR GENERAL NOTES..

NO.	DATE	REVISIONS	APP.

INTERIM REVIEW
Not intended for construction, bidding or permit purposes.
Engineer: RICARDO AZCARATE
P.E. Serial No.: 81863
Date: JANUARY 2026

QUIDDITY
Texas Board of Professional Engineers and Land Surveyors Reg. No. F-23290
6330 West Loop South, Suite 150 • Bellaire, TX 77401 • 713.777.5337

CITY OF HOUSTON
HARRIS COUNTY, TEXAS

DATE: JANUARY 2026 DGN BY:
JOB NO: 00050-0099-01 DWG BY: M ANDERSON

NOTE: CITY SIGNATURES VALID FOR ONE YEAR ONLY AFTER DATE OF SIGNATURES

SCOTT STREET No. 1
LIFT STATION REHABILITATION

HVAC SECTIONS

CITY OF HOUSTON
HOUSTON PUBLIC WORKS

DRAWING SCALE N/A HORIZ: XXX VERT: XXX

CATEGORY NO. 2-H-8 SHEET NO. 179 OF 220

FOR CITY OF HOUSTON USE ONLY

AACE
TBPE REG. NO. F-10804

0 1 2 3 4 5 ORIGINAL SCALE IN INCHES FOR REDUCED PLANS

SEQUENCES OF OPERATION:

1. THE DRY WELLS, HALLS, AND STAIRWELLS ARE VENTILATED 24/7 TO STAY UNCLASSIFIED AT 6 AIR CHANGES PER HOUR. INTERLOCK DAMPERS TO OPEN WHEN THE ASSOCIATED EQUIPMENT IS OPERATING.
2. THE MECHANICAL ROOM IS VENTILATED BY A WALL MOUNTED EXHAUST FAN CONTROLLED BY A 120/1/60 NEMA 4X THERMOSTAT EQUAL TO PECO MODEL TF115-023 (INITIAL SETTING 80 DEGREES). INTERLOCK INTAKE AND EXHAUST DAMPERS TO OPEN WHEN FAN IS ON AND CLOSED WHEN FAN IS OFF.
3. THE MECHANICAL ROOM IS HEATED BY A UNIT HEATER WITH WALL MOUNTED REMOTE THERMOSTAT SUPPLIED BY THE MANUFACTURER (INITIAL SETTING 60 DEGREES).
4. THE ELECTRICAL ROOM IS COOLED AND HEATED BY VARIABLE REFRIGERANT FLOW (VRF) DX UNITS WITH WALL MOUNTED CONTROLLERS SUPPLIED BY THE MANUFACTURER.

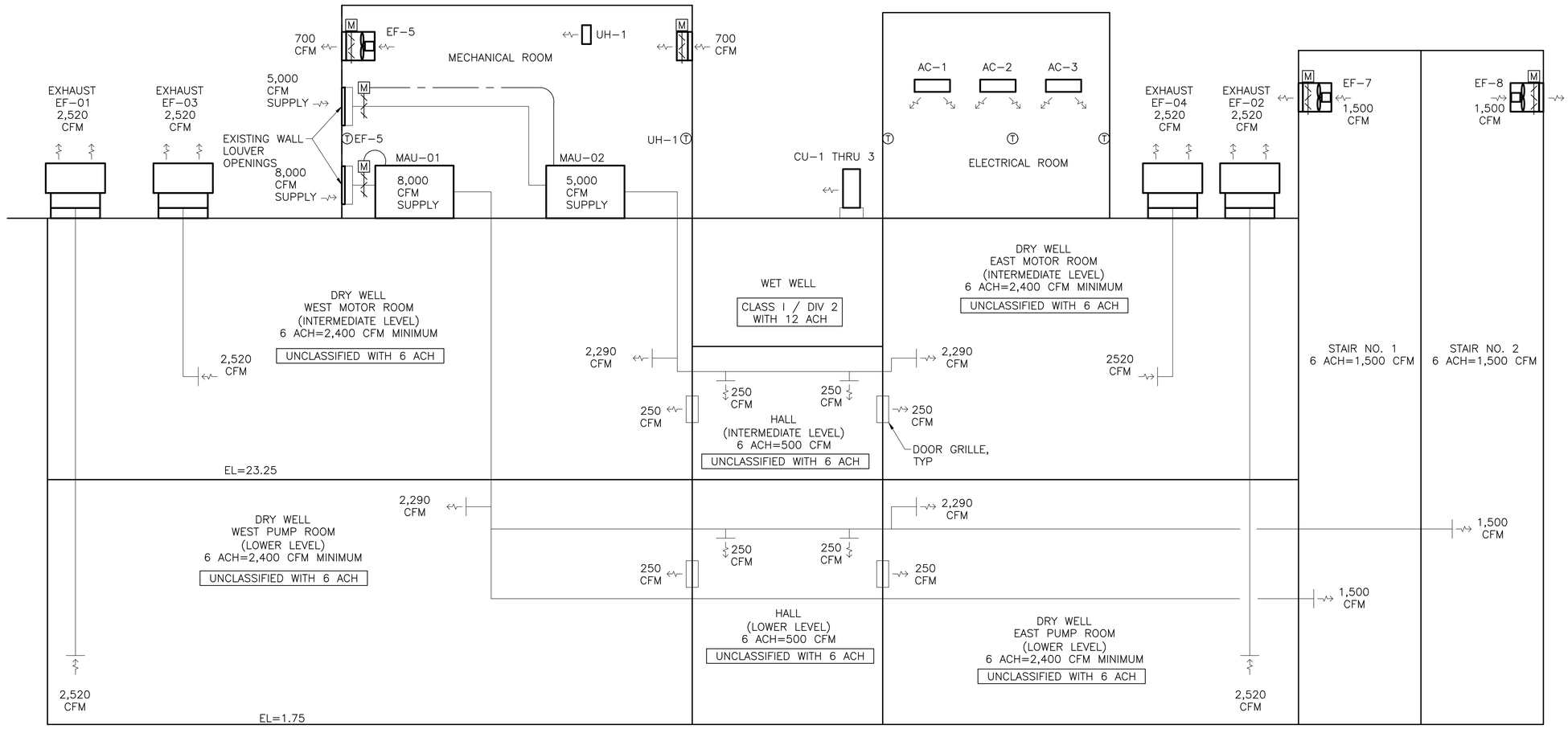

NO.	DATE	REVISIONS	APP.

INTERIM REVIEW
Not intended for construction, bidding or permit purposes.
Engineer: RICARDO AZCARATE
P.E. Serial No.: 81863
Date: JANUARY 2026

QUIDDITY
Texas Board of Professional Engineers and Land Surveyors Reg. No. F-23290
6330 West Loop South, Suite 150 • Bellaire, TX 77401 • 713.777.5337

CITY OF HOUSTON
HARRIS COUNTY, TEXAS

DATE: JANUARY 2026 | DGN BY:
JOB NO: 00050-0099-01 | DWG BY: M ANDERSON

NOTE: CITY SIGNATURES VALID FOR ONE YEAR ONLY AFTER DATE OF SIGNATURES

SCOTT STREET No. 1
LIFT STATION REHABILITATION

HVAC SCHEMATIC

CITY OF HOUSTON
HOUSTON PUBLIC WORKS

DRAWING SCALE N/A HORIZ: XXX VERT: XXX
CATEGORY NO. 2-H-9 SHEET NO. 180 OF 220
FOR CITY OF HOUSTON USE ONLY

AACE
TBPE REG. NO. F-10804

0 1 2 3 4 5 ORIGINAL SCALE IN INCHES FOR REDUCED PLANS

MAKE UP AIR HANDLING UNIT SCHEDULE

EQUIMENT TAG NUMBER	MAU-1	MAU-2	
BUILDING	WET WEATHER PUMP STATION	WET WEATHER PUMP STATION	
UNIT TYPE	PACKAGED GAS FIRED	PACKAGED GAS FIRED	
UNIT LOCATION	INDOOR	INDOOR	
UNIT CONFIGURATION	HORIZONTAL	HORIZONTAL	
FAN CONFIGURATION	DRAW-THRU	DRAW-THRU	
ALTITUDE, FT. ABOVE SEA LEVEL	45	45	
ENTERING TEMP. RANGE, DEG. F.	0-115	0-115	
HOUSING MATERIAL - OUTSIDE	ALUMINUM	ALUMINUM	
HOUSING MATERIAL - INSIDE	ALUMINUM	ALUMINUM	
FILTERS:	YES	YES	
FILTER TYPE	WASHABLE	WASHABLE	
FILTER MATERIAL	ALUMINUM	ALUMINUM	
MAX. FACE VELOCITY	500	500	
UNIT SIZE, W X D X H, IN	BY VENDOR	BY VENDOR	
PRESSURE DROP (CLEAN), IN. W.G.	BY VENDOR	BY VENDOR	
HEATING COIL:	YES	YES	
FUEL	NATURAL GAS	NATURAL GAS	
TYPE	INDIRECT FIRED	INDIRECT FIRED	
BURNER MATERIAL	CAST ALUMINUM	CAST ALUMINUM	
AIRFLOW, CFM	5,000	8,000	
MIN. TEMPERATURE RISE, DEG F	37.6	35.2	
UNIT INPUT, MBH	250.00	375.00	
MIN. UNIT OUTPUT, MBH	203.00	304.00	
NUMBER OF STAGES	15:1	15:1	
GAS MIN/MAX PRESSURE, IN. WC	MFR STD	MFR STD	
SUPPLY FAN:			
FAN TYPE	CENTRIFUGAL	CENTRIFUGAL	
TOTAL AIRFLOW, CFM	5,000	8,000	
OUTSIDE AIR	100%	100%	
EXTERNAL SP., IN. WG	0.8	0.8	
TOTAL SP., IN. WG	2.75	2.75	
FAN RPM	MFR STD	MFR STD	
DRIVE TYPE	BELT	BELT	
MOTOR HP	5.0	7.5	
MOTOR RPM	1725	1725	
FAN MOTOR ENCLOSURE	TEFC	TEFC	
FAN MOTOR EFFICIENCY	PREMIUM	PREMIUM	
SUPPLY AIR DISCHARGE LOCATION	HORIZONTAL	HORIZONTAL	
ELECTRICAL:			
VOLTS/PHASE/HERTZ	460/3/60	460/3/60	
EMERGENCY POWER	YES	YES	
MINIMUM CIRCUIT AMPACITY	10	13.5	
MAX. OVERCURRENT PROTECTION	15	20	
CONTROL PANEL	NEMA 4X	NEMA 4X	
SOUND DATA (DBA @ 5 FT. RADIUS)	79 MAX	79 MAX	
OPERATING WEIGHT, LBS	2100	2100	
ROOF CURB	N/A	N/A	
MANUFACTURER	ENG-AIR	ENG-AIR	
MODEL NUMBER	DJS40V	DJS40V	
NOTES	1,2,3,4,5	1,2,3,4,5	

REMARKS: (APPLICABLE TO ALL UNITS)

A. SCHEDULE IS INCOMPLETE WITHOUT SPECIFICATION SECTION 23 74 00.
B. PROVIDE HINGED ACCESS SECTIONS FOR MAINTENANCE ACCESSIBILITY TO INTERNAL COMPONENTS.
C. PROVIDE WITH UNIT MOUNTED DISCONNECT AND INTEGRAL MOTOR STARTER.

NOTES:

1. T.S.P. = INTERNAL LOSSES (BY VENDOR) + 3X CLEAN FILTER W.G. + E.S.P. (INDICATED ABOVE).
2. UNIT SHALL BE SINGLE-POINT CONNECTION WITH INTEGRAL TRANSFORMERS FOR CONTROL POWER AND 120V POWER.
3. PROVIDE WITH FILTER SECTION AND WASHABLE ALUMINUM FILTERS.
4. PROVIDE WITH CONNECTION AND CONFIGURATION FOR DUCTED COMBUSTION AIR.
5. PROVIDE WITH HORIZONTAL END DISCHARGE

CONDENSING UNIT SCHEDULE (DUCTLESS SPLIT SYSTEMS)

CONDENSING UNIT TAG NUMBER	CU-1 THRU 3		
BUILDING	WET WEATHER PUMP STATION		
AREA SERVED	ELECTRICAL ROOM		
UNIT TYPE	AIR-COOLED		
UNIT CONFIGURATION	HORIZONTAL		
MOUNTING	PAD MOUNTED		
AMBIENT TEMP. RATING DEG F. MAX.	110		
AMBIENT TEMP. RATING DEG F. MIN.	20		
NOMINAL TONS	3.0		
GROSS COOLING CAPACITY, MBH	36.0		
GROSS HEATING CAPACITY, MBH	40.0		
VOLTS/PHASE/HERTZ	208/1/60		
ELECTRICAL MCA, AMPS	34		
ELECTRICAL MOCP, AMPS	56		
MANUFACTURER	TRANE/MITSUBISHI		
MODEL NUMBER	PUZ-AK36NL		
COMPRESSOR TYPE	SCROLL		
REFRIGERANT TYPE	R454B		
COOLING SEER	23.3		
COOLING EER @ 95 DEG.F.	13.7		
MOTOR HP	MFR. STD.		
OPERATING WEIGHT, LBS	215		
NOTES:	1		

REMARKS: (APPLICABLE TO ALL UNITS)

A. SCHEDULE IS INCOMPLETE WITHOUT SPECIFICATION SECTION 15857.
B. PROVIDE LOW AMBIENT CONTROL WIND BAFFLE FOR OPERATION DOWN TO 0 DEG.F..
C. UNIT SHALL HAVE SPECIAL COATINGS ON UNIT, INSIDE AND OUT, INCLUDING CONDENSER COIL AND TUBES. COATINGS SHALL RESIST HYDROGEN SULFIDE.

NOTES:

1. INDOOR UNIT IS POWERED BY OUTDOOR CONDENSING UNIT, FIELD WIRING/CONDUIT BY DIV. 16.

AIR CONDITIONING UNIT SCHEDULE (DUCTLESS SPLIT SYSTEMS)

AIR CONDITIONER TAG NUMBER	AC-1 THRU 3	
BUILDING	WET WEATHER PUMP STATION	
AREA SERVED	ELECTRICAL ROOM	
UNIT TYPE	SPLIT DX	
UNIT CONFIGURATION	4-WAY	
MOUNTING	CEILING-CASSETTE	
FAN CONFIGURATION	MFR. STD.	
ALTITUDE, FT. ABOVE SEA LEVEL	20 (APPROX)	
NOMINAL TONS	3	
SUPPLY FAN:		
FAN TYPE	CENTRIFUGAL	
TOTAL AIRFLOW, CFM (H/M/L)	670-850-1020-1200	
MIN. OUTSIDE AIR, CFM	NONE	
FAN CONTROL	4-SPEED	
DRIVE TYPE	DIRECT	
COOLING COIL:		
ENT. AIR TEMP. DB/WB, DEG F	80/67	
APPROX LVG. AIR TEMP. DB/WB, DEG F	55/54	
TOTAL COOLING CAPACITY, MBH	36.0	
SENSIBLE CAPACITY, MBH	28.98	
CALCULATED SENSIBLE LOAD, MBH	22.2	
HEATING:		
TYPE	HEAT PUMP	
RATED CAPACITY, MBH	23.6	
REFRIGERANT TYPE	R454B	
FILTERS	MFR STD	
REFRIGERANT LIQUID PIPE SIZE, IN	3/8	
REFRIGERANT GAS PIPE SIZE, IN	5/8	
DRAIN PIPE SIZE	1-1/4	
ELECTRICAL:	NOTE 1	
VOLTS/PHASE/HERTZ	208/1/60	
MINIMUM CIRCUIT AMPACITY, MCA	2	
OPERATING WEIGHT, LBS	57	
MANUFACTURER	MITSUBISHI	
MODEL NUMBER	PLA-AE36NL	
ASSOCIATED CONDENSING UNITS	CU-1 THRU 3	
NOTES	1	

REMARKS: (APPLICABLE TO ALL UNITS)

A. SCHEDULE IS INCOMPLETE WITHOUT SPECIFICATION SECTION 15857.
B. PROVIDE WIRED WALL MOUNTED CONTROLLER.
C. PROVIDE MANUFACTURER STANDARD CONDENSATE PUMP AND HIGH WATER CUTOFF.
D. PROVIDE WITH EEV KITS PER MANUFACTURER.

NOTES:

1. INDOOR UNIT IS POWERED BY OUTDOOR CONDENSING UNIT. FIELD WIRING/CONDUIT BY DIV.16.

NO.	DATE	REVISIONS	APP.

INTERIM REVIEW

Not intended for construction, bidding or permit purposes.

Engineer: RICARDO AZCARATE

P.E. Serial No.: 81863

Date: JANUARY 2026

QUIDDITY
Texas Board of Professional Engineers and Land Surveyors Reg. No. F-23290
6330 West Loop South, Suite 150 • Bellaire, TX 77401 • 713.777.5337

CITY OF HOUSTON
HARRIS COUNTY, TEXAS

DATE: JANUARY 2026 DGN BY:
JOB NO: 00050-0099-01 DWG BY: M ANDERSON

NOTE: CITY SIGNATURES VALID FOR ONE YEAR ONLY AFTER DATE OF SIGNATURES

SCOTT STREET No. 1
LIFT STATION REHABILITATION

HVAC SCHEDULES I

CITY OF HOUSTON
HOUSTON PUBLIC WORKS

DRAWING SCALE N/A HORIZ: XXX VERT: XXX

CATEGORY NO. 2-H-10 SHEET NO. 181 OF 220

FOR CITY OF HOUSTON USE ONLY

AACE
TBPE REG. NO. F-10804

0 1 2 3 4 5 ORIGINAL SCALE IN INCHES FOR REDUCED PLANS

METAL FAN SCHEDULE

EQUIPMENT TAG NUMBER	EF-1 THRU 4	EF-5	EF-7 AND 8	
BUILDING	WET WEATHER PUMP STATION	WET WEATHER PUMP STATION	WET WEATHER PUMP STATION	
SERVICE	EXHAUST (24/7)	EXHAUST (SUMMER)	EXHAUST (24/7)	
UNIT CONFIGURATION	UPBLAST	SIDEWALL	SIDEWALL	
LOCATION	ROOF	MECHANICAL	STAIR	
DISCHARGE	TOP	SIDEWALL	SIDEWALL	
ALTITUDE, FT. ABOVE SEA LEVEL				
FAN MATERIAL OF CONSTRUCTION	ALUMINUM	ALUMINUM	ALUMINUM	
FAN TYPE	CENTRIFUGAL	CENTRIFUGAL	CENTRIFUGAL	
AIRFLOW, CFM	2,520	700	1,500	
TOTAL STATIC PRESSURE, IN. WG	0.5	0.3	0.3	
AIR STREAM TEMP RANGE, DEG F	50-110	50-110	50-110	
FAN RPM	1,555	749	1,056	
DRIVE TYPE	DIRECT	DIRECT	DIRECT	
MOTOR HP	1.0	0.25	860.00	
MOTOR RPM	1,555	1,043	1,600	
MOTOR ENCLOSURE	TEFC	TENV	TEFC	
FAN SPEED CONTROL	YES	YES	YES	
VOLTS/PHASE/HERTZ	460/3/60	115/1/60	115/1/60	
EMERGENCY POWER	PER NFPA 820	PER NFPA 820	PER NFPA 820	
SPARK PROOF	NO	NO	NO	
SOUND DATA (DBA @ 5 FT. RADIUS)	67	61	68	
VIBRATION ISOLATORS	MFR STD	MFR STD	MFR STD	
STANDARD CURB CAP SIZE, IN x IN	22x22	NONE	NONE	
CURB EXTENSION HEIGHT, IN	NONE	NONE	NONE	
CURB ADAPTER SIZE, IN x IN	SEE PLANS	NONE	NONE	
ROOF/WALL OPENING SIZE, IN x IN	SEE PLANS	SEE PLANS	SEE PLANS	
OPERATING WEIGHT, LBS	100	103	147	
MANUFACTURER	GREENHECK	GREENHECK	GREENHECK	
MODEL NUMBER	CUE-140-VG	AER-20-VG	AER-20-VGD	
DAMPER	NONE	SEE PLANS	NONE	
NOTES	1, 2, 5	1, 2	1, 2	
CONTROLS	24/7	SEE PLANS	24/7	

GENERAL NOTES: (APPLICABLE TO ALL UNITS)

1. SCHEDULE IS INCOMPLETE WITHOUT SPECIFICATION SECTION 23 34 00.
2. PROVIDE ALL BELT DRIVEN EQUIPMENT WITH ONE SET OF SPARE BELT(S).

NOTES:

1. PROVIDE WITH ALUMINUM CONSTRUCTION, STAINLESS STEEL SHAFT AND FASTENERS, AND COATINGS ON FAN AND ACCESSORIES.
2. PROVIDE WITH 50 DEGREE CELCIUS RATED PREMIUM EFFICIENCY MOTOR.
3. PROVIDE WITH PITCHED ALUMINUM CURB TO MATCH ROOF SLOPE, INSULATION, WOOD NAILER, AND FOAM CURB SEAL.
4. PROVIDE WITH ALUMINUM 12" CURB EXTENSION WITH ACCESS DOOR AND ALUMINUM BACKDRAFT DAMPER.
5. PROVIDE ALUMINUM CURB ADAPTER, COORDINATE WITH STRUCTURAL FOR CONCRETE CURB DIMENSIONS.
6. PROVIDE WITH ALUMINUM GRILLE, WALL DISCHARGE CAP, 6" DUCT CONNECTION, COATING COLOR TBD BY ARCHITECTURAL.
7. PROVIDE WITH SHORT WALL HOUSING WITH OSHA GUARD
8. PROVIDE WITH WEATHERHOOD KIT AND BIRSCREEN AT INTAKE AIR OPENING, ALL ALUMINUM CONSTRUCTION.

ELECTRIC UNIT HEATER SCHEDULE

EQUIPMENT TAG NUMBER	UH-1	
BUILDING	CHEMICAL BUILDING	
ROOM SERVED	SODIUM HYPOCHLORITE ROOM	
TOTAL CAPACITY, KW PER HEATER	10.0	
AIRFLOW, CFM	700	
AIR THROW, FT	N/A	
AIR TEMP RISE, DEG F	45	
FAN TYPE	PROPELLER	
MOTOR ENCLOSURE	TEFC	
TERMINAL ENCLOSURE	N/A	
RATING	N/A	
VOLTS/PHASE/HERTZ PER HEATER	480/3/60	
TOTAL CURRENT DRAW, AMPS	12.7	
EMERGENCY POWER	NO	
OPERATING WEIGHT, LBS	45	
MANUFACTURER	INDEECO UCI	
MODEL NUMBER	926U10000UA	
CONTROLS NOTES	C1	

REMARKS: (APPLICABLE TO ALL UNITS)

A. SCHEDULE IS INCOMPLETE WITHOUT SPECIFICATION SECTION 15550.
B. PROVIDE CLEARANCES PER MANUFACTURER.
C. UNIT SHALL BE MOUNTED AT 8'-0" UNLESS NOTED OTHERWISE.

NOTES:

1. UNIT SHALL BE SINGLE POINT ELECTRICAL CONNECTION WITH INTEGRAL TRANSFORMER FOR UNIT CONTROLS. DISCONNECT BY ELECTRICAL.
2. PROVIDE WITH SWIVEL BRACKET FOR WALL OR CEILING MOUNTING AS INDICATED ON PLANS.
3. HEATING ELEMENTS SHALL BE 316 STAINLESS STEEL.
4. PROVIDE WITH REMOTE MOUNTED NEMA4X THERMOSTAT AND AUTO RESET THERMAL CUTOUT.

CONTROLS NOTES:

C1. UNIT SHALL RUN INTERMITTENTLY, TURNING ON/OFF BASED ON ROOM THERMOSTAT SETPOINT.

NO.	DATE	REVISIONS	APP.

INTERIM REVIEW
Not intended for construction, bidding or permit purposes.
Engineer: RICARDO AZCARATE
P.E. Serial No.: 81863
Date: JANUARY 2026

QUIDDITY
Texas Board of Professional Engineers and Land Surveyors Reg. No. F-23290
6330 West Loop South, Suite 150 • Bellaire, TX 77401 • 713.777.5337

CITY OF HOUSTON
HARRIS COUNTY, TEXAS

DATE: JANUARY 2026 DGN BY:
JOB NO: 00050-0099-01 DWG BY: M ANDERSON

NOTE: CITY SIGNATURES VALID FOR ONE YEAR ONLY AFTER DATE OF SIGNATURES

SCOTT STREET No. 1
LIFT STATION REHABILITATION

HVAC SCHEDULES II

CITY OF HOUSTON
HOUSTON PUBLIC WORKS

DRAWING SCALE N/A HORIZ: XXX VERT: XXX

CATEGORY NO. 2-H-11 SHEET NO. 182 OF 220

FOR CITY OF HOUSTON USE ONLY

AACE
TBPE REG. NO. F-10804

0 1 2 3 4 5 ORIGINAL SCALE IN INCHES FOR REDUCED PLANS

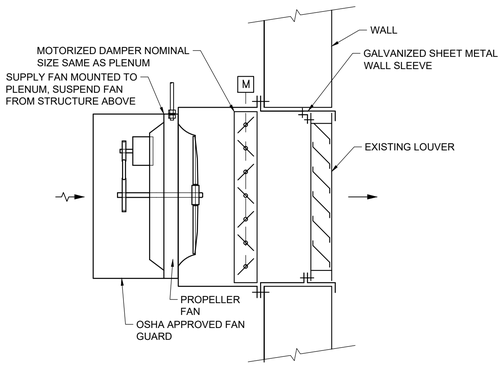

WALL MOUNTED EXHAUST FAN

DETAIL A
NTS –

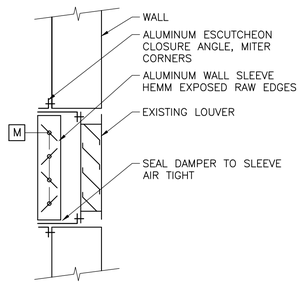

INTAKE DAMPER AT LOUVER

DETAIL B
NTS –

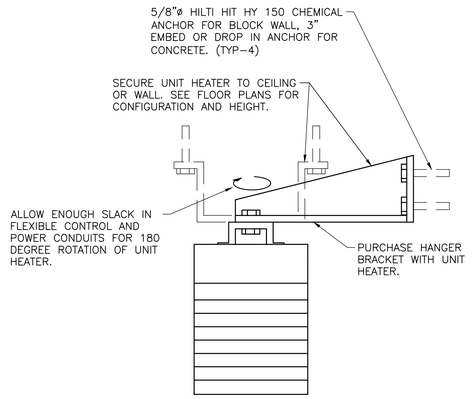

HORIZONTAL ELECTRIC UNIT HEATER

DETAIL C
NTS –

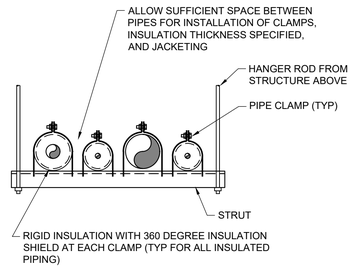

NOTES:

1. DO NOT PENETRATE INSULATION WITH PIPE CLAMPS.
2. GALVANIZED, CLAMPS, RODS, AND HARDWARE, TYP.

TRAPEZE HANGER

DETAIL D
NTS –

NO.	DATE	REVISIONS	APP.

INTERIM REVIEW
Not intended for construction, bidding or permit purposes.
Engineer: RICARDO AZCARATE
P.E. Serial No.: 81863
Date: JANUARY 2026

QUIDDITY
Texas Board of Professional Engineers and Land Surveyors Reg. No. F-23290
6330 West Loop South, Suite 150 • Bellaire, TX 77401 • 713.777.5337

CITY OF HOUSTON
HARRIS COUNTY, TEXAS

DATE: JANUARY 2026
JOB NO: 00050–0099–01
DGN BY:
DWG BY: M ANDERSON

NOTE: CITY SIGNATURES VALID FOR ONE YEAR ONLY AFTER DATE OF SIGNATURES

SCOTT STREET No. 1
LIFT STATION REHABILITATION

HVAC DETAILS

CITY OF HOUSTON
HOUSTON PUBLIC WORKS

DRAWING SCALE N/A HORIZ: XXX VERT: XXX
CATEGORY NO. 2–H–12 SHEET NO. 183 OF 220
FOR CITY OF HOUSTON USE ONLY

AACE
TBPE REG. NO. F-10804

0 1 2 3 4 5 ORIGINAL SCALE IN INCHES FOR REDUCED PLANS

PRIMARY FLOW ELEMENTS

	MAGNETIC FLOW METER
	ULTRASONIC DOPPLER FLOW METER
	ULTRASONIC TIME TRANSIT FLOW METER
	VORTEX FLOW METER
	VENTURI TUBE
	TURBINE OR PROPELLER TYPE METER
	ROTAMETER
	PITOT TUBE
	WEIR FLOW METER
	PARSHALL FLUME OR TRAPEZOIDAL FLUME
	ORIFICE PLATE
	THERMAL MASS FLOWMETER

PRIMARY LEVEL ELEMENTS

	ULTRASONIC LEVEL TRANSDUCER
	RADAR LEVEL TRANSDUCER
	PRIMARY ELEMENT PRESSURE PROBE LEVEL TRANSMITTER
	BUBBLER LEVEL TUBE ELEMENT
	CONDUCTIVE LEVEL PROBE
	FLOAT SWITCH

VALVES

	VALVE - OTHER IN-LINE TYPE NOT OTHERWISE IDENTIFIED
	THREE-WAY VALVE
	BALL VALVE
	GLOBE VALVE
	PINCH VALVE
	GATE VALVE
	NEEDLE VALVE
	DIAPHRAGM VALVE
	BUTTERFLY VALVE
	CHECK VALVE WITH FLOW DIRECTION
	PLUG VALVE
	BALL CHECK VALVE
	PRESSURE-REDUCING REGULATOR INTERNAL PRESSURE TAP
	BACK PRESSURE REGULATOR INTERNAL PRESSURE TAP
	PRESSURE-REDUCING REGULATOR EXTERNAL PRESSURE TAP
	BACK PRESSURE REGULATOR EXTERNAL PRESSURE TAP

VALVES

S	SOLENOID ACTUATED VALVE
	"X" P AIR CYLINDER; O OIL CYLINDER; H HYDRAULIC CYLINDER; E ELECTRIC MOTOR; S SOLENOID VALVE
OR NO SYMBOL	MANUAL VALVE

MISC PROCESS SYMBOLS

	ANNULAR TYPE SEAL
	CHEMICAL INJECTION POINT
	STRAINER
	DRAIN
	VENT SCREEN
	QUICK CONNECT TYPE COUPLING
	NORMAL OPERATING LEVEL
	UV CHAMBER
	FLOW STRAIGHTENER
	LOAD CELL
	SPRAY NOZZLE
	BLIND FLANGE
	FLANGE
	DIAPHRAGM SEAL
	PRESSURE RELIEF (OUT)
	VACUUM RELIEF (IN)

GATES

	SLUICE/SLIDE GATE
	FLOW CONTROL GATE

MOTORS

M	VARIABLE SPEED MOTOR
M	CONSTANT SPEED MOTOR

PUMPS, BLOWERS AND MISC EQUIPMENT

	CENTRIFUGAL BLOWER
	CENTRIFUGAL PUMP
	DIAPHRAGM PUMP AND MOTOR
	PROGRESSIVE CAVITY PUMP
	SUBMERSIBLE PUMP
	POSITIVE DISPLACEMENT BLOWER

PUMPS, BLOWERS AND MISC EQUIPMENT

	MIXER/FLOCCULATOR/AERATOR
	VERTICAL PUMP-1 USED WHEN DISCHARGE LINE IS IN WETWELL
	VERTICAL PUMP-2 USED WHEN DISCHARGE LINE IS EXPOSED.
	VERTICAL PUMP SHAFT USED WHEN INTAKE OF PUMP IS ENCASED.
	SUBMERSIBLE MIXER
	COMPRESSOR
	HEAT EXCHANGER
	FEED PUMP
	GRINDER/MACERATOR
	METERING PUMP
	PLUNGER PUMP
	PERISTALTIC METERING PUMP
	CENTRIFUGE
	PULSATION DAMPENER
	TURBO BLOWER

PUMPS, BLOWERS AND MISC EQUIPMENT

	ROTARY SCREEN

CONTROL ENCLOSURE, INSTRUMENTS AND SCADA

XXX / P AAA YY / BBB CCC D / ZZZ	DIGITAL/ANALOG INSTRUMENT AAA ISA TAG (REFER TO TABLE) BBB LOOP NUMBER CCC LOOP NUMBER SUB D DIVISION NUMBER P POWER REQUIREMENT XXX DESCRIPTION (USED ON PANEL INSTRUMENTS) YY CHEMICAL ZZZ LOCATION DIGITAL/ANALOG INSTRUMENT -LOCATED IN THE FIELD -NOT INSIDE OF PANEL -VISIBLE AT FIELD LOCATION -NORMALLY OPERATOR ACCESSIBLE
XXX / P AAA YY / BBB CCC D / ZZZ	DIGITAL/ANALOG INSTRUMENT -LOCATED ON PANEL -VISIBLE TO OPERATOR -NORMALLY OPERATOR ACCESSIBLE
XXX / P AAA YY / BBB CCC D / ZZZ	DIGITAL/ANALOG INSTRUMENT -LOCATED INSIDE PANEL -NOT VISIBLE TO OPERATOR -NORMALLY NOT ACCESSIBLE
XXX / AAA / BBB CCC	DISPLAY (INDICATION/CONTROLLER) AAA ISA TAG (REFER TO TABLE) BBB LOOP NUMBER CCC LOOP NUMBER SUB XXX DESCRIPTION DISPLAY (INDICATION/CONTROLLER) -LOCATED IN THE FIELD -NOT INSIDE OF PANEL -VISIBLE AT FIELD LOCATION -NORMALLY OPERATOR ACCESSIBLE
XXX / AAA / BBB CCC	DISPLAY (INDICATION/CONTROLLER) -LOCATED ON PANEL -VISIBLE TO OPERATOR -NORMALLY OPERATOR ACCESSIBLE
XXX / AAA / BBB CCC	DISPLAY (INDICATION/CONTROLLER) -LOCATED INSIDE PANEL -NOT VISIBLE TO OPERATOR -NORMALLY NOT ACCESSIBLE
-	INTERLOCKING RELAY

CONTROL ENCLOSURE AND SCADA

	DIGITAL INPUT
	DIGITAL OUTPUT
	ANALOG INPUT
	ANALOG OUTPUT
	SURGE SUPPRESSOR
	OPTO ISOLATOR
/	SIGNAL CONVERTER/ ISOLATOR */* - (INPUT/OUTPUT) *DEFINED AS FOLLOWS: E - VOLTAGE I - CURRENT P - PNEUMATIC PD- PULSE DURATION H - HYDRAULIC O - ELECTROMAGNETIC, SONIC R - RESISTANCE (ELECTRIC)

CONTROL ENCLOSURE, INSTRUMENTS AND SCADA

F(X)

PLC/RTU LOGIC

FUNCTION SYMBOLS AND ABBREVIATIONS

- PROPORTIONAL GAIN OR ATTENUATE (INPUT:OUTPUT)
- REVERSE PROPORTIONAL GAIN OR ATTENUATE (INPUT:OUTPUT)
- Σ SUMMING
- AVERAGING
- Δ SUBTRACTING
- EXTRACT SQUARE ROOT
- DIVIDE
- X MULTIPLY
- S INTEGRATE
- + BIAS POSITIVE
- - BIAS NEGATIVE
- F(X) NONLINEAR OR UNSPECIFIED FUNCTION
- > HIGH SELECT
- < LOW SELECT
- HIGH LIMIT
- LOW LIMIT

INSTRUMENT (COMMON HOUSING)	INSTRUMENT (SEPERATOR HOUSING)	INSTRUMENT (PART OF MAJOR EQUIPMENT)

HAND SWITCH ABBREVIATIONS

HOA	HAND/OFF/AUTO
HOR	HAND/OFF/REMOTE
LOC	LOCAL/OFF/COMPUTER
LOR	LOCAL/OFF/REMOTE
LOS	LOCKOUT STOP
OSC	OPEN/STOP/CLOSE
RSL	RAISE/STOP/LOWER
L/C	LOCAL/COMPUTER
L/R	LOCAL/REMOTE
O/C	OPEN/CLOSE
S/S	START/STOP
A/M	AUTO/MANUAL
H/C	HAND/COMPUTER
PB	PUSHBUTTON

GENERAL NOTES:

1. THIS IS A GENERAL LEGEND SHEET, SOME SYMBOLS AND ABBREVIATIONS MAY NOT APPLY TO THIS SPECIFIC PROJECT.
2. THIS LEGEND APPLIES TO INSTRUMENTATION DIAGRAMS ONLY AND MAY DIFFER FROM LEGENDS FOR OTHER SHEETS.
3. IN GENERAL THIS LEGEND SHEET AND THE INSTRUMENTATION DIAGRAMS ARE BASED ON INTERNATIONAL SOCIETY OF AUTOMATION, STANDARDS FOR PRACTICES FOR INSTRUMENTATION, STANDARD S5.1 SOME MODIFICATIONS, ADDITIONS AND ALTERATIONS HAVE BEEN MADE AS REQUIRED TO ACCOMMODATE THE PROJECT REQUIREMENTS.
4. SOME PROCESS ITEMS, SUCH AS EQUIPMENT SOLATION VALVES, BYPASS LINES, ETC., WHICH ARE NOT CRITICAL FOR AN UNDERSTANDING OF THE INSTRUMENTATION AND CONTROL FUNCTIONS ARE NOT SHOWN ON THE INSTRUMENTATION SHEETS.
5. SEE ELECTRICAL SHEETS AND SPECIFICATIONS FOR ADDITIONAL CONTROL AND INTERLOCK REQUIREMENTS FOR EQUIPMENT NOT SHOWN OR NOT PROVIDED BY THE INSTRUMENTATION SUPPLIER.
6. IN THE EVENT OF DISCREPANCY BETWEEN THE PROCESS & INSTRUMENTATION DIAGRAMS AND THE LOOP DIAGRAMS, THE INFORMATION FROM THE LOOP DIAGRAMS SHALL BE USED.

NO.	DATE	REVISIONS	APP.

KGI Kalluri Group, Inc.
TBPE Registration No. F-665
16300 Katy Freeway, Suite 172
Houston, Texas 77094
Phone: (713)-365-9288
PROJECT 4285

QUIDDITY
Texas Board of Professional Engineers and Land Surveyors Reg. No. F-23290
6330 West Loop South, Suite 150 • Bellaire, TX 77401 • 713.777.5337

JOB NO: 00050-0099-01 DATE: 5/7/2026

APPROVED BY: RK

DATE: 05/2026

DESIGNED BY: SLJ

DRAWN BY: RHW

SURVEYED BY: WESTERN GROUP CONSULTANTS
FB NO. P-6414

STATE OF TEXAS
STACY L. JORDAN
148233
LICENSED
PROFESSIONAL ENGINEER
04.12.2026

CITY OF HOUSTON
HOUSTON PUBLIC WORKS

SCOTT STREET NO. 1 LIFT STATION REHABILITATION
INSTRUMENTATION

INSTRUMENTATION LEGENDS & SYMBOLS SHEET 1

WBS NUMBER	FOR CITY OF HOUSTON USE ONLY
R-000267-127A-4	
DRAWING SCALE	
AS NOTED	
CITY OF HOUSTON PM	
TAHA LOTIA	
DWG NO. 0-I-01	
SHEET NO. 184 OF 220	

F:\Users\KGI-Stacy.Jordan\Kalluri Group, Inc\KGI - Documents\4285-QEL (Scott Street LS)\Drawings\Instrumentation\0-I-01 INSTRUMENTATION LEGENDS & SYMBOLS 1.dwg

0 1 2 3 4 5 ORIGINAL SCALE IN INCHES FOR REDUCED PLANS

LINE SYMBOLS

	MAJOR PROCESS LINE
	MINOR PROCESS LINE
	FUTURE PROCESS LINE
	EXISTING PROCESS LINE
	HARDWIRED SIGNAL
	SOFT LINK
	HYDRAULIC LINK
	PNEUMATIC LINK
	CAPILLARY TUBE OR FILLED SYSTEM SIGNAL
	ELECTROMAGNET OR SONIC SIGNAL (GUIDED)
PROCESS FLUID DWG NO. TO/FROM	TO/FROM: THE TO OR FROM PROCESS LOCATION DWG NO.: SHEET IN THE DESIGN SET FOR CONTINUATION
SIGNAL LINE DWG NO. TO/FROM	TO/FROM: THE TO OR FROM SIGNAL LOCATION DWG NO.: SHEET IN THE DESIGN SET FOR CONTINUATION
DESCRIPTION	(USED WHEN REFERRING TO A SHEET NOT IN THE DESIGN SET) DESCRIPTION - WHERE FLOW IS GOING
CAT5e CAT5e	CAT-5e ETHERNET CABLE
CAT6 CAT6	CAT-6 ETHERNET CABLE
MB+ MB+	MODBUS PLUS CABLE
RS-485	RS-485 CABLE
RS-232 RS-232	RS-232 CABLE
POE POE	POWER OVER ETHERNET CABLE
T1 T1	T1 FIBER CONNECTION
FO FO	NON-SPECIFIC FIBER OPTIC CABLE
100 100	FIBER 100BASE-FX
1000 1000	FIBER 1000BASE-FX
	SIGNAL CROSSING
	PROCESS LINE CROSSING
	PROCESS LINE/ HARDWIRE SIGNAL CROSSING

EQUIPMENT/LOOP TAGGING

(X)	EQUIPMENT TAG USED TO IDENTIFY NON-INSTRUMENT EQUIPMENT
X	LOOP TAG USED TO TIE THE PROCESS FLOW DIAGRAM TO A LOOP DIAGRAM

STANDARD VALVE AND PIPING USAGE

PDIT 1	BLOCK/BLEED VALVE ARRANGEMENT
PI 1	INSTRUMENTS WITH VALVE ONLY
PI 1	INSTRUMENTS WITH DIAPHRAGM SEAL
PI 1	INSTRUMENTS WITH ANNULAR SEAL

PANEL DETAIL SYMBOLS

RUN	INDICATING LIGHT -R RED (ACTIVE EQUIPMENT) -G GREEN (EQUIPMENT OFF) -W WHITE (POWER) -B BLUE (CONDITION BACKWASH IN PROGRESS) -A AMBER (ALARM CONDITION)
H/O/A	SWITCH -L/R (LOCAL - REMOTE) -L/O/A (LOCAL - OFF - AUTO) -L/O/R (LOCAL - OFF - REMOTE) -H/O/A (HAND - OFF - AUTO) -H/O/R (HAND - OFF - REMOTE)
START	PUSHBUTTON
	HORN
	BEACON
OIT	OPERATOR INTERFACE TERMINAL

SECURITY SYSTEM SYMBOLS

CCTV	CLOSED CIRCUIT TELEVISION CAMERA
PTZ	PAN, TILT, ZOOM CAMERA

GENERAL ABBREVIATIONS

AI	ANALOG INPUT
AL	ALARM PILOT LIGHT
AO	ANALOG OUTPUT
AS	AIR SUPPLY
ASD	ADJUSTABLE SPEED DRIVE
ASP	APPLICATION SERVICE PROVIDER
BFV	BUTTERFLY VALVE
CCTV	CLOSED CIRCUIT TELEVISION
CH4	METHANE
CL2	CHLORINE
COND	CONDUCTIVITY
COMP	COMPUTER
CP	CONTROL PANEL
CPU	CENTRAL PROCESSING UNIT
CRC	CONTROL ROOM CONSOLE
CTU	CENTRAL TELEMETRY UNIT
DCU	DISTRIBUTED CONTROL UNIT
DI	DIGITAL OR DISCRETE INPUT
DO	DISSOLVED OXYGEN OR DIGITAL OUTPUT
DPU	DISTRIBUTED PROCESSING UNIT
EPP	ETHERNET PATCH PANEL
ES	EMERGENCY STOP
ESW	ETHERNET SWITCH
ETM	ELAPSED TIME METER
FC	FAIL CLOSED
FCP	FIELD CONTROL PANEL
FCS	FILTER CONTROL STATION
FCV	FLOW CONTROL VALVE
FLP	FAIL LAST POSITION
FO	FAIL OPEN
FOPP	FIBER OPTIC PATCH PANEL
FPR	FEEDER PROTECTION RELAY
H2S	HYDROGEN SULFIDE
HMI	HUMAN MACHINE INTERFACE
JB	JUNCTION BOX
IO	INPUT/OUTPUT
IR	INFARED
LAS	LIQUID AMMONIA SULFATE
LCP	LOCAL CONTROL PANEL
LCS	LOCAL CONTROL STATION
LT	LEVEL TRANSMITTER
LPU	LOCAL PROCESSING UNIT
LTS	LOCAL TERMINAL SYSTEM
MC	MOTOR CONTROLLER
NAOCLS	ODIUM HYPOCHLORIDE
NC	NORMALLY CLOSED
NH3	AMMONIA
NIM	NETWORK INTERFACE MODULE
NO	NORMALLY OPEN
MCC	MOTOR CONTROL CENTER
MM	MULTI MODE FIBER OPTIC CABLE
MPR	MOTOR PROTECTION RELAY
OIT	OPERATIONS INTERFACE TERMINAL
OL	OVERLOAD
OWS	OPERATOR WORKSTATION
PB	PUSH BUTTON
PCSI	PROCESS CONTROL SYSTEM INTEGRATOR
pH	HYDROGEN ION
PLC	PROGRAMMABLE LOGIC CONTROLLER
PMCS	PROCESS MONITORING CONTROL SYSTEM
POLY	POLYMER
PQM	POWER QUALITY METER
PS	POWER SUPPLY
PSU	POWER SUPPLY UNIT
PV	PINCH VALVE
RBC	REMOTE BASE CONTROLLER
RIO	REMOTE INPUT OUTPUT
RTU	REMOTE TERMINAL UNIT
SCADA	SUPERVISORY CONTROL AND DATA AQUISITION
SM	SINGLE MODE FIBER OPTIC CABLE
SO2	SULFUR DIOXIDE
SOL	SOLENOID
SPD	SURGE PROTECTION DEVICE
UPS	UNINTERRUPTIBLE POWER SUPPLY
TC	TERMINATION CABINET
TURB	TURBIDITY
VIB	VIBRATION
VFD	VARIABLE FREQUENCY DRIVE
VLV	VALVE

MEANINGS OF IDENTIFICATION LETTERS

THIS TABLE APPLIES ONLY TO THE FUNCTIONAL IDENTIFICATION OF INSTRUMENTS.

	FIRST LETTER		SUCCEEDING LETTERS		
	MEASURED OR INITIATING VARIABLE	MODIFIER	READOUT OR PASSIVE FUNCTION	OUTPUT FUNCTION	MODIFIER
A	ANALYSIS/ANALYTICAL		ALARM		
B	BURNER, COMBUSTION			CLOSE, STOP, DECREASE (1)	
C	CONDUCTIVITY			CONTROL	
D	DENSITY (MASS) OR SPECIFIC GRAVITY	DIFFERENTIAL		OPEN START, INCREASE (1)	
E	VOLTAGE (EMF)		SENSOR (PRIMARY ELEMENT)		
F	FLOW RATE	RATIO (FRACTION)			FAIL (1)
G	GAUGING (DIMENSIONAL)		GLASS VIEWING DEVICE		
H	HAND				HIGH OR OPEN
I	CURRENT (ELECTRICAL)		INDICATE		
J	POWER	SCAN			
K	TIME OR TIME SCHEDULE	TIME RATE OR CHANGE		CONTROL STATION	
L	LEVEL		LIGHT (PILOT)		LOW OR CLOSED
M	MOISTURE, HUMIDITY, MOTOR, MOTION	MOMENTARY		MOTOR (1)	MIDDLE OR INTERMEDIATE
N	USERS CHOICE		USER'S CHOICE		ON OR OPERATE (1)
O	USER'S CHOICE		ORIFICE (RESTRICTION)		OVERLOAD (1)
P	PRESSURE OR VACUUM		POINT (TEST CONNECTION)	PUMP (1)	
Q	QUANTITY (2)	INTEGRATE OR TOTALIZE			
R	RADIATION		RECORD		
S	SPEED OR FREQUENCY	SAFETY		SWITCH	
T	TEMPERATURE			TRANSMIT	
U	MULTIVARIABLE (2)		MULTIFUNCTION (2)	MULTIFUNCTION (2)	MULTIFUNCTION (2)
V	VIBRATION, MECHANICAL ANALYSIS			VALVE, DAMPER OR LOUVER	
W	WEIGHT OR FORCE		WELL		UNCLASSIFIED (2)
X	UNCLASSIFIED (2)	X AXIS	UNCLASSIFIED (2)	UNCLASSIFIED (2)	UNCLASSIFIED (2)
Y	EVENT, STATE, PRESENCE	Y AXIS		RELAY, COMPUTE, CONVERT	
Z	POSITION, DIMENSION	Z AXIS		DRIVE, ACTUATE OR UNCLASSIFIED FINAL CONTROL ELEMENT	

COMMON HMI/INSTRUMENT ISA TAGGING

ABBREVIATION	MEANING
AIT	ANALYTICAL INDICATING TRANSMITTER
AE	ANALYTICAL ELEMENT
AI	CHEMICAL RESIDUAL/INDICATION
CT	CYCLE TIMER
FIT	FLOW INDICATING TRANSMITTER
FE	FLOW ELEMENT
FI	FLOW INDICATION
HS	HAND SWITCH
JAL	POWER ALARM LOW
II	CURRENT INDICATION
LIT	LEVEL INDICATING TRANSMITTER
LE	LEVEL ELEMENT
LI	LEVEL INDICATION
LSH	LEVEL SWITCH HIGH
LSL	LEVEL SWITCH LOW
LAL	LEVEL ALARM LOW
LAH	LEVEL ALARM HIGH
PIT	PRESSURE INDICATING TRANSMITTER
PE	PRESSURE ELEMENT
PI	PRESSURE INDICATION
PSH	PRESSURE SWITCH HIGH
PSL	PRESSURE SWITCH LOW
SI	SPEED INDICATION
SIC	SPEED INDICATING CONTROLLER
TIT	TEMPERATURE INDICATING TRANSMITTER
TE	TEMPERATURE ELEMENT
TI	TEMPERATURE INDICATION
TSH	TEMPERATURE SWITCH HIGH
WIT	WEIGHT INDICATING TRANSMITTER
WE	WEIGHT ELEMENT
WI	WEIGHT INDICATION
XA	FAULT ANNUNCIATION
YL	MISC. EVENT LIGHT (IN REMOTE)

COMMON HMI/INSTRUMENT ISA TAGGING

ABBREVIATION	MEANING
ZCH	OPEN GATE/VALVE
ZCL	CLOSE GATE/VALVE
ZSH	POSITION SWITCH HIGH
ZSL	POSITION SWITCH LOW
ZLH	VALVE/GATE OPEN
ZLL	VALVE/GATE CLOSED
ZIT	POSITION INDICATING TRANSMITTER

NO.	DATE	REVISIONS	APP.

KGI Kalluri Group, Inc.
TBPE Registration No. F-665
16300 Katy Freeway, Suite 172
Houston, Texas 77094
Phone: (713)-365-9288
PROJECT 4285

QUIDDITY
Texas Board of Professional Engineers and Land Surveyors Reg. No. F-23290
6330 West Loop South, Suite 150 • Bellaire, TX 77401 • 713.777.5337

JOB NO: 00050-0099-01 DATE: 5/7/2026

APPROVED BY: RK
DATE: 05/2026
DESIGNED BY: SLJ
DRAWN BY: RHW
SURVEYED BY: WESTERN GROUP CONSULTANTS
FB NO. P-6414

STATE OF TEXAS
STACY L. JORDAN
148233
LICENSED PROFESSIONAL ENGINEER
06.12.2026

CITY OF HOUSTON
HOUSTON PUBLIC WORKS

SCOTT STREET NO. 1 LIFT STATION REHABILITATION
INSTRUMENTATION
INSTRUMENTATION LEGENDS & SYMBOLS SHEET 2

WBS NUMBER: R-000267-127A-4
DRAWING SCALE: AS NOTED
CITY OF HOUSTON PM: TAHA LOTIA
DWG NO. 0-I-02
SHEET NO. 185 OF 220

FOR CITY OF HOUSTON USE ONLY

F:\Users\KGI-StacyJordan\Kalluri Group, Inc\KGI - Documents\4285-QEL (Scott Street LS)\Drawings\Instrumentation\0-I-02 INSTRUMENTATION LEGENDS & SYMBOLS 2.dwg

ORIGINAL SCALE IN INCHES FOR REDUCED PLANS

NO.	DATE	REVISIONS	APP.

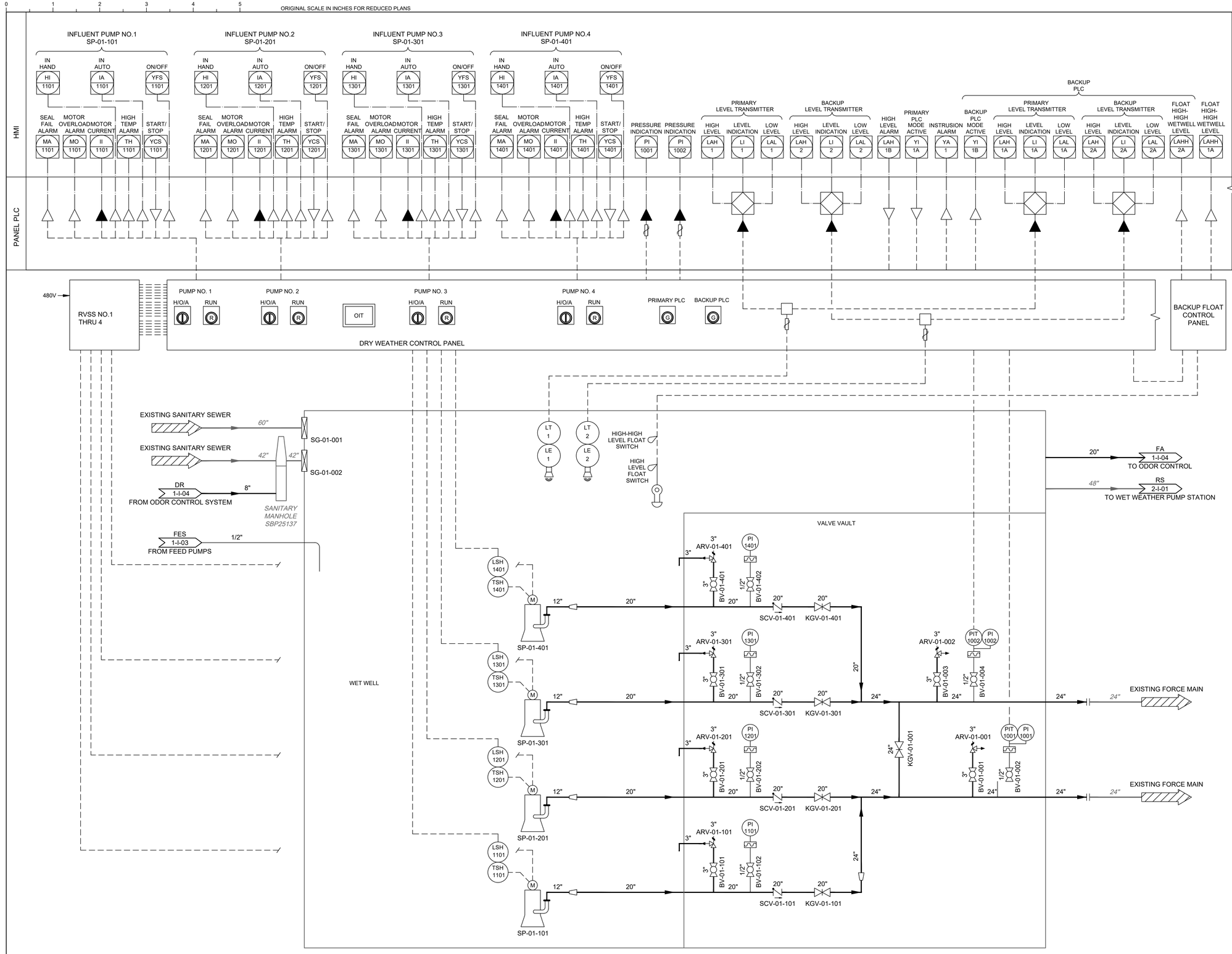

KGI Kalluri Group, Inc.
TBPE Registration No. F-665
16300 Katy Freeway, Suite 172
Houston, Texas 77094
Phone: (713)-365-9288
PROJECT 4285

QUIDDITY
Texas Board of Professional Engineers and Land Surveyors Reg. No. F-23290
6330 West Loop South, Suite 150 • Bellaire, TX 77401 • 713.777.5337

JOB NO: 00050-0099-01 DATE: 5/7/2026

APPROVED BY: RK

DATE: 05/2026

DESIGNED BY: SLJ

DRAWN BY: RHW

SURVEYED BY: WESTERN GROUP CONSULTANTS
FB NO. P-6414

STATE OF TEXAS
STACY L. JORDAN
148233
LICENSED
PROFESSIONAL ENGINEER
05.12.2026

CITY OF HOUSTON
HOUSTON PUBLIC WORKS

SCOTT STREET NO. 1 LIFT STATION REHABILITATION
INSTRUMENTATION

DRY WEATHER STATION P&ID

WBS NUMBER	FOR CITY OF HOUSTON USE ONLY
R-000267-127A-4	
DRAWING SCALE	
AS NOTED	
CITY OF HOUSTON PM	
TAHA LOTIA	
DWG NO. 1-I-01	
SHEET NO. 186 OF 220	

F:\Users\KGI-StacyJordan\Kalluri Group, Inc\KGI - Documents\4285-QEL (Scott Street LS)\Drawings\Instrumentation\1-I-01 Dry Weather Pump Station P&ID.dwg

ORIGINAL SCALE IN INCHES FOR REDUCED PLANS

NO.	DATE	REVISIONS	APP.

HMI

PANEL PLC

BACKUP PLC

ALARMS RESET	ALARMS RESET	PUMP NO. 1 START/ STOP	PUMP NO. 2 START/ STOP	PUMP NO. 3 START/ STOP	PUMP NO. 4 START/ STOP	PHASE FAILURE UNDER VOLTAGE	PHASE FAILURE UNDER VOLTAGE	CONTAINMENT HIGH LEVEL	TANK SWT-03-101 LEVEL	TANK SWT-03-201 LEVEL	TANK SWT-03-301 LEVEL	EMERGENCY SHOWER ACTIVE
YCS 1	RE 1	YCS 1A	YCS 2A	YCS 3A	YCS 4A	JA 2	JA 1	LAH 03101	LI 03101	LI 03201	LI 03301	FA 03101

ALARM RESET

CONTINUATION OF DRY WEATHER CONTROL PANEL

480V

MCC-1

PROPOSED ELECTRICAL BUILDING

120V

LI 03101 | LI 03201 | LI 03301

LEVEL PANEL

MQC-03-001 — 2" — BV-03-001 — 2" — WS-03-001 — 2" — BCV-03-001

BV-03-101 — LIT 03101 — LE 03101 — 8" VENT — FERROUS SULFATE STORAGE TANK SWT-03-101

BV-03-201 — LIT 03201 — LE 03201 — 8" VENT — FERROUS SULFATE STORAGE TANK SWT-03-201

BV-03-301 — LIT 03301 — LE 03301 — 8" VENT — FERROUS SULFATE STORAGE TANK SWT-03-301

BV-03-102

BV-03-202

BV-03-302

BV-03-103 — BV-03-104

BV-03-203 — BV-03-204

BV-03-303 — BV-03-304

DRAIN TO SUMP

HIGH LEVEL FLOAT SWITCH

CHEMICAL TANK CONTAINMENT

FES 1-I-03 TO FEED PUMPS

FES 1-I-03 TO FEED PUMPS

BFV-03-001

DR 1-I-04 TO ODOR CONTROL SYSTEM

FS 03101

120V

EMERGENCY EYEWASH STATION

F:\Users\KGI-StacyJordan\Kalluri Group, Inc\KGI - Documents\4285-QEL (Scott Street LS)\Drawings\Instrumentation\1-I-02 Chemical Storage Tanks P&ID.dwg

KGI Kalluri Group, Inc.

TBPE Registration No. F-665
16300 Katy Freeway, Suite 172
Houston, Texas 77094
Phone: (713)-365-9288
PROJECT 4285

QUIDDITY
Texas Board of Professional Engineers and Land Surveyors Reg. No. F-23290
6330 West Loop South, Suite 150 • Bellaire, TX 77401 • 713.777.5337

JOB NO: 00050-0099-01 DATE: 5/7/2026

APPROVED BY: RK

DATE: 05/2026

DESIGNED BY: SLJ

DRAWN BY: RHW

SURVEYED BY: WESTERN GROUP CONSULTANTS
FB NO. P-6414

STATE OF TEXAS — STACY L. JORDAN — 148233 — LICENSED PROFESSIONAL ENGINEER — 05.12.2026

CITY OF HOUSTON
HOUSTON PUBLIC WORKS

SCOTT STREET NO. 1 LIFT STATION REHABILITATION
INSTRUMENTATION

CHEMICAL STORAGE TANKS P&ID

WBS NUMBER
R-000267-127A-4
DRAWING SCALE
AS NOTED
CITY OF HOUSTON PM
TAHA LOTIA
DWG NO. 1-I-02
SHEET NO. 187 OF 220

FOR CITY OF HOUSTON USE ONLY

0 1 2 3 4 5 ORIGINAL SCALE IN INCHES FOR REDUCED PLANS

NO.	DATE	REVISIONS	APP.

HMI

PANEL PLC

FES METERING PUMP NO. 1
DP-03-101

FES METERING PUMP NO. 2
DP-03-201

METERING PUMP START/ STOP HS 03101
METERING PUMP FAULT XA 03101
METERING PUMP SPEED SETPOINT SP 03101
METERING PUMP SPEED FEEDBACK SI 03101
METERING PUMP START/ STOP HS 03201
METERING PUMP FAULT XA 03201
METERING PUMP SPEED SETPOINT SP 03201
METERING PUMP SPEED FEEDBACK SI 03201
EMERGENCY SHOWER ACTIVE FA 03201

CONTINUATION OF DRY WEATHER CONTROL PANEL

MANUFACTURER SKID

MANUFACTURER SKID

HS 03201 XA 03201 SIC 03201 SIT 03201
120V
CONTROL PANEL

CC-03-001

FES 1-I-02 FROM CHEMICAL STORAGE 1-1/2"

1" BV-03-005

DP-03-201

1" BCV-03-201

1" BPV-03-201

1" BV-03-206

1" UN-03-002

1" 1/2" 1/2"

FES 1-I-01 TO DRY WEATHER LIFT STATION

1" BV-03-205

1-1/2" 1" 1" UN-03-001

1" BV-03-004

1" BV-03-105

HS 03101 XA 03101 SIC 03101 SIT 03101
120V
CONTROL PANEL

FES 1-I-02 FROM CHEMICAL STORAGE 1-1/2"

DP-03-101

1" BCV-03-101

1" BPV-03-101

1" BV-03-106

1"

CHEMICAL TANK CONTAINMENT

FS 03201

120V

EMERGENCY EYEWASH STATION

4"

4" DR 1-I-04 TO ODOR CONTROL SYSTEM

KGI Kalluri Group, Inc.

TBPE Registration No. F-665
16300 Katy Freeway, Suite 172
Houston, Texas 77094
Phone: (713)-365-9288
PROJECT 4285

QUIDDITY

Texas Board of Professional Engineers and Land Surveyors Reg. No. F-23290
6330 West Loop South, Suite 150 • Bellaire, TX 77401 • 713.777.5337

JOB NO: 00050-0099-01 DATE: 5/7/2026

APPROVED BY: RK

DATE: 05/2026

DESIGNED BY: SLJ

DRAWN BY: RHW

SURVEYED BY: WESTERN GROUP CONSULTANTS
FB NO. P-6414

STATE OF TEXAS
STACY L. JORDAN
148233
LICENSED PROFESSIONAL ENGINEER
06.12.2026

CITY OF HOUSTON
HOUSTON PUBLIC WORKS

SCOTT STREET NO. 1 LIFT STATION REHABILITATION

INSTRUMENTATION

CHEMICAL METERING P&ID

WBS NUMBER	FOR CITY OF HOUSTON USE ONLY
R-000267-127A-4	
DRAWING SCALE	
AS NOTED	
CITY OF HOUSTON PM	
TAHA LOTIA	
DWG NO. 1-I-03	
SHEET NO. 188 OF 220	

F:\Users\KGI-StacyJordan\Kalluri Group, Inc\KGI - Documents\4285-QEL (Scott Street LS)\Drawings\Instrumentation\1-I-03 Chemical Metering P&ID.dwg

ORIGINAL SCALE IN INCHES FOR REDUCED PLANS

NO.	DATE	REVISIONS	APP.

HMI

PANEL PLC

RECIRCULATION PUMP NO. 1 SPP-04-101 — IN AUTO IA 4101A; START/STOP YCS 4101A; ON/OFF YFS 4101A; MOTOR OVERLOAD ALARM MO 4101A

RECIRCULATION PUMP NO. 2 SPP-04-201 — IN AUTO IA 4201A; START/STOP YCS 4201A; ON/OFF YFS 4201A; MOTOR OVERLOAD ALARM MO 4201A

NUTRIENT FEED PUMP NO. 1 FP-04-101 — IN AUTO IA 4101B; START/STOP YCS 4101B; ON/OFF YFS 4101B; MOTOR OVERLOAD ALARM MO 4101B

NUTRIENT FEED PUMP NO. 2 FP-04-201 — IN AUTO IA 4201B; START/STOP YCS 4201B; ON/OFF YFS 4201B; MOTOR OVERLOAD ALARM MO 4201B

ODOR CONTROL BLOWER NO. 1 B-04-101 — IN AUTO IA 4101C; START/STOP YCS 4101C; ON/OFF YFS 4101C; MOTOR OVERLOAD ALARM MO 4101C

ODOR CONTROL BLOWER NO. 2 B-04-201 — IN AUTO IA 4201C; START/STOP YCS 4201C; ON/OFF YFS 4201C; MOTOR OVERLOAD ALARM MO 4201C

VENTING VALVE NO. 1 BFV-04-101 — VALVE IN REMOTE XI 4101D; VALVE FAULT XA 4101D; VALVE OPEN/CLOSE CMD YCO 4101D; VALVE POSITION CLOSED ZIC 4101D; VALVE POSITION OPEN ZIO 4101D

VENTING VALVE NO. 2 BFV-04-102 — VALVE IN REMOTE XI 4102D; VALVE FAULT XA 4102D; VALVE OPEN/CLOSE CMD YCO 4102D; VALVE POSITION CLOSED ZIC 4102D; VALVE POSITION OPEN ZIO 4102D

CARBON SCRUBBER VALVE NO. 1 BFV-04-103 — VALVE IN REMOTE XI 4103D; VALVE FAULT XA 4103D; VALVE OPEN/CLOSE CMD YCO 4103D; VALVE POSITION CLOSED ZIC 4103D; VALVE POSITION OPEN ZIO 4103D

CARBON SCRUBBER VALVE NO. 2 BFV-04-104 — VALVE IN REMOTE XI 4104D; VALVE FAULT XA 4104D; VALVE OPEN/CLOSE CMD YCO 4104D; VALVE POSITION CLOSED ZIC 4104D; VALVE POSITION OPEN ZIO 4104D

SYSTEM FAULT XA 4100

480V — OIT — PLC

ODOR CONTROL SYSTEM ELECTRICAL CONTROL PANEL

RECIRCULATION PUMP NO. 1 SPP-04-101 — H/O/A; RUN R; OFF G; FAIL A

RECIRCULATION PUMP NO. 2 SPP-04-201 — H/O/A; RUN R; OFF G; FAIL A

NUTRIENT FEED PUMP NO. 1 FP-04-101 — H/O/A; RUN R; OFF G; FAIL A

NUTRIENT FEED PUMP NO. 2 FP-04-201 — H/O/A; RUN R; OFF G; FAIL A

ODOR CONTROL BLOWER NO. 1 B-04-101 — H/O/A; RUN R; OFF G; FAIL A; VFD

ODOR CONTROL BLOWER NO. 2 B-04-201 — H/O/A; RUN R; OFF G; FAIL A; VFD

VENTING VALVE NO. 1 BFV-04-101 — C/A/O; OPEN R; CLOSED G

VENTING VALVE NO. 2 BFV-04-201 — C/A/O; OPEN R; CLOSED G

CARBON SCRUBBER VALVE NO. 1 BFV-04-301 — C/A/O; OPEN R; CLOSED G

CARBON SCRUBBER VALVE NO. 2 BFV-04-401 — C/A/O; OPEN R; CLOSED G

SYSTEM FAULT A

EXISTING PLANT WATER — 2" — BV-001 — 2" — 2" — BV-002

NUTRIENT TANK

WATER PANEL — 120V — NUTRIENT PUMP — NUTRIENT PUMP — 1-1/2" — 1"

FA 1-I-01 FROM DRY WEATHER LIFT STATION — 20" — 30"

FA 2-I-01 FROM WET WEATHER LIFT STATION — 24" — 30"

BIOLOGICAL ODOR CONTROL SYSTEM — 2" — 4"

PI 01 — 1/2" BV-04-102 — 2" — SCV-04-101 — 2" BV-04-103 — 2" BV-04-101 — SPP-04-101

PI 02 — 1/2" BV-04-202 — 2" — SCV-04-201 — 2" BV-04-203 — 2" BV-04-201 — SPP-04-201

DR 1-I-01 TO DRY WEATHER PUMP STATION — 8" — 8" — 6" — 8" — 6"

DR 1-I-02 FROM CHEMICAL STORAGE TANKS — 6"

DR 1-I-03 FROM CHEMICAL METERING — 4" — 6"

H2S MONITOR — 120V — 3/8" — BV-04-004 — 3/8" — BV-04-005 — 3/8"

B-04-101 — LOR HS 4101A; OSC HS 4101B — 480V E — 30" — BFV-04-101 — LOR HS 4103A; OSC HS 4103B — 480V E — 30" — BFV-04-103

B-04-201 — LOR HS 4102A; OSC HS 4102B — 480V E — 30" — BFV-04-102 — LOR HS 4104A; OSC HS 4104B — 480V E — 30" — BFV-04-104

CARBON SCRUBBER — 2" — BV-04-006

KGI Kalluri Group, Inc.
TBPE Registration No. F-665
16300 Katy Freeway, Suite 172
Houston, Texas 77094
Phone: (713)-365-9288
PROJECT 4285

QUIDDITY
Texas Board of Professional Engineers and Land Surveyors Reg. No. F-23290
6330 West Loop South, Suite 150 • Bellaire, TX 77401 • 713.777.5337

JOB NO: 00050-0099-01 DATE: 5/7/2026

APPROVED BY: RK

DATE: 05/2026

DESIGNED BY: SLJ

DRAWN BY: RHW

SURVEYED BY: WESTERN GROUP CONSULTANTS
FB NO. P-6414

STATE OF TEXAS — STACY L. JORDAN — 148233 — LICENSED PROFESSIONAL ENGINEER — 05.12.2026

CITY OF HOUSTON
HOUSTON PUBLIC WORKS

SCOTT STREET NO. 1 LIFT STATION REHABILITATION
INSTRUMENTATION

ODOR CONTROL SYSTEM P&ID

WBS NUMBER	FOR CITY OF HOUSTON USE ONLY
R-000267-127A-4	
DRAWING SCALE	
AS NOTED	
CITY OF HOUSTON PM	
TAHA LOTIA	
DWG NO. 1-I-04	
SHEET NO. 189 OF 220	

F:\Users\KGI-StacyJordan\Kalluri Group, Inc\KGI - Documents\4285-QEL (Scott Street LS)\Drawings\Instrumentation\1-I-04 Odor Control System P&ID.dwg

ORIGINAL SCALE IN INCHES FOR REDUCED PLANS

EQUIPMENT AND DEVICE SCHEDULE

ITEM	QUANTITY	DESCRIPTION
A	2	SINGLE CHANNEL INTRINSICALLY SAFE RELAY
B	2	ANALOG SIGNAL DUPLICATING ISOLATOR
C	8	PUMP PROTECTION MODULE
D	1	CISCO MERAKI CELLULAR GATEWAY
E	4	HAND-OFF-AUTO SWITCH, 3 POSITION, HEAVY-DUTY OIL TIGHT WITH 2 SETS OF CONTACT BLOCKS (PUMP CONTROL)
F	4	INDICATING LIGHT, HEAVY DUTY, OIL TIGHT, RED, 24VDC, LED, WITH "RUN" LEGEND
G	1	6 OUTLET POWER STRIP
H	1	SWITCH FOR CABINET LIGHT, 120V, 20A, SPST
I	2	DUPLEX RECEPTACLE, 120V, 20A, 2 WIRE, GROUNDED, GFCI TYPE
J	1	24" LED STRIP LIGHT 120V SUITABLE FOR ZERO DEGREE OPERATION
K	*	NAMEPLATES, SEE SPECIFICATIONS (SEE NAMEPLATE SCHEDULE BELOW)
L	2	PROGRAMMABLE LOGIC CONTROLLER WITH SIGNAL EXPANSION MODULES
M	*	CONTROL RELAY 24VDC RELAY WITH THREE FORM C CONTACTS AND 11 PIN SOCKET BASE
N		FLASHER RELAY
O	1	1 POLE FUSE HOLDER
	1	3 AMP FUSE
P	1	NEMA 12 GASKETED STEEL ENCLOSURES 72"H x 24"D x WIDTH AS REQUIRED
Q	*	TERMINAL BLOCK
R	*	WIRE DUCT 3" DEEP MINIMUM WIDTH AS REQUIRED (20% WIRE FILL MAX)
S	1	GROUND BUS BAR
T	1	ETHERNET SWITCH
U	1	FAN THERMOSTAT
V	1	PUSHBUTTON, BLACK WITH RESET LEGEND
W	1	NOT USED
X	*	FUSED TERMINAL BLOCKS
Y	1	POWER SURGE PROTECTOR - CONTROL POWER
Z	1	PROGRAMMING SCREEN (HMI)
AA		NOT USED
BB	1	120VAC-24VDC POWER SUPPLY, 5A
CC	3	DISCRETE I/O SURGE SUPRESSOR
DD	2	INDICATING LIGHT, HEAVY DUTY, OILTIGHT, GREEN, 24VDC, LED WITH "BACKUP PLC" & "PRIMARY PLC" LEGEND
EE	6	ANALOG I/O SURGE SUPRESSOR
FF	1	FAN
	1	EXHAUST GRILL

* AS SCHEDULED

NAMEPLATE SCHEDULE

N1	SAGEMONT LIFT STATION	N7	PRIMARY PLC
N2	PUMP NO.1	N8	BACKUP PLC
N3	PUMP NO.2	N9	MOTOR DATA
N4	PUMP NO.3		HORSEPOWER (OUTPUT) ----------
N5	PUMP NO.4		RPM AT FULL LOAD ----------
N6	PROGRAMMING SCREEN		TIME RATING ----------
			FREQUENCY ----------
			NUMBER OF PHASES ----------
			MODEL NUMBER ----------
			RATED VOLTAGE ----------
			SERVICE FACTOR ----------
			FULL LOAD AMPS ----------
			INSULATION CLASS ----------
			NEMA DESIGN LETTER ----------
			DATE OF MANUFACTURE ----------
			THERMO PROTECTION (IF REQUIRED)--------
			MOISTURE PROTECTION (IF REQUIRED)-------

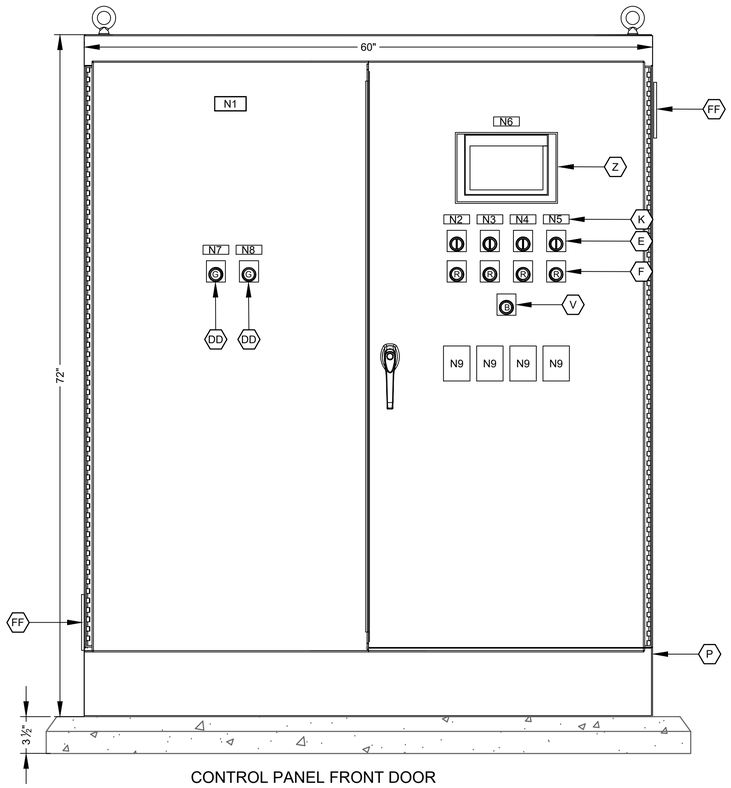

CONTROL PANEL FRONT DOOR

ELEVATION

NTS

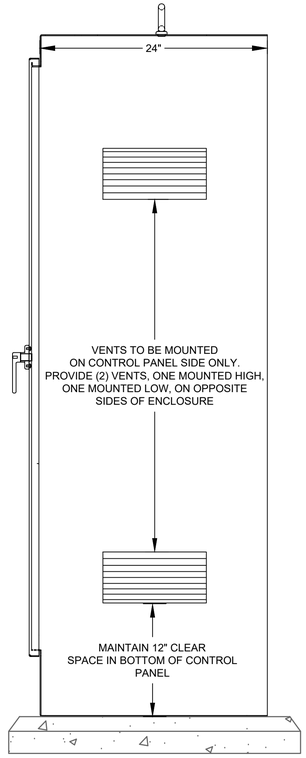

CONTROL PANEL SIDE VIEW

ELEVATION

NTS

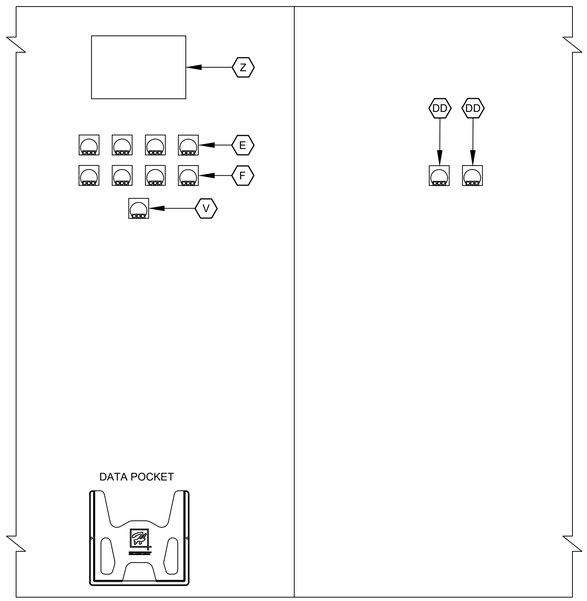

CONTROL PANEL BACK DOOR

ELEVATION

NTS

NO.	DATE	REVISIONS	APP.

GENERAL NOTES:

A. NAMEPLATES SHALL BE MOUNTED TO PANELS USING STAINLESS STEEL HARDWARE.

B. CONTROL PANEL SHALL BE UL698A LISTED ENCLOSED INDUSTRIAL CONTROL PANEL.

C. REFER TO SPECIFICATION 13325 & 13327 FOR ADDITIONAL INFORMATION.

KGI Kalluri Group, Inc.
TBPE Registration No. F-665
16300 Katy Freeway, Suite 172
Houston, Texas 77094
Phone: (713)-365-9288
PROJECT 4285

QUIDDITY
Texas Board of Professional Engineers and Land Surveyors Reg. No. F-23290
6330 West Loop South, Suite 150 • Bellaire, TX 77401 • 713.777.5337

JOB NO: 00050-0099-01 DATE: 5/7/2026

APPROVED BY: RK

DATE: 05/2026

DESIGNED BY: SLJ

DRAWN BY: RHW

SURVEYED BY: WESTERN GROUP CONSULTANTS
FB NO. P-6414

STATE OF TEXAS
STACY L. JORDAN
148233
LICENSED
PROFESSIONAL ENGINEER
9.12.2025

CITY OF HOUSTON
HOUSTON PUBLIC WORKS

SCOTT STREET NO. 1 LIFT STATION REHABILITATION
INSTRUMENTATION

DRY WEATHER CONTROL CABINET EQUIPMENT LAYOUT & SCHEDULE

WBS NUMBER	FOR CITY OF HOUSTON USE ONLY
R-000267-127A-4	
DRAWING SCALE	
AS NOTED	
CITY OF HOUSTON PM	
TAHA LOTIA	
DWG NO. 1-I-05	
SHEET NO. 190 OF 220	

F:\Users\KGI-StacyJordan\Kalluri Group, Inc\KGI - Documents\4285-QEL (Scott Street LS)\Drawings\Instrumentation\1-I-05 Dry Weather Control Cabinet Equipment Layout & Schedule.dwg

0 1 2 3 4 5 ORIGINAL SCALE IN INCHES FOR REDUCED PLANS

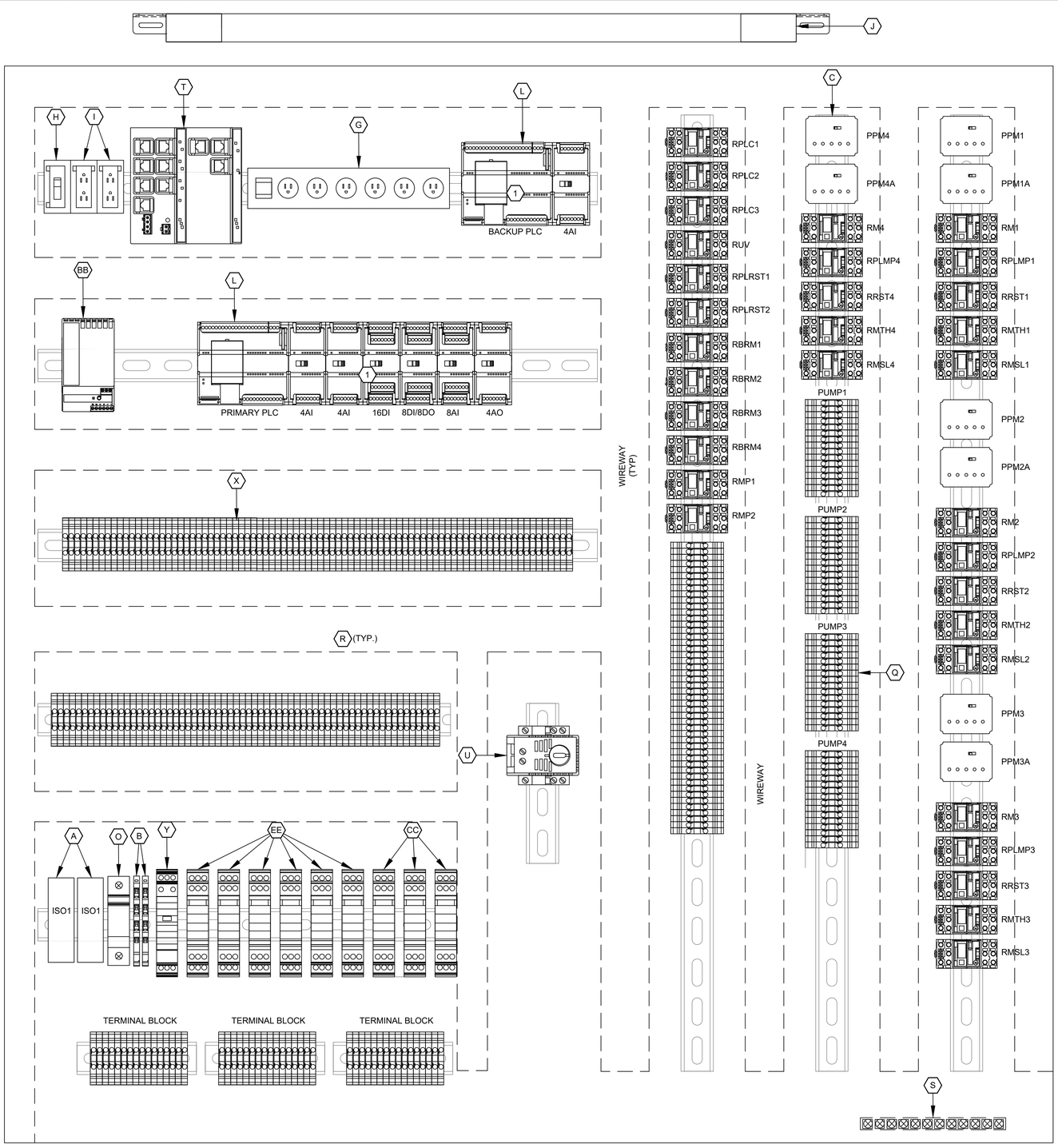

CONTROL PANEL INTERIOR

ELEVATION

NTS

NO.	DATE	REVISIONS	APP.

GENERAL NOTES:

A. CONTROL PANEL SHALL BE UL508A LISTED ENCLOSED INDUSTRIAL CONTROL PANEL. PANEL SHALL BE DESIGNED, CONSTRUCTED AND INSTALLED IN ACCORDANCE WITH NEC AND UL STANDARDS.

B. REFER TO SPECIFICATION 13325 & 13327 FOR ADDITIONAL INFORMATION.

C. LAYOUT SHOWN FOR REFERENCE ONLY. CONTRACTOR SHALL BE RESPONSIBLE FOR FINAL LAYOUT AND QUANTITIES.

KEYED NOTES:

(1) CONTRACTOR SHALL REFER TO THE P&IDS AND THE CONTROL WIRING DIAGRAMS TO CONFIRM THE I/O CARDS REQUIRED TO PROVIDE ALL THE I/O POINTS ALONG WITH THE SPARES FOR BOTH THE PRIMARY & BACKUP PLC.

LEGEND	
TAG	DESCRIPTION
PPM	PUMP PROTECTION MODULE
RBRM	BACKUP SYSTEM RUN RELAY
RM	PUMP RUN AUX RELAY
RPLMP	PLC RUN PUMP RELAY
RRST	PUMP RESET AUX RELAY
RMTH	MOTOR HIGH TEMPERATURE ALARM RELAY
RMSL	MOTOR SEAL LEAK ALARM RELAY
RPLC	PLC MODE AUX RELAY
RUV	UNDER VOLTAGE RELAY
RPLRST	PLC RESET RELAY
ISO	INTRINSICALLY SAFE RELAY
RMP	METERING PUMP CONTROL RELAY

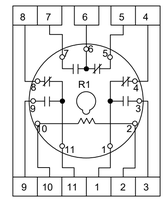

RELAY ITEM

DETAIL

NTS

KGI Kalluri Group, Inc.
TBPE Registration No. F-665
16300 Katy Freeway, Suite 172
Houston, Texas 77094
Phone: (713)-365-9288
PROJECT 4285

QUIDDITY
Texas Board of Professional Engineers and Land Surveyors Reg. No. F-23290
6330 West Loop South, Suite 150 • Bellaire, TX 77401 • 713.777.5337

JOB NO: 00050-0099-01 DATE: 5/7/2026

APPROVED BY: RK

DATE: 05/2026

DESIGNED BY: SLJ

DRAWN BY: RHW

SURVEYED BY: WESTERN GROUP CONSULTANTS
FB NO. P-6414

STATE OF TEXAS
STACY L. JORDAN
148233
LICENSED PROFESSIONAL ENGINEER
5/7/2026

CITY OF HOUSTON
HOUSTON PUBLIC WORKS

SCOTT STREET NO. 1 LIFT STATION REHABILITATION
INSTRUMENTATION
DRY WEATHER CONTROL CABINET EQUIPMENT LAYOUT

WBS NUMBER	FOR CITY OF HOUSTON USE ONLY
R-000267-127A-4	
DRAWING SCALE	
AS NOTED	
CITY OF HOUSTON PM	
TAHA LOTIA	
DWG NO. 1-I-06	
SHEET NO. 191 OF 220	

F:\Users\KGI-Stacy.Jordan\Kalluri Group, Inc\KGI - Documents\4285-QEL (Scott Street LS)\Drawings\Instrumentation\1-I-06 Dry Wet Weather Control Cabinet Equipment Layout.dwg

ORIGINAL SCALE IN INCHES FOR REDUCED PLANS

FIELD | DOOR | DRY WEATHER LIFT STATION CONTROL PANEL: INTERIOR PANEL | PLC

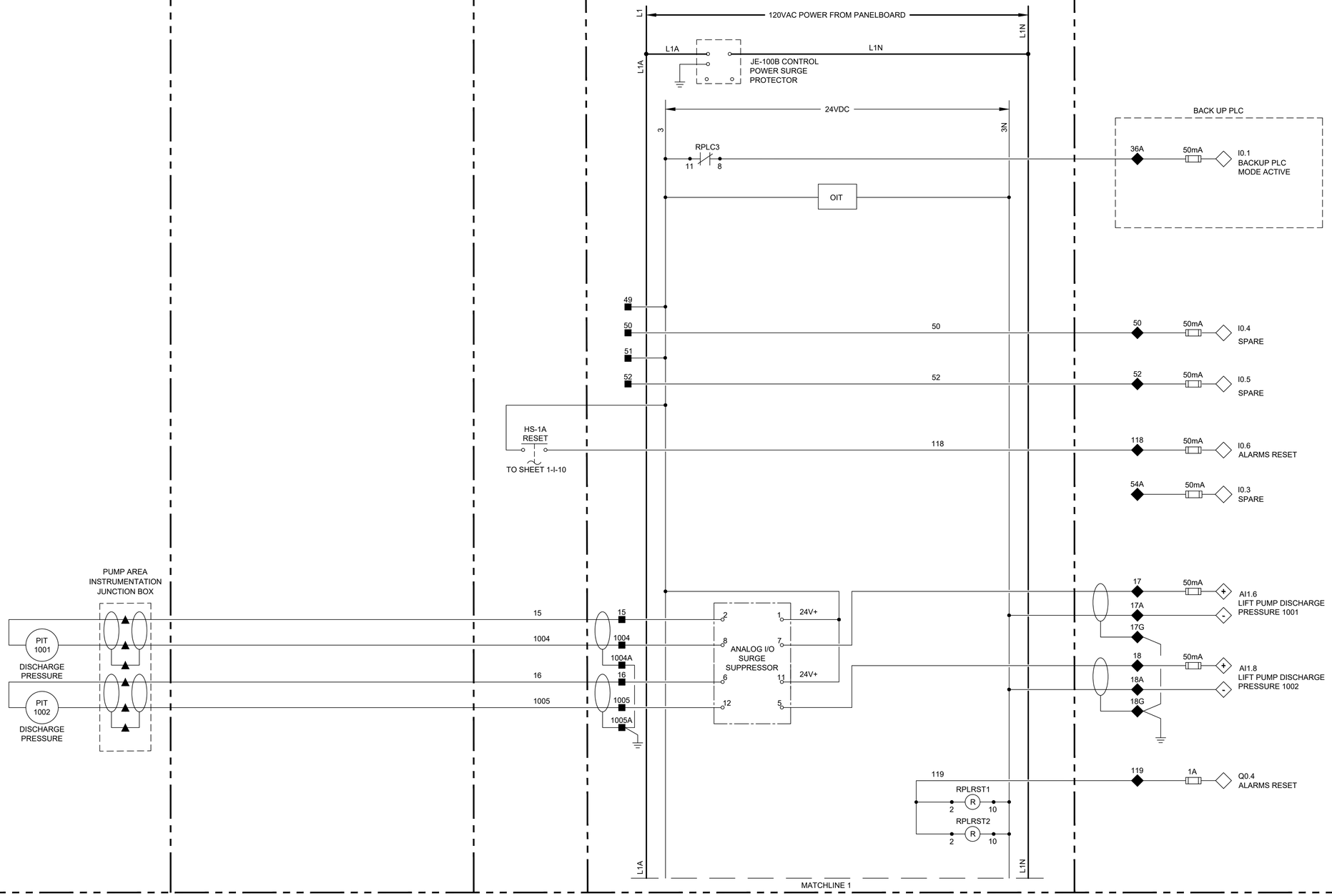

LEGEND

- △ DEVICE OR FIELD TERMINAL LOCATED AT MOTOR
- ✱ DEVICE OR FIELD TERMINAL LOCATED REMOTE
- □ DEVICE OR FIELD TERMINAL LOCATED AT MCC/POWER PANEL
- ■ FIELD TERMINAL LOCATED AT CONTROL PANEL
- ▲ REMOTE TERMINAL
- ● DEVICE TERMINAL NO.
- ◆ PLC INTERFACE TERMINAL

NO.	DATE	REVISIONS	APP.

KGI Kalluri Group, Inc.

TBPE Registration No. F-665
16300 Katy Freeway, Suite 172
Houston, Texas 77094
Phone: (713)-365-9288

PROJECT 4285

QUIDDITY

Texas Board of Professional Engineers and Land Surveyors Reg. No. F-23290
6330 West Loop South, Suite 150 • Bellaire, TX 77401 • 713.777.5337

JOB NO: 00050-0099-01 DATE: 5/7/2026

APPROVED BY: RK

DATE: 05/2026

DESIGNED BY: SLJ

DRAWN BY: RHW

SURVEYED BY: WESTERN GROUP CONSULTANTS
FB NO. P-6414

STATE OF TEXAS
STACY L. JORDAN
148233
LICENSED PROFESSIONAL ENGINEER
05.12.2026

CITY OF HOUSTON
HOUSTON PUBLIC WORKS

SCOTT STREET NO. 1
LIFT STATION REHABILITATION
INSTRUMENTATION
DRY WEATHER CONTROL PANEL
CONTROL WIRING DIAGRAM - I

WBS NUMBER	FOR CITY OF HOUSTON USE ONLY
R-000267-127A-4	
DRAWING SCALE	
AS NOTED	
CITY OF HOUSTON PM	
TAHA LOTIA	
DWG NO. 1-I-07	
SHEET NO. 192 OF 220	

F:\Users\KGI-StacyJordan\Kalluri Group, Inc\KGI - Documents\4285-QEL (Scott Street LS)\Drawings\Instrumentation\1-I-07 Dry Weather Control Panel Control Wiring Diagram - I.dwg

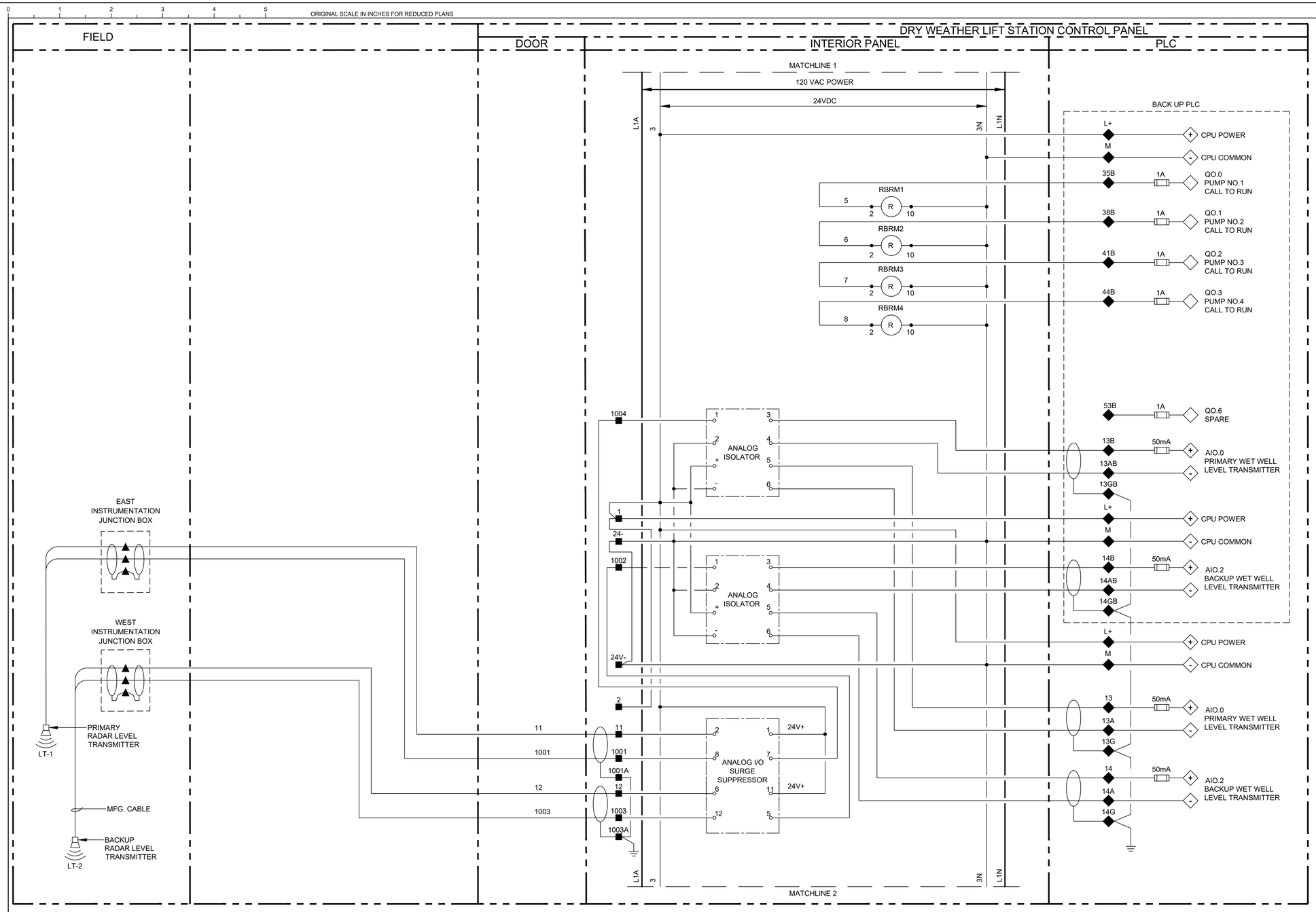

LEGEND

- △ DEVICE OR FIELD TERMINAL LOCATED AT MOTOR
- ★ DEVICE OR FIELD TERMINAL LOCATED REMOTE
- □ DEVICE OR FIELD TERMINAL LOCATED AT MCC/POWER PANEL
- ■ FIELD TERMINAL LOCATED AT CONTROL PANEL
- ▲ REMOTE TERMINAL
- ● DEVICE TERMINAL NO.
- ◆ PLC INTERFACE TERMINAL

NO.	DATE	REVISIONS	APP.

KGI Kalluri Group, Inc.
TBPE Registration No. F-665
16300 Katy Freeway, Suite 172
Houston, Texas 77094
Phone: (713)-365-9288
PROJECT 4285

QUIDDITY
Texas Board of Professional Engineers and Land Surveyors Reg. No. F-23290
6330 West Loop South, Suite 150 • Bellaire, TX 77401 • 713.777.5337

JOB NO: 00050-0099-01 DATE: 5/7/2026

APPROVED BY: RK
DATE: 05/2026
DESIGNED BY: SLJ
DRAWN BY: RHW
SURVEYED BY: WESTERN GROUP CONSULTANTS
FB NO. P-6414

STATE OF TEXAS
STACY L. JORDAN
148233
LICENSED PROFESSIONAL ENGINEER
06.12.2026

CITY OF HOUSTON
HOUSTON PUBLIC WORKS

SCOTT STREET NO. 1
LIFT STATION REHABILITATION
INSTRUMENTATION
DRY WEATHER CONTROL PANEL CONTROL WIRING DIAGRAM - II

WBS NUMBER: R-000267-127A-4
DRAWING SCALE: AS NOTED
CITY OF HOUSTON PM: TAHA LOTIA
DWG NO. 1-I-08
SHEET NO. 193 OF 220

FOR CITY OF HOUSTON USE ONLY

F:\Users\KGI-StacyJordan\Kalluri Group, Inc\KGI - Documents\4285-QEL (Scott Street LS)\Drawings\Instrumentation\1-I-08 Dry Weather Control Panel Control Wiring Diagram - II.dwg

ORIGINAL SCALE IN INCHES FOR REDUCED PLANS

FIELD | MOTOR CONTROL CENTER | DOOR | DRY WEATHER LIFT STATION CONTROL PANEL: INTERIOR PANEL | PLC

MATCHLINE 2

120VAC POWER

24VDC

L1A

3

3N

L1N

1M — DI COMMON

2M — AI COMMON

1L — DO POWER

3 — DO POWER

30 — 1A — Q0.0 SPARE

32 — 50mA — I0.0 PLC INTRUSION ALARM

L1

N

MS

INTRUSION SWITCH

L1

N

MS

INSTRUSION SWITCH

POWER MONITOR

L

N

CAT 5

ETHERNET SWITCH

CAT 5

PROFINET COMM.

34 — 50mA — I0.1 PHASE FAILURE UNDER VOLTAGE

RUV

2 — R — 10

38 — 50mA — Q0.1 PLC MODE ACTIVE

RPLC1

2 — R — 10

RPLC2

2 — R — 10

RPLC3

2 — R — 10

YI-1

G

PRIMARY PLC

RPLC3

YI-2

G

BACKUP PLC

BACK UP PLC

33B — 50mA — Q0.6 SPARE

ØA ØB ØC

PM1

1 3 5

SLA-440-ALE PHASE MONITOR

7 8 9 10 11 12

N/C

YI-2 BUILDING EXTERIOR ALARM LIGHT

R

45 — 50mA — Q0.2 HIGH LEVEL ALARM

BACK UP PLC

18B — 50mA — I0.0 PHASE FAILURE UNDER VOLTAGE

RUV

11 — 9

L1A

24+

24-

L1N

MATCHLINE 3

LEGEND

- △ DEVICE OR FIELD TERMINAL LOCATED AT MOTOR
- ✱ DEVICE OR FIELD TERMINAL LOCATED REMOTE
- □ DEVICE OR FIELD TERMINAL LOCATED AT MCC/POWER PANEL
- ■ FIELD TERMINAL LOCATED AT CONTROL PANEL
- ▲ REMOTE TERMINAL
- ● DEVICE TERMINAL NO.
- ◆ PLC INTERFACE TERMINAL

NO.	DATE	REVISIONS	APP.

KGI Kalluri Group, Inc.

TBPE Registration No. F-665
16300 Katy Freeway, Suite 172
Houston, Texas 77094
Phone: (713)-365-9288
PROJECT 4285

QUIDDITY
Texas Board of Professional Engineers and Land Surveyors Reg. No. F-23290
6330 West Loop South, Suite 150 • Bellaire, TX 77401 • 713.777.5337

JOB NO: 00050-0099-01 DATE: 5/7/2026

APPROVED BY: RK

DATE: 05/2026

DESIGNED BY: SLJ

DRAWN BY: RHW

SURVEYED BY: WESTERN GROUP CONSULTANTS
FB NO. P-6414

STATE OF TEXAS — STACY L. JORDAN — 148233 — LICENSED PROFESSIONAL ENGINEER — 05.12.2026

CITY OF HOUSTON
HOUSTON PUBLIC WORKS

SCOTT STREET NO. 1 LIFT STATION REHABILITATION

INSTRUMENTATION

DRY WEATHER CONTROL PANEL CONTROL WIRING DIAGRAM - III

WBS NUMBER	FOR CITY OF HOUSTON USE ONLY
R-000267-127A-4	
DRAWING SCALE	
AS NOTED	
CITY OF HOUSTON PM	
TAHA LOTIA	
DWG NO. 1-I-09	
SHEET NO. 194 OF 220	

F:\Users\KGI-StacyJordan\Kalluri Group, Inc\KGI - Documents\4285-QEL (Scott Street LS)\Drawings\Instrumentation\1-I-09 Dry Weather Control Panel Control Wiring Diagram - III.dwg

ORIGINAL SCALE IN INCHES FOR REDUCED PLANS

FIELD | MOTOR CONTROL CENTER | DOOR | INTERIOR PANEL | PLC

DRY WEATHER LIFT STATION CONTROL PANEL

NO.	DATE	REVISIONS	APP.

PUMP JUNCTION BOX

PUMP NO.1

4-20mA CURRENT TRANSDUCER

SSRV NO. 1

MCP

MCC

HS-1 H-O-A

MULTILIN 869 NO.1

TRIP

START INHIBIT

AUX 4 (TRIP)

CPT - 480-120VAC 1PH, 250VA MIN

TDLP1

SSRV NO.1

FAULT

RUNNING

UP TO SPEED

NOT FAULT

CRM1

CRM1A

BACKUP FLOAT CONTROL PANEL

TDLP1F

FROM 1-I-07

TO SHEET 1-I-11

YI-1

5A TB4-6

24 VDC POWER

TBP1

3N1

3P2

3P1

RM1

RMTH1

RMSL1

RPLC1

RBRM1

RPLMP1

RPLRST1

RRST1

125	50mA	AI0.8 PUMP NO.1 MOTOR CURRENT
100	1A	Q0.7 PUMP NO.1 CALL TO RUN
114	50mA	I3.1 PUMP NO.1 IN HAND
115	50mA	I3.0 PUMP NO.1 IN AUTO
117	50mA	I3.3 PUMP NO.1 MOTOR OVERLOAD ALARM
128	50mA	I1.1 PUMP NO.1 HIGH TEMPERATURE ALARM
129	50mA	I3.2 PUMP NO.1 SEAL FAILURE ALARM
113	50mA	I1.0 PUMP NO.1 ON/OFF

LSH-1 SEAL LEAK SENSOR *1

TSH-1 MOTOR TEMP SWITCH *2

LSH-1A SEAL LEAK SENSOR *3

TSH-1A MOTOR TEMP SENSOR *4

LAH-1 SL1

TAH-1 MTH1

'A'

PPM 1

LAH-1A SL1A

TAH-1A MTH1A

'D'

PPM 1A

*1 RESISTIVE MOISTURE SENSOR
*2 BIMETAL SWITCH OR PTC THERMISTOR
*3 PTC THERMISTOR, BIMETAL SWITCH, OR LEAKAGE FLOAT
*4 PT100 RTD

LEGEND

- △ DEVICE OR FIELD TERMINAL LOCATED AT MOTOR
- ▪ DEVICE OR FIELD TERMINAL LOCATED REMOTE
- □ DEVICE OR FIELD TERMINAL LOCATED AT MCC/POWER PANEL
- ■ FIELD TERMINAL LOCATED AT CONTROL PANEL
- ▲ REMOTE TERMINAL
- ● DEVICE TERMINAL NO.
- ◆ PLC INTERFACE TERMINAL

KEYED NOTES:

1. FAULT AND TRIP RELAY OUTPUT CONTACT STATUSES SHOWN WITH THE DEVICE ENERGIZED AND IN THE NON-FAULT OR NON-TRIP STATE.
2. PUMP PROTECTION MODULE(S) (PPM) AND ASSOCIATED SCHEMATIC WIRING ARE BASED ON PUMPSAFE BRAND MODULES, TYPE 'A', 'B', OR 'D', AS INDICATED. OUTPUT CONTACT STATUS IS SHOWN IN THE ENERGIZED, NON-ALARM CONDITION. THE SCHEMATIC ILLUSTRATES THE REQUIRED PUMP MOISTURE AND TEMPERATURE MONITORING AND PROTECTION. THE CONTRACTOR SHALL COORDINATE WITH THE PUMP MANUFACTURER REGARDING THE SUPPLIED PPM(S) AND THE SENSORS INTEGRATED IN THE PUMPS, AND SHALL MODIFY THE CIRCUIT AS NECESSARY.
3. FUSED TERMINAL ON TERMINAL BLOCK TB4 POWERED BY PERMISSIVE CONTACT FROM RELAY 'RUV' TO OPERATE THE PPM(S) AND THE PUMP PLC LOGIC. SEE CONTROL POWER & COMMUNICATIONS WIRING DIAGRAM ON SHEET 1-I-17 FOR DETAILS.
4. ALL FLOAT CONTROL CIRCUIT CONDUCTORS SHALL HAVE YELLOW INSULATION.

KGI Kalluri Group, Inc.
TBPE Registration No. F-665
16300 Katy Freeway, Suite 172
Houston, Texas 77094
Phone: (713)-365-9288
PROJECT 4285

QUIDDITY
Texas Board of Professional Engineers and Land Surveyors Reg. No. F-23290
6330 West Loop South, Suite 150 • Bellaire, TX 77401 • 713.777.5337

JOB NO: 00050-0099-01 DATE: 5/7/2026

APPROVED BY: RK

DATE: 05/2026

DESIGNED BY: SLJ

DRAWN BY: RHW

SURVEYED BY: WESTERN GROUP CONSULTANTS
FB NO. P-6414

STATE OF TEXAS · STACY L. JORDAN · 148233 · LICENSED PROFESSIONAL ENGINEER · 05.12.2026

CITY OF HOUSTON
HOUSTON PUBLIC WORKS

SCOTT STREET NO. 1 LIFT STATION REHABILITATION
INSTRUMENTATION
DRY WEATHER
PUMP 1 CONTROL
WIRING DIAGRAM

WBS NUMBER	FOR CITY OF HOUSTON USE ONLY
R-000267-127A-4	
DRAWING SCALE	
AS NOTED	
CITY OF HOUSTON PM	
TAHA LOTIA	
DWG NO. 1-I-10	
SHEET NO. 195 OF 220	

F:\Users\KGI-StacyJordan\Kalluri Group, Inc\KGI - Documents\4285-QEL (Scott Street LS)\Drawings\Instrumentation\1-I-10 Dry Weather Pump 1 Control Wiring Diagram.dwg

ORIGINAL SCALE IN INCHES FOR REDUCED PLANS

FIELD | MOTOR CONTROL CENTER | DOOR | INTERIOR PANEL | PLC

DRY WEATHER LIFT STATION CONTROL PANEL

NO.	DATE	REVISIONS	APP.

PUMP JUNCTION BOX

PUMP NO.2

4-20mA CURRENT TRANSDUCER

SSRV NO. 2

MCP

MCC

HGF CT

GF CT

CT

MULTILIN 869 NO.2

TRIP

START INHIBIT

AUX 4 (TRIP)

CPT - 480-120VAC 1PH, 250VA MIN

TDLP2

SSRV NO.2

FAULT

RUNNING

UP TO SPEED

NOT FAULT

CRM2

CRM2A

BACKUP FLOAT CONTROL PANEL

TDLP2F

FROM 1-I-10

TO SHEET 1-I-12

HS-2 H-O-A

RMTH2

RMSL2

RPLC1

RBRM2

RPLMP2

RPLRST1

RRST2

YI-2

LSH-2 SEAL LEAK SENSOR *1

TSH-2 MOTOR TEMP SWITCH *2

LSH-2A SEAL LEAK SENSOR *3

TSH-2A MOTOR TEMP SENSOR *4

LAH-2 SL2

LAH-2A SL2A

TAH-2 MTH2

TAH-2A MTH2A

PPM 2

PPM 2A

24 VDC POWER

225	50mA	AI1.0 PUMP NO.2 MOTOR CURRENT
200	1A	Q1.0 PUMP NO.2 CALL TO RUN
214	50mA	I3.5 PUMP NO.2 IN HAND
215	50mA	I3.4 PUMP NO.2 IN AUTO
217	50mA	I3.7 PUMP NO.2 MOTOR OVERLOAD ALARM
228	50mA	I1.3 PUMP NO.2 HIGH TEMPERATURE ALARM
229	50mA	I3.6 PUMP NO.2 SEAL FAILURE ALARM
213	50mA	I1.2 PUMP NO.2 ON/OFF

LEGEND

- △ DEVICE OR FIELD TERMINAL LOCATED AT MOTOR
- ▪ DEVICE OR FIELD TERMINAL LOCATED REMOTE
- □ DEVICE OR FIELD TERMINAL LOCATED AT MCC/POWER PANEL
- ■ FIELD TERMINAL LOCATED AT CONTROL PANEL
- ▲ REMOTE TERMINAL
- ● DEVICE TERMINAL NO.
- ◆ PLC INTERFACE TERMINAL

KEYED NOTES:

1. FAULT AND TRIP RELAY OUTPUT CONTACT STATUSES SHOWN WITH THE DEVICE ENERGIZED AND IN THE NON-FAULT OR NON-TRIP STATE.
2. PUMP PROTECTION MODULE(S) (PPM) AND ASSOCIATED SCHEMATIC WIRING ARE BASED ON PUMPSAFE BRAND MODULES, TYPE 'A', 'B', OR 'D', AS INDICATED. OUTPUT CONTACT STATUS IS SHOWN IN THE ENERGIZED, NON-ALARM CONDITION. THE SCHEMATIC ILLUSTRATES THE REQUIRED PUMP MOISTURE AND TEMPERATURE MONITORING AND PROTECTION. THE CONTRACTOR SHALL COORDINATE WITH THE PUMP MANUFACTURER REGARDING THE SUPPLIED PPM(S) AND THE SENSORS INTEGRATED IN THE PUMPS, AND SHALL MODIFY THE CIRCUIT AS NECESSARY.
3. FUSED TERMINAL ON TERMINAL BLOCK TB4 POWERED BY PERMISSIVE CONTACT FROM RELAY 'RUV' TO OPERATE THE PPM(S) AND THE PUMP PLC LOGIC. SEE CONTROL POWER & COMMUNICATIONS WIRING DIAGRAM ON SHEET 1-I-17 FOR DETAILS.
4. ALL FLOAT CONTROL CIRCUIT CONDUCTORS SHALL HAVE YELLOW INSULATION.

*1 RESISTIVE MOISTURE SENSOR
*2 BIMETAL SWITCH OR PTC THERMISTOR
*3 PTC THERMISTOR, BIMETAL SWITCH, OR LEAKAGE FLOAT
*4 PT100 RTD

KGI Kalluri Group, Inc.
TBPE Registration No. F-665
16300 Katy Freeway, Suite 172
Houston, Texas 77094
Phone: (713)-365-9288
PROJECT 4285

QUIDDITY
Texas Board of Professional Engineers and Land Surveyors Reg. No. F-23290
6330 West Loop South, Suite 150 • Bellaire, TX 77401 • 713.777.5337

JOB NO: 00050-0099-01 DATE: 5/7/2026

APPROVED BY: RK

DATE: 05/2026

DESIGNED BY: SLJ

DRAWN BY: RHW

SURVEYED BY: WESTERN GROUP CONSULTANTS

FB NO. P-6414

STATE OF TEXAS — STACY L. JORDAN — 148233 — LICENSED PROFESSIONAL ENGINEER — 05.12.2026

CITY OF HOUSTON
HOUSTON PUBLIC WORKS

SCOTT STREET NO. 1 LIFT STATION REHABILITATION
INSTRUMENTATION
DRY WEATHER
PUMP 2 CONTROL
WIRING DIAGRAM

WBS NUMBER	FOR CITY OF HOUSTON USE ONLY
R-000267-127A-4	
DRAWING SCALE	
AS NOTED	
CITY OF HOUSTON PM	
TAHA LOTIA	
DWG NO. 1-I-11	
SHEET NO. 196 OF 220	

F:\Users\KGI-StacyJordan\Kalluri Group, Inc\KGI - Documents\4285-QEL (Scott Street LS)\Drawings\Instrumentation\1-I-11 Dry Weather Pump 2 Control Wiring Diagram.dwg

ORIGINAL SCALE IN INCHES FOR REDUCED PLANS

FIELD | MOTOR CONTROL CENTER | DOOR | INTERIOR PANEL | PLC

DRY WEATHER LIFT STATION CONTROL PANEL

NO.	DATE	REVISIONS	APP.

PUMP JUNCTION BOX

PUMP NO.3

4-20mA CURRENT TRANSDUCER

SSRV NO. 3

MCP

MCC

MULTILIN 869 NO.3

CPT - 480-120VAC 1PH, 250VA MIN

TDLP3

SSRV NO.3

CRM3

CRM3A

BACKUP FLOAT CONTROL PANEL

TDLP3F

FROM 1-I-11

TO SHEET 1-I-13

HS-3 H-O-A

YI-3

RM3

RMTH3

RPLRST1

RRST3

RMSL3

RPLC1

RBRM3

RPLMP3

RMTH3

RRST3

RMSL3

LAH-3 SL3

TAH-3 MTH3

LAH-3A SL3A

TAH-3A MTH3A

PPM 3

PPM 3A

LSH-3 SEAL LEAK SENSOR *1

TSH-3 MOTOR TEMP SWITCH *2

LSH-3A SEAL LEAK SENSOR *3

TSH-3A MOTOR TEMP SENSOR *4

24 VDC POWER

325	50mA	AI1.2	PUMP NO.3 MOTOR CURRENT
300	1A	Q1.1	PUMP NO.3 CALL TO RUN
314	50mA	I4.1	PUMP NO.3 IN HAND
315	50mA	I4.0	PUMP NO.3 IN AUTO
317	50mA	I4.3	PUMP NO.3 MOTOR OVERLOAD ALARM
328	50mA	I1.5	PUMP NO.3 HIGH TEMPERATURE ALARM
329	50mA	I4.2	PUMP NO.3 SEAL FAILURE ALARM
313	50mA	I1.4	PUMP NO.3 ON/OFF

*1 RESISTIVE MOISTURE SENSOR
*2 BIMETAL SWITCH OR PTC THERMISTOR
*3 PTC THERMISTOR, BIMETAL SWITCH, OR LEAKAGE FLOAT
*4 PT100 RTD

LEGEND

- △ DEVICE OR FIELD TERMINAL LOCATED AT MOTOR
- ▪ DEVICE OR FIELD TERMINAL LOCATED REMOTE
- □ DEVICE OR FIELD TERMINAL LOCATED AT MCC/POWER PANEL
- ■ FIELD TERMINAL LOCATED AT CONTROL PANEL
- ▲ REMOTE TERMINAL
- ● DEVICE TERMINAL NO.
- ◆ PLC INTERFACE TERMINAL

KEYED NOTES:

1. FAULT AND TRIP RELAY OUTPUT CONTACT STATUSES SHOWN WITH THE DEVICE ENERGIZED AND IN THE NON-FAULT OR NON-TRIP STATE.
2. PUMP PROTECTION MODULE(S) (PPM) AND ASSOCIATED SCHEMATIC WIRING ARE BASED ON PUMPSAFE BRAND MODULES, TYPE 'A', 'B', OR 'D', AS INDICATED. OUTPUT CONTACT STATUS IS SHOWN IN THE ENERGIZED, NON-ALARM CONDITION. THE SCHEMATIC ILLUSTRATES THE REQUIRED PUMP MOISTURE AND TEMPERATURE MONITORING AND PROTECTION. THE CONTRACTOR SHALL COORDINATE WITH THE PUMP MANUFACTURER REGARDING THE SUPPLIED PPM(S) AND THE SENSORS INTEGRATED IN THE PUMPS, AND SHALL MODIFY THE CIRCUIT AS NECESSARY.
3. FUSED TERMINAL ON TERMINAL BLOCK TB4 POWERED BY PERMISSIVE CONTACT FROM RELAY 'RUV' TO OPERATE THE PPM(S) AND THE PUMP PLC LOGIC. SEE CONTROL POWER & COMMUNICATIONS WIRING DIAGRAM ON SHEET 1-I-17 FOR DETAILS.
4. ALL FLOAT CONTROL CIRCUIT CONDUCTORS SHALL HAVE YELLOW INSULATION.

KGI Kalluri Group, Inc.
TBPE Registration No. F-665
16300 Katy Freeway, Suite 172
Houston, Texas 77094
Phone: (713)-365-9288
PROJECT 4285

QUIDDITY
Texas Board of Professional Engineers and Land Surveyors Reg. No. F-23290
6330 West Loop South, Suite 150 • Bellaire, TX 77401 • 713.777.5337

JOB NO: 00050-0099-01 DATE: 5/7/2026

APPROVED BY: RK

DATE: 05/2026

DESIGNED BY: SLJ

DRAWN BY: RHW

SURVEYED BY: WESTERN GROUP CONSULTANTS
FB NO. P-6414

STATE OF TEXAS — STACY L. JORDAN — 148233 — LICENSED PROFESSIONAL ENGINEER — 05.12.2026

CITY OF HOUSTON
HOUSTON PUBLIC WORKS

SCOTT STREET NO. 1 LIFT STATION REHABILITATION
INSTRUMENTATION
DRY WEATHER
PUMP 3 CONTROL
WIRING DIAGRAM

WBS NUMBER	FOR CITY OF HOUSTON USE ONLY
R-000267-127A-4	
DRAWING SCALE	
AS NOTED	
CITY OF HOUSTON PM	
TAHA LOTIA	
DWG NO. 1-I-12	
SHEET NO. 197 OF 220	

F:\Users\KGI-StacyJordan\Kalluri Group, Inc\KGI - Documents\4285-QEL (Scott Street LS)\Drawings\Instrumentation\1-I-12 Dry Weather Pump 3 Control Wiring Diagram.dwg

ORIGINAL SCALE IN INCHES FOR REDUCED PLANS

FIELD | MOTOR CONTROL CENTER | DOOR | INTERIOR PANEL | PLC

DRY WEATHER LIFT STATION CONTROL PANEL

NO.	DATE	REVISIONS	APP.

PUMP JUNCTION BOX

PUMP NO.4

4-20mA CURRENT TRANSDUCER

HGF CT | GF CT | CT

SSRV NO. 4

MCP | MCC

MULTILIN 869 NO.4

TRIP | START INHIBIT | AUX 4 (TRIP)

CPT - 480-120VAC 1PH, 250VA MIN

TDLP4 | TDLP4F

SSRV NO.4

FAULT | RUNNING | UP TO SPEED | NOT FAULT

CRM4 | CRM4A

BACKUP FLOAT CONTROL PANEL

FROM 1-I-12

HS-4 H-O-A

5A TB4-9 | 24 VDC POWER | TBP4 | 3N4 | 3P4

RMTH4 | RMSL4 | RPLC2 | RBRM4 | RPLMP4 | RM4 | RPLRST2 | RRST4

YI-4

LSH-4 SEAL LEAK SENSOR *1

TSH-4 MOTOR TEMP SWITCH *2

LSH-4A SEAL LEAK SENSOR *3

TSH-4A MOTOR TEMP SENSOR *4

LAH-4 SL4 | TAH-4 MTH4 | PPM 4

LAH-4A SL4A | TAH-4A MTH4A | PPM 4A

425	50mA	AI1.4 PUMP NO.4 MOTOR CURRENT
400	1A	Q2.0 PUMP NO.4 CALL TO RUN
414	50mA	I4.5 PUMP NO.4 IN HAND
415	50mA	I4.4 PUMP NO.4 IN AUTO
417	50mA	I4.7 PUMP NO.4 MOTOR OVERLOAD ALARM
428	50mA	I2.1 PUMP NO.4 HIGH TEMPERATURE ALARM
429	50mA	I4.6 PUMP NO.4 SEAL FAILURE ALARM
413	50mA	I2.0 PUMP NO.4 ON/OFF

*1 RESISTIVE MOISTURE SENSOR
*2 BIMETAL SWITCH OR PTC THERMISTOR
*3 PTC THERMISTOR, BIMETAL SWITCH, OR LEAKAGE FLOAT
*4 PT100 RTD

LEGEND

- △ DEVICE OR FIELD TERMINAL LOCATED AT MOTOR
- ▪ DEVICE OR FIELD TERMINAL LOCATED REMOTE
- □ DEVICE OR FIELD TERMINAL LOCATED AT MCC/POWER PANEL
- ■ FIELD TERMINAL LOCATED AT CONTROL PANEL
- ▲ REMOTE TERMINAL
- ● DEVICE TERMINAL NO.
- ◆ PLC INTERFACE TERMINAL

KEYED NOTES:

1. FAULT AND TRIP RELAY OUTPUT CONTACT STATUSES SHOWN WITH THE DEVICE ENERGIZED AND IN THE NON-FAULT OR NON-TRIP STATE.
2. PUMP PROTECTION MODULE(S) (PPM) AND ASSOCIATED SCHEMATIC WIRING ARE BASED ON PUMPSAFE BRAND MODULES, TYPE 'A', 'B', OR 'D', AS INDICATED. OUTPUT CONTACT STATUS IS SHOWN IN THE ENERGIZED, NON-ALARM CONDITION. THE SCHEMATIC ILLUSTRATES THE REQUIRED PUMP MOISTURE AND TEMPERATURE MONITORING AND PROTECTION. THE CONTRACTOR SHALL COORDINATE WITH THE PUMP MANUFACTURER REGARDING THE SUPPLIED PPM(S) AND THE SENSORS INTEGRATED IN THE PUMPS, AND SHALL MODIFY THE CIRCUIT AS NECESSARY.
3. FUSED TERMINAL ON TERMINAL BLOCK TB4 POWERED BY PERMISSIVE CONTACT FROM RELAY 'RUV' TO OPERATE THE PPM(S) AND THE PUMP PLC LOGIC. SEE CONTROL POWER & COMMUNICATIONS WIRING DIAGRAM ON SHEET 1-I-17 FOR DETAILS.
4. ALL FLOAT CONTROL CIRCUIT CONDUCTORS SHALL HAVE YELLOW INSULATION.

KGI Kalluri Group, Inc.
TBPE Registration No. F-665
16300 Katy Freeway, Suite 172
Houston, Texas 77094
Phone: (713)-365-9288
PROJECT 4285

QUIDDITY
Texas Board of Professional Engineers and Land Surveyors Reg. No. F-23290
6330 West Loop South, Suite 150 • Bellaire, TX 77401 • 713.777.5337

JOB NO: 00050-0099-01 DATE: 5/7/2026

APPROVED BY: RK
DATE: 05/2026
DESIGNED BY: SLJ
DRAWN BY: RHW
SURVEYED BY: WESTERN GROUP CONSULTANTS
FB NO. P-6414

STATE OF TEXAS — STACY L. JORDAN — 148233 — LICENSED PROFESSIONAL ENGINEER — 05.12.2026

CITY OF HOUSTON
HOUSTON PUBLIC WORKS

SCOTT STREET NO. 1 LIFT STATION REHABILITATION
INSTRUMENTATION
DRY WEATHER PUMP 4 CONTROL WIRING DIAGRAM

WBS NUMBER	FOR CITY OF HOUSTON USE ONLY
R-000267-127A-4	
DRAWING SCALE	
AS NOTED	
CITY OF HOUSTON PM	
TAHA LOTIA	
DWG NO. 1-I-13	
SHEET NO. 198 OF 220	

F:\Users\KGI-StacyJordan\Kalluri Group, Inc\KGI - Documents\4285-QEL (Scott Street LS)\Drawings\Instrumentation\1-I-13 Dry Weather Pump 4 Control Wiring Diagram.dwg

ORIGINAL SCALE IN INCHES FOR REDUCED PLANS

FIELD | MOTOR CONTROL CENTER | DOOR | DRY WEATHER BACKUP FLOAT CONTROL PANEL INTERIOR PANEL | DRY WEATHER LIFT STATION CONTROL PANEL INTERIOR PANEL | PLC

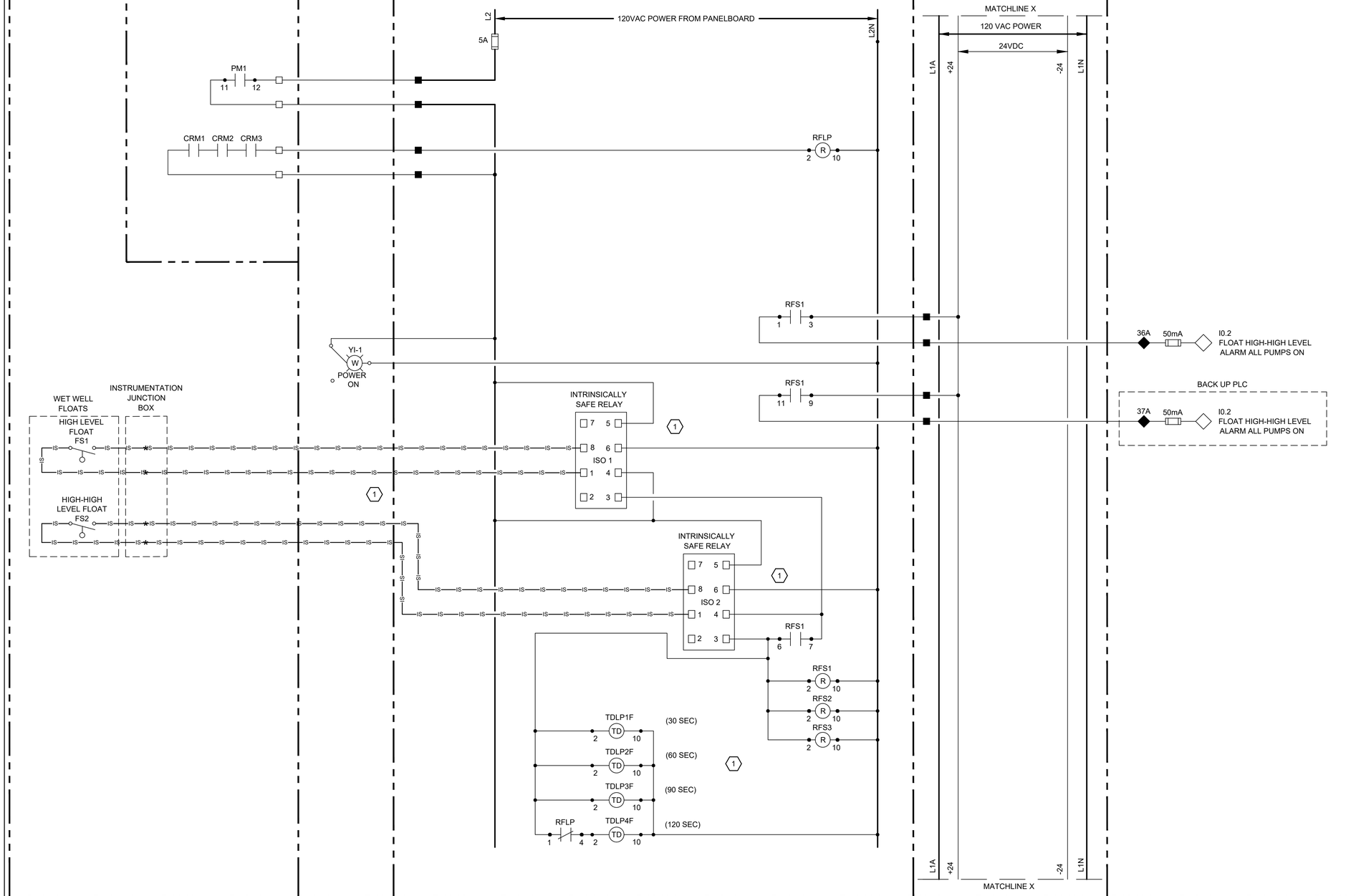

KEYED NOTES:

1. ALL FLOAT CONTROL CIRCUIT CONDUCTORS SHALL HAVE YELLOW INSULATION.

LEGEND

- △ DEVICE OR FIELD TERMINAL LOCATED AT MOTOR
- ✱ DEVICE OR FIELD TERMINAL LOCATED REMOTE
- □ DEVICE OR FIELD TERMINAL LOCATED AT MCC/POWER PANEL
- ■ FIELD TERMINAL LOCATED AT CONTROL PANEL
- ▲ REMOTE TERMINAL
- ● DEVICE TERMINAL NO.
- ◆ PLC INTERFACE TERMINAL

NO.	DATE	REVISIONS	APP.

KGI Kalluri Group, Inc.
TBPE Registration No. F-665
16300 Katy Freeway, Suite 172
Houston, Texas 77094
Phone: (713)-365-9288
PROJECT 4285

QUIDDITY
Texas Board of Professional Engineers and Land Surveyors Reg. No. F-23290
6330 West Loop South, Suite 150 • Bellaire, TX 77401 • 713.777.5337

JOB NO: 00050-0099-01 DATE: 5/7/2026

APPROVED BY: RK

DATE: 05/2026

DESIGNED BY: SLJ

DRAWN BY: RHW

SURVEYED BY: WESTERN GROUP CONSULTANTS
FB NO. P-6414

STATE OF TEXAS
STACY L. JORDAN
148233
LICENSED PROFESSIONAL ENGINEER
05.12.2026

CITY OF HOUSTON
HOUSTON PUBLIC WORKS

SCOTT STREET NO. 1 LIFT STATION REHABILITATION
INSTRUMENTATION
DRY WEATHER BACKUP FLOAT CONTROL PANEL WIRING DIAGRAM

WBS NUMBER
R-000267-127A-4

DRAWING SCALE
AS NOTED

CITY OF HOUSTON PM
TAHA LOTIA

DWG NO. 1-I-14

SHEET NO. 199 OF 220

FOR CITY OF HOUSTON USE ONLY

F:\Users\KGI-StacyJordan\Kalluri Group, Inc\KGI - Documents\4285-QEL (Scott Street LS)\Drawings\Instrumentation\1-I-14 Dry Weather Backup Float Control Panel Wiring Diagram.dwg

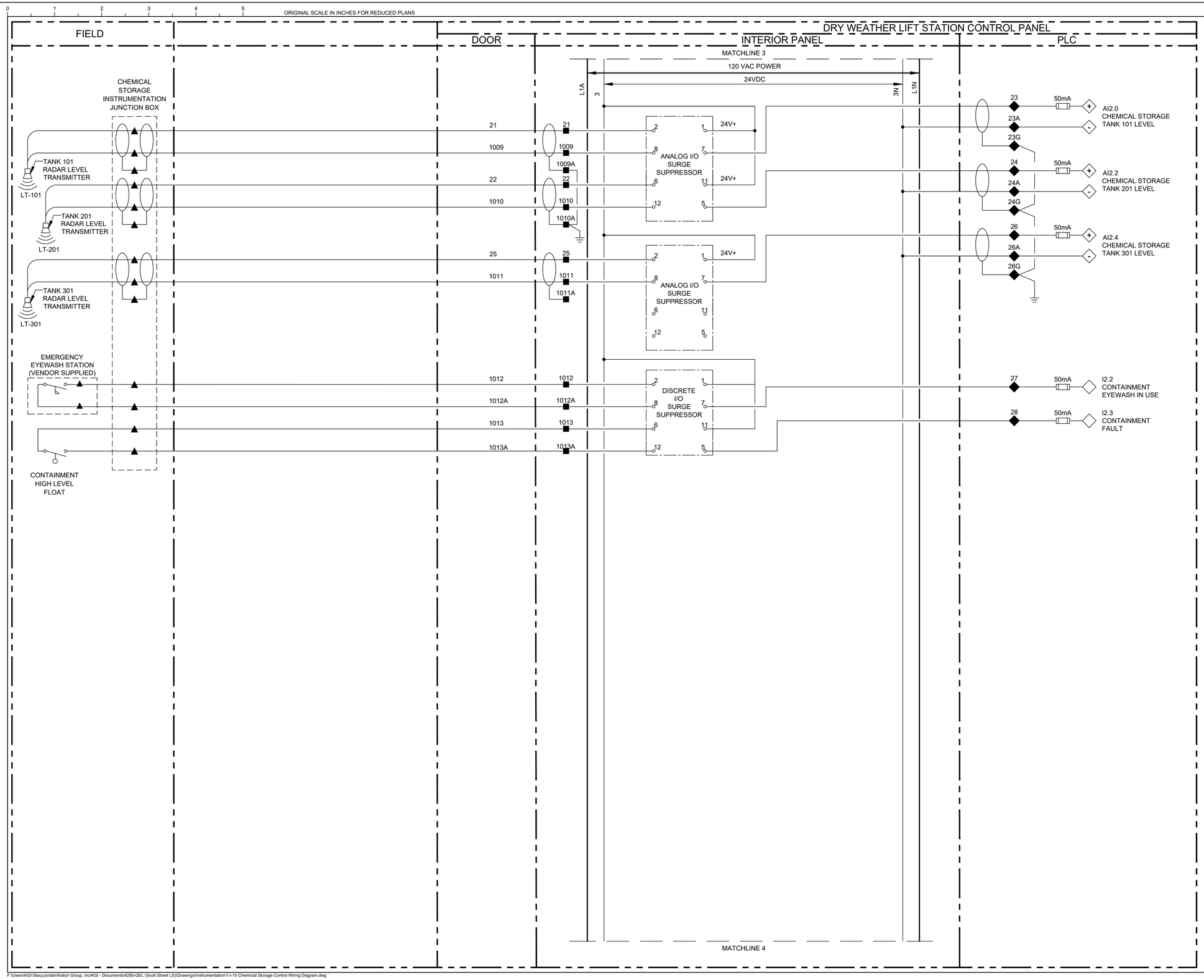

NO.	DATE	REVISIONS	APP.

LEGEND

- △ DEVICE OR FIELD TERMINAL LOCATED AT MOTOR
- • DEVICE OR FIELD TERMINAL LOCATED REMOTE
- □ DEVICE OR FIELD TERMINAL LOCATED AT MCC/POWER PANEL
- ■ FIELD TERMINAL LOCATED AT CONTROL PANEL
- ▲ REMOTE TERMINAL
- ● DEVICE TERMINAL NO.
- ◆ PLC INTERFACE TERMINAL

KGI Kalluri Group, Inc.
TBPE Registration No. F-665
16300 Katy Freeway, Suite 172
Houston, Texas 77094
Phone: (713)-365-9288
PROJECT 4285

QUIDDITY
Texas Board of Professional Engineers and Land Surveyors Reg. No. F-23290
6330 West Loop South, Suite 150 • Bellaire, TX 77401 • 713.777.5337

JOB NO: 00050-0099-01 DATE: 5/7/2026

APPROVED BY: RK
DATE: 05/2026
DESIGNED BY: SLJ
DRAWN BY: RHW
SURVEYED BY: WESTERN GROUP CONSULTANTS
FB NO. P-6414

STATE OF TEXAS
STACY L. JORDAN
148233
LICENSED
PROFESSIONAL ENGINEER
06.12.2026

CITY OF HOUSTON
HOUSTON PUBLIC WORKS

SCOTT STREET NO. 1
LIFT STATION REHABILITATION
INSTRUMENTATION

CHEMICAL STORAGE CONTROL WIRING DIAGRAM

WBS NUMBER	FOR CITY OF HOUSTON USE ONLY
R-000267-127A-4	
DRAWING SCALE	
AS NOTED	
CITY OF HOUSTON PM	
TAHA LOTIA	
DWG NO. 1-I-15	
SHEET NO. 200 OF 220	

F:\Users\KGI-StacyJordan\Kalluri Group, Inc\KGI - Documents\4285-QEL (Scott Street LS)\Drawings\Instrumentation\1-I-15 Chemicial Storage Control Wiring Diagram.dwg

ORIGINAL SCALE IN INCHES FOR REDUCED PLANS

FIELD | DOOR | DRY WEATHER LIFT STATION CONTROL PANEL: INTERIOR PANEL | PLC

MATCHLINE 4

120 VAC POWER

24VDC

L1A 3 | 3N | L1N

EMERGENCY EYEWASH STATION (VENDOR SUPPLIED)

CHEMICAL STORAGE INSTRUMENTATION JUNCTION BOX

2001 — 2001 — DISCRETE I/O SURGE SUPPRESSOR (2, 1, 8, 7, 6, 11, 12, 5) — 2002 — 50mA — I2.4 CHEMICAL METERING EYEWASH IN USE

2001A — 2001A

CHEMICAL METERING PUMP 101 (VENDOR SUPPLIED)

2003 — 2003 — ANALOG I/O SURGE SUPPRESSOR (2, 1, 8, 7, 6, 11, 12, 5) — 24V+ — 2007 — 50mA — (+) AI2.6 CHEMICAL METERING PUMP 101 SPEED FEEDBACK

2004 — 2004 — 2004A — 2007A — (-)

2007G

2005 — 2005 — 2008 — 50mA — (+) AQ0.0 CHEMICAL METERING PUMP 101 SPEED SETPOINT

2006 — 2006 — 2006A — 2008A — (-)

2008G

2009 — 2009 — DISCRETE I/O SURGE SUPPRESSOR (2, 1, 8, 7, 6, 11, 12, 5) — 24V+ — 2010A — 50mA — I2.5 CHEMICAL METERING PUMP 101 IN REMOTE

2010 — 2010

2011 — 2011 — 24V+

2012 — 2012 — 2012A — 50mA — I2.6 CHEMICAL METERING PUMP 201 IN REMOTE

2014 — 2014

2015 — 2015 — RMP1 (1, 3) — RMP1 (2, R, 10) — 2013 — 1A — Q2.1 CHEMICAL METERING PUMP 101 START/STOP COMMAND

CHEMICAL METERING PUMP 201 (VENDOR SUPPLIED)

2016 — 2016 — ANALOG I/O SURGE SUPPRESSOR (2, 1, 8, 7, 6, 11, 12, 5) — 24V+ — 2020 — 50mA — (+) AI2.8 CHEMICAL METERING PUMP 201 SPEED FEEDBACK

2017 — 2017 — 2017A — 2020A — (-)

2020G

2018 — 2018 — 2021 — 50mA — (+) AQ0.2 CHEMICAL METERING PUMP 201 SPEED SETPOINT

2019 — 2019 — 2019A — 2021A — (-)

2021G

2023 — 2023 — 2022 — 1A — Q2.2 CHEMICAL METERING PUMP 201 START/STOP COMMAND

2024 — 2024 — RMP2 (1, 3) — RMP2 (2, R, 10)

NO.	DATE	REVISIONS	APP.

LEGEND

- △ DEVICE OR FIELD TERMINAL LOCATED AT MOTOR
- • DEVICE OR FIELD TERMINAL LOCATED REMOTE
- □ DEVICE OR FIELD TERMINAL LOCATED AT MCC/POWER PANEL
- ■ FIELD TERMINAL LOCATED AT CONTROL PANEL
- ▲ REMOTE TERMINAL
- ● DEVICE TERMINAL NO.
- ◆ PLC INTERFACE TERMINAL

KGI Kalluri Group, Inc.

TBPE Registration No. F-665
16300 Katy Freeway, Suite 172
Houston, Texas 77094
Phone: (713)-365-9288

PROJECT 4285

QUIDDITY
Texas Board of Professional Engineers and Land Surveyors Reg. No. F-23290
6330 West Loop South, Suite 150 • Bellaire, TX 77401 • 713.777.5337

JOB NO: 00050-0099-01 DATE: 5/7/2026

APPROVED BY: RK

DATE: 05/2026

DESIGNED BY: SLJ

DRAWN BY: RHW

SURVEYED BY: WESTERN GROUP CONSULTANTS
FB NO. P-6414

STATE OF TEXAS — STACY L. JORDAN — 148233 — LICENSED PROFESSIONAL ENGINEER — 04.17.2026

CITY OF HOUSTON
HOUSTON PUBLIC WORKS

SCOTT STREET NO. 1 LIFT STATION REHABILITATION
INSTRUMENTATION

CHEMICAL METERING CONTROL WIRING DIAGRAM

WBS NUMBER
R-000267-127A-4
DRAWING SCALE
AS NOTED
CITY OF HOUSTON PM
TAHA LOTIA
DWG NO. 1-I-16
SHEET NO. 201 OF 220

FOR CITY OF HOUSTON USE ONLY

F:\Users\KGI-StacyJordan\Kalluri Group, Inc\KGI - Documents\4285-QEL (Scott Street LS)\Drawings\Instrumentation\1-I-16 Chemicial Metering Control Wiring Diagram.dwg

ORIGINAL SCALE IN INCHES FOR REDUCED PLANS

NO.	DATE	REVISIONS	APP.

NOTES:

1. REFER TO SPECIFICATION SECTION 16120 LOW-VOLTAGE WIRES AND CABLES FOR CONDUCTOR COLOR CODE.
2. THE PLC POWER SUPPLY SHALL FEED THE 24VDC I/O.
3. COMMUNICATION PPU-AC & SCADA SHALL BE PROVIDED BY CONTRACTOR INCLUDING TO RUN CONDUITS & WIRES.
4. ETHERNET CABLE FOR MERAKI CELLULAR ROUTER (P1).
5. POE CABLE TO RADIO.
6. THE DRY WEATHER PLC SHALL HAVE (4) 869 MOTOR PROTECTION RELAYS, CONNECTED VIA PROFINET COMMUNICATION. CONNECT TO EACH RELAY IN A DAISY CHAIN CONFIGURATION.

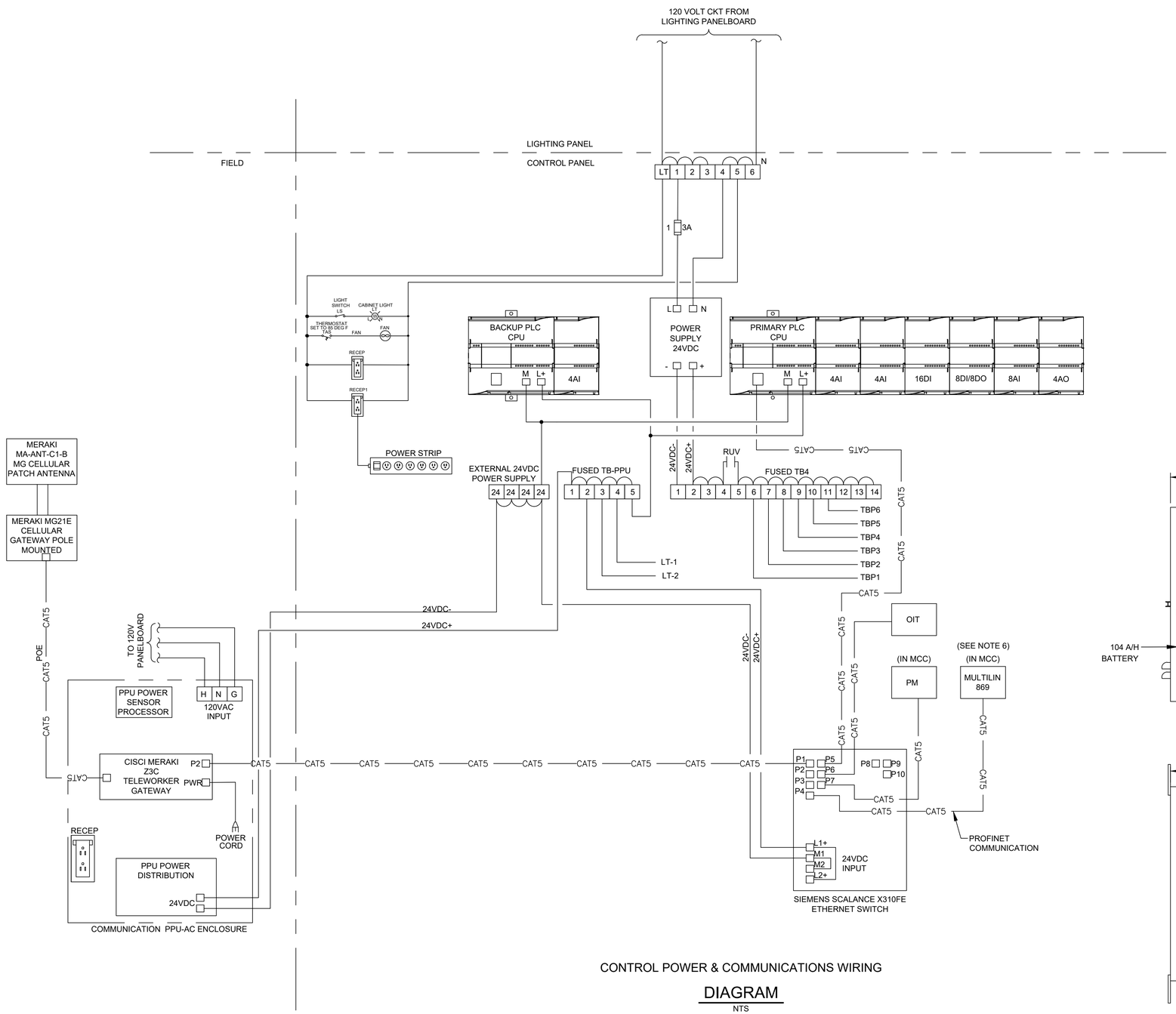

CONTROL POWER & COMMUNICATIONS WIRING

DIAGRAM

NTS

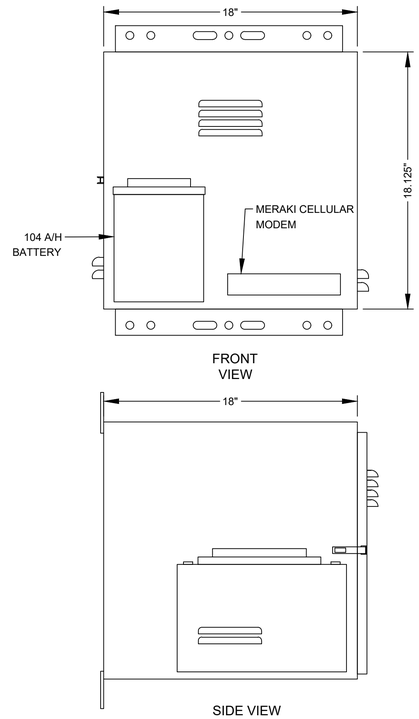

PPU-AC CONTROL ENCLOSURE

ELEVATION

NTS

KGI Kalluri Group, Inc.

TBPE Registration No. F-665
16300 Katy Freeway, Suite 172
Houston, Texas 77094
Phone: (713)-365-9288
PROJECT 4285

QUIDDITY

Texas Board of Professional Engineers and Land Surveyors Reg. No. F-23290
6330 West Loop South, Suite 150 • Bellaire, TX 77401 • 713.777.5337

JOB NO: 00050-0099-01 DATE: 5/7/2026

APPROVED BY: RK	
DATE: 05/2026	
DESIGNED BY: SLJ	
DRAWN BY: RHW	
SURVEYED BY: WESTERN GROUP CONSULTANTS FB NO. P-6414	

STATE OF TEXAS
STACY L. JORDAN
148233
LICENSED PROFESSIONAL ENGINEER
04.12.2026

CITY OF HOUSTON
HOUSTON PUBLIC WORKS

SCOTT STREET NO. 1 LIFT STATION REHABILITATION

INSTRUMENTATION

DRY WEATHER PLC COMMUNICATION DIAGRAM

WBS NUMBER	FOR CITY OF HOUSTON USE ONLY
R-000267-127A-4	
DRAWING SCALE	
AS NOTED	
CITY OF HOUSTON PM	
TAHA LOTIA	
DWG NO. 1-I-17	
SHEET NO. 202 OF 220	

F:\Users\KGI-Stacy.Jordan\Kalluri Group, Inc\KGI - Documents\4285-QEL (Scott Street LS)\Drawings\Instrumentation\1-1-17 Dry Weather PLC Communication Diagram.dwg

ORIGINAL SCALE IN INCHES FOR REDUCED PLANS

NO.	DATE	REVISIONS	APP.

HMI

PANEL PLC

INFLUENT PUMP NO.1 SP-02A-101

INFLUENT PUMP NO.3 SP-02A-201

INFLUENT PUMP NO.5 SP-02A-301

INFLUENT PUMP NO.7 SP-02A-401

IN HAND HI 2A101 | IN AUTO IA 2A101 | ON/OFF YFS 2A101

SEAL FAIL ALARM MA 2A101 | MOTOR OVERLOAD ALARM MO 2A101 | MOTOR CURRENT II 2A101 | HIGH TEMP ALARM TH 2A101 | START/STOP YCS 2A101

IN HAND HI 2A201 | IN AUTO IA 2A201 | ON/OFF YFS 2A201

SEAL FAIL ALARM MA 2A201 | MOTOR OVERLOAD ALARM MO 2A201 | MOTOR CURRENT II 2A201 | HIGH TEMP ALARM TH 2A201 | START/STOP YCS 2A201

IN HAND HI 2A301 | IN AUTO IA 2A301 | ON/OFF YFS 2A301

SEAL FAIL ALARM MA 2A301 | MOTOR OVERLOAD ALARM MO 2A301 | MOTOR CURRENT II 2A301 | HIGH TEMP ALARM TH 2A301 | START/STOP YCS 2A301

IN HAND HI 2A401 | IN AUTO IA 2A401 | ON/OFF YFS 2A401

SEAL FAIL ALARM MA 2A401 | MOTOR OVERLOAD ALARM MO 2A401 | MOTOR CURRENT II 2A401 | HIGH TEMP ALARM TH 2A401 | START/STOP YCS 2A401

FLOAT HIGH WEST DRYWELL LEVEL LAH 1C

FLOAT HIGH EAST DRYWELL LEVEL LAH 1C

PRIMARY LEVEL TRANSMITTER: HIGH LEVEL LAH 1 | LEVEL INDICATION LI 1 | LOW LEVEL LAL 1

BACKUP LEVEL TRANSMITTER: HIGH LEVEL LAH 2 | LEVEL INDICATION LI 2 | LOW LEVEL LAL 2

HIGH LEVEL ALARM LAH 1B

PRIMARY PLC MODE ACTIVE YI 1A

INTRUSION ALARM YA 1

BACKUP PLC

BACKUP PLC MODE ACTIVE YI 1B

PRIMARY LEVEL TRANSMITTER: HIGH LEVEL LAH 1A | LEVEL INDICATION LI 1A | LOW LEVEL LAL 1A

BACKUP LEVEL TRANSMITTER: HIGH LEVEL LAH 2A | LEVEL INDICATION LI 2A | LOW LEVEL LAL 2A

FLOAT HIGH-HIGH WETWELL LEVEL LAHH 2A

FLOAT HIGH-HIGH WETWELL LEVEL LAHH 1A

480V → RVSS NO.1 THRU 8

PUMP NO. 1 H/O/A | RUN R

PUMP NO. 3 H/O/A | RUN R

OIT

PUMP NO. 5 H/O/A | RUN R

PUMP NO. 7 H/O/A | RUN R

PRIMARY PLC G

BACKUP PLC G

WET WEATHER CONTROL PANEL

BACKUP FLOAT CONTROL PANEL

RS 1-I-01 FROM DRY WEATHER PUMP STATION — 48"

FA 1-I-04 TO ODOR CONTROL — 24"

WET WELL

LT 1 | LE 1

LT 2 | LE 2

HIGH-HIGH LEVEL FLOAT SWITCH

HIGH LEVEL FLOAT SWITCH

WEST DRY WELL

HIGH LEVEL FLOAT SWITCH

PI 07 — 3" ARV-02A-401 — 3/4" BV-02A-402 — 3" BV-02A-401 — LSH 2A104 — TSH 2A104

16" PV-02A-402 — 16" SCV-02A-401 — 16" — 14" SP-02A-401 — 14" — 18" — 18" PV-02A-401

PI 05 — 3" ARV-02A-301 — 3/4" BV-02A-302 — 3" BV-02A-301 — LSH 2A301 — TSH 2A301

16" PV-02A-302 — 16" SCV-02A-301 — 16" — 14" SP-02A-301 — 14" — 18" — 18" PV-02A-301

PI 03 — 3" ARV-02A-201 — 3/4" BV-02A-202 — 3" BV-02A-201 — LSH 2A201 — TSH 2A201

16" PV-02A-202 — 16" SCV-02A-201 — 16" — 14" SP-02A-201 — 14" — 18" — 18" PV-02A-201

PI 01 — 3" ARV-02A-101 — 3/4" BV-02A-102 — 3" BV-02A-101 — LSH 2A101 — TSH 2A101

16" PV-02A-102 — 16" SCV-02A-101 — 16" — 14" SP-02A-101 — 14" — 18" — 18" PV-02A-101

30" — 30"

EAST DRY WELL

HIGH LEVEL FLOAT SWITCH

PI 08 — 3" ARV-02B-401 — 3/4" BV-02B-402 — 3" BV-02B-401 — LSH 2B401 — TSH 2B401

18" PV-02B-401 — 18" — 14" SP-02B-401 — 14" — 16" — 16" SCV-02B-401 — 16" PV-02B-402

PI 06 — 3" ARV-02B-301 — 3/4" BV-02B-302 — 3" BV-02B-301 — LSH 2B301 — TSH 2B301

18" PV-02B-301 — 18" — 14" SP-02B-301 — 14" — 16" — 16" SCV-02B-301 — 16" PV-02B-302

PI 04 — 3" ARV-02B-201 — 3/4" BV-02B-202 — 3" BV-02B-201 — LSH 2B201 — TSH 2B201

18" PV-02B-201 — 18" — 14" SP-02B-201 — 14" — 16" — 16" SCV-02B-201 — 16" PV-02B-202

PI 02 — 3" ARV-02B-101 — 3/4" BV-02B-102 — 3" BV-02B-101 — LSH 2B101 — TSH 2B101

18" PV-02B-101 — 18" — 14" SP-02B-101 — 14" — 16" — 16" SCV-02B-101 — 16" PV-02B-102

30" — 36"

30" — 36"

PUMP 2 SENSORS 2-I-02 TO WET WEATHER CONTROL PANEL

PUMP 4 SENSORS 2-I-02 TO WET WEATHER CONTROL PANEL

PUMP 6 SENSORS 2-I-02 TO WET WEATHER CONTROL PANEL

PUMP 8 SENSORS 2-I-02 TO WET WEATHER CONTROL PANEL

RS 2-I-02 TO FLOW METER STATION

KGI Kalluri Group, Inc.
TBPE Registration No. F-665
16300 Katy Freeway, Suite 172
Houston, Texas 77094
Phone: (713)-365-9288
PROJECT 4285

QUIDDITY
Texas Board of Professional Engineers and Land Surveyors Reg. No. F-23290
6330 West Loop South, Suite 150 • Bellaire, TX 77401 • 713.777.5337

JOB NO: 00050-0099-01 DATE: 5/7/2026

APPROVED BY: RK

DATE: 05/2026

DESIGNED BY: SLJ

DRAWN BY: RHW

SURVEYED BY: WESTERN GROUP CONSULTANTS

FB NO. P-6414

STATE OF TEXAS — STACY L. JORDAN — 148233 — LICENSED PROFESSIONAL ENGINEER — 05.12.2026

CITY OF HOUSTON
HOUSTON PUBLIC WORKS

SCOTT STREET NO. 1 LIFT STATION REHABILITATION
INSTRUMENTATION

WET WEATHER STATION P&ID SHEET 1

WBS NUMBER	FOR CITY OF HOUSTON USE ONLY
R-000267-127A-4	
DRAWING SCALE	
AS NOTED	
CITY OF HOUSTON PM	
TAHA LOTIA	
DWG NO. 2-I-01	
SHEET NO. 203 OF 220	

F:\Users\KGI-StacyJordan\Kalluri Group, Inc\KGI - Documents\4285-QEL (Scott Street LS)\Drawings\Instrumentation\2-I-01 Wet Weather Pump Station P&ID Sheet 1.dwg

ORIGINAL SCALE IN INCHES FOR REDUCED PLANS

NO.	DATE	REVISIONS	APP.

HMI

PANEL PLC

INFLUENT PUMP NO.2 SP-02B-101

IN HAND HI 2B101 | IN AUTO IA 2B101 | ON/OFF YFS 2B101

SEAL FAIL ALARM MA 2B101 | MOTOR OVERLOAD ALARM MO 2B101 | MOTOR CURRENT II 2B101 | HIGH TEMP ALARM TH 2B101 | START/ STOP YCS 2B101

INFLUENT PUMP NO.4 SP-02B-201

IN HAND HI 2B201 | IN AUTO IA 2B201 | ON/OFF YFS 2B201

SEAL FAIL ALARM MA 2B201 | MOTOR OVERLOAD ALARM MO 2B201 | MOTOR CURRENT II 2B201 | HIGH TEMP ALARM TH 2B201 | START/ STOP YCS 2B201

INFLUENT PUMP NO.6 SP-02B-301

IN HAND HI 2B301 | IN AUTO IA 2B301 | ON/OFF YFS 2B301

SEAL FAIL ALARM MA 2B301 | MOTOR OVERLOAD ALARM MO 2B301 | MOTOR CURRENT II 2B301 | HIGH TEMP ALARM TH 2B301 | START/ STOP YCS 2B301

INFLUENT PUMP NO.8 SP-02B-401

IN HAND HI 2B401 | IN AUTO IA 2B401 | ON/OFF YFS 2B401

SEAL FAIL ALARM MA 2B401 | MOTOR OVERLOAD ALARM MO 2B401 | MOTOR CURRENT II 2B401 | HIGH TEMP ALARM TH 2B401 | START/ STOP YCS 2B401

ALARMS RESET YCS 1 | ALARMS RESET RE 1

BACKUP PLC

PUMP NO. 1 START/ STOP YCS 1A | PUMP NO. 3 START/ STOP YCS 3A | PUMP NO. 5 START/ STOP YCS 5A | PUMP NO. 7 START/ STOP YCS 7A

PUMP NO. 2 START/ STOP YCS 2A | PUMP NO. 4 START/ STOP YCS 4A | PUMP NO. 6 START/ STOP YCS 6A | PUMP NO. 8 START/ STOP YCS 8A | PHASE FAILURE UNDER VOLTAGE JA 2

PHASE FAILURE UNDER VOLTAGE JA 1 | ATS IN NORMAL SOURCE ZI 1A | ATS IN EMERG SOURCE ZI 1A

VALVE POSITION ZI 2B001 | VALVE POSITION SETPOINT ZIK 2B001 | VALVE IN REMOTE XI 2B001 | VALVE FAULT XA 2B001

BACKUP PLC

VALVE OPEN/ CLOSE CMD YCO 2B001

VALVE POSITION ZI 2B002 | VALVE POSITION SETPOINT ZIK 2B002 | VALVE IN REMOTE XI 2B002 | VALVE FAULT XA 2B002

BACKUP PLC

VALVE OPEN/ CLOSE CMD YCO 2B002

FLOW INDICATION FI 2B001

PUMP NO. 2 H/O/A | RUN R

PUMP NO. 4 H/O/A | RUN R

PUMP NO. 6 H/O/A | RUN R

PUMP NO. 8 H/O/A | RUN R

ALARM RESET

CONTINUATION OF WET WEATHER CONTROL PANEL

480V → MAIN-SWGR AUTOMATIC GENERATOR TRANSFER BREAKER CONTROLLER

MAIN SWITCHGEAR BUILDING MAIN-SWGR

480V → MCC-2A/MCC-2B

WET WEATHER LIFT STATION ELECTRICAL ROOM

PUMP 2 SENSORS 2-I-01 FROM WET WEATHER CONTROL PANEL

PUMP 4 SENSORS 2-I-01 FROM WET WEATHER CONTROL PANEL

PUMP 6 SENSORS 2-I-01 FROM WET WEATHER CONTROL PANEL

PUMP 8 SENSORS 2-I-01 FROM WET WEATHER CONTROL PANEL

RS 2-I-01 FROM WET WEATHER PUMP STATION

36" | 36" | 36"

FLOW METER STATION

LOR HS 2B001A | ZT 2B001 | OSC HS 2B001B | FAULT XA 2B001

480V → E | ZC 2B001

30" | KGV-02B-105 | 30" | PV-02B-001 | 30" | KGV-02B-105

LOR HS 2B002A | ZT 2B002 | OSC HS 2B002B | FAULT XA 2B002

480V → E | ZC 2B002

30" | KGV-02B-106 | 30" | PV-02B-002 | 30" | KGV-02B-106

36" | 30" | 24" | 30"

120V → FIT 2B001 | FE 2B001

30" | 24" | M | 24" | 36" | 36" | EXISTING FORCE MAIN

KGI Kalluri Group, Inc.

TBPE Registration No. F-665
16300 Katy Freeway, Suite 172
Houston, Texas 77094
Phone: (713)-365-9288
PROJECT 4285

QUIDDITY
Texas Board of Professional Engineers and Land Surveyors Reg. No. F-23290
6330 West Loop South, Suite 150 • Bellaire, TX 77401 • 713.777.5337

JOB NO: 00050-0099-01 DATE: 5/7/2026

APPROVED BY: RK

DATE: 05/2026

DESIGNED BY: SLJ

DRAWN BY: RHW

SURVEYED BY: WESTERN GROUP CONSULTANTS
FB NO. P-6414

STATE OF TEXAS
STACY L. JORDAN
148233
LICENSED PROFESSIONAL ENGINEER
04.17.2026

CITY OF HOUSTON
HOUSTON PUBLIC WORKS

SCOTT STREET NO. 1 LIFT STATION REHABILITATION
INSTRUMENTATION

WET WEATHER STATION P&ID SHEET 2

WBS NUMBER	FOR CITY OF HOUSTON USE ONLY
R-000267-127A-4	
DRAWING SCALE	
AS NOTED	
CITY OF HOUSTON PM	
TAHA LOTIA	
DWG NO. 2-I-02	
SHEET NO. 204 OF 220	

F:\Users\KGI-StacyJordan\Kalluri Group, Inc\KGI - Documents\4285-QEL (Scott Street LS)\Drawings\Instrumentation\2-I-02 Wet Weather Pump Station P&ID Sheet 2.dwg

0 1 2 3 4 5 ORIGINAL SCALE IN INCHES FOR REDUCED PLANS

EQUIPMENT AND DEVICE SCHEDULE

ITEM	QUANTITY	DESCRIPTION
A	2	SINGLE CHANNEL INTRINSICALLY SAFE RELAY
B	2	ANALOG SIGNAL DUPLICATING ISOLATOR
C	16	PUMP PROTECTION MODULE
D	1	CISCO MERAKI CELLULAR GATEWAY
E	8	HAND-OFF-AUTO SWITCH, 3 POSITION, HEAVY-DUTY OIL TIGHT WITH 2 SETS OF CONTACT BLOCKS (PUMP CONTROL)
F	8	INDICATING LIGHT, HEAVY DUTY, OIL TIGHT, RED, 24VDC, LED, WITH "RUN" LEGEND
G	1	6 OUTLET POWER STRIP
H	1	SWITCH FOR CABINET LIGHT, 120V, 20A, SPST
I	2	DUPLEX RECEPTACLE, 120V, 20A, 2 WIRE, GROUNDED, GFCI TYPE
J	1	24" LED STRIP LIGHT 120V SUITABLE FOR ZERO DEGREE OPERATION
K	*	NAMEPLATES, SEE SPECIFICATIONS (SEE NAMEPLATE SCHEDULE BELOW)
L	2	PROGRAMMABLE LOGIC CONTROLLER WITH SIGNAL EXPANSION MODULES
M	*	CONTROL RELAY 24VDC RELAY WITH THREE FORM C CONTACTS AND 11 PIN SOCKET BASE
N		FLASHER RELAY
O	1	1 POLE FUSE HOLDER
	1	3 AMP FUSE
P	1	NEMA 12 GASKETED STEEL ENCLOSURES 72"H x 24"D x WIDTH AS REQUIRED
Q	*	TERMINAL BLOCK
R	*	WIRE DUCT 3" DEEP MINIMUM WIDTH AS REQUIRED (20% WIRE FILL MAX)
S	1	GROUND BUS BAR
T	1	ETHERNET SWITCH
U	1	FAN THERMOSTAT
V	1	PUSHBUTTON, BLACK WITH RESET LEGEND
W	1	NOT USED
X	*	FUSED TERMINAL BLOCKS
Y	1	POWER SURGE PROTECTOR - CONTROL POWER
Z	1	PROGRAMMING SCREEN (HMI)
AA		NOT USED
BB	1	120VAC-24VDC POWER SUPPLY, 5A
CC	2	DISCRETE I/O SURGE SUPRESSOR
DD	2	INDICATING LIGHT, HEAVY DUTY, OILTIGHT, GREEN, 24VDC, LED WITH "BACKUP PLC" & "PRIMARY PLC" LEGEND
EE	4	ANALOG I/O SURGE SUPRESSOR
FF	1	FAN
	1	EXHAUST GRILL

* AS SCHEDULED

NAMEPLATE SCHEDULE

N1	SAGEMONT LIFT STATION	N11	PRIMARY PLC
N2	PUMP NO.1	N12	BACKUP PLC
N3	PUMP NO.2	N13	MOTOR DATA
N4	PUMP NO.3		HORSEPOWER (OUTPUT) ----------
N5	PUMP NO.4		RPM AT FULL LOAD ----------
N6	PUMP NO.5		TIME RATING ----------
N7	PUMP NO.6		FREQUENCY ----------
N8	PUMP NO.7		NUMBER OF PHASES ----------
N9	PUMP NO.8		MODEL NUMBER ----------
N10	PROGRAMMING SCREEN		RATED VOLTAGE ----------
			SERVICE FACTOR ----------
			FULL LOAD AMPS ----------
			INSULATION CLASS ----------
			NEMA DESIGN LETTER ----------
			DATE OF MANUFACTURE ----------
			THERMO PROTECTION (IF REQUIRED)--------
			MOISTURE PROTECTION (IF REQUIRED)-------

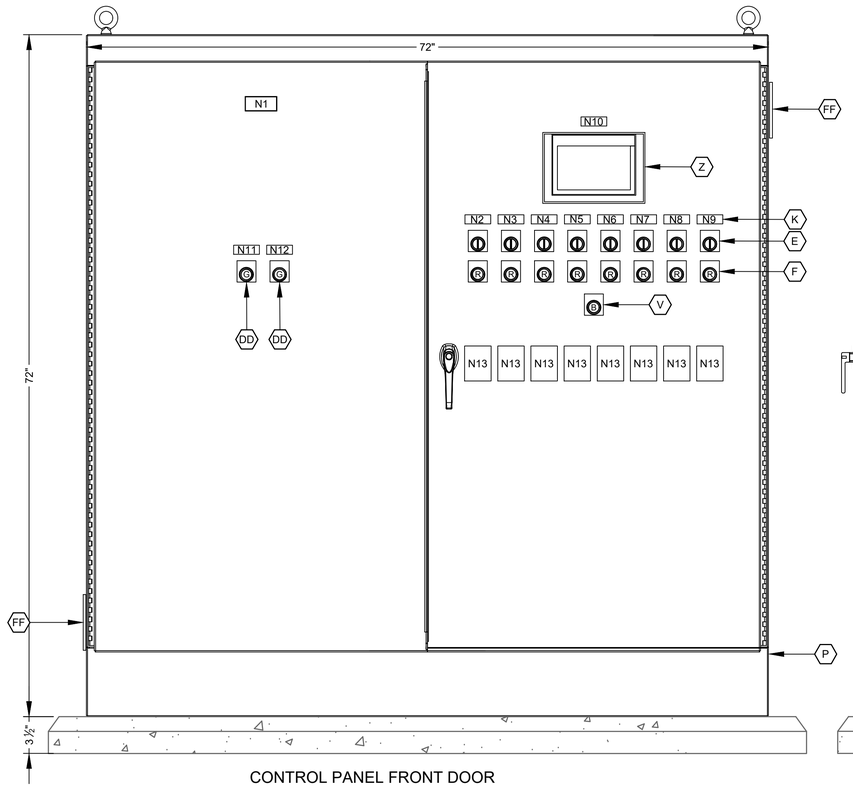

CONTROL PANEL FRONT DOOR

ELEVATION

NTS

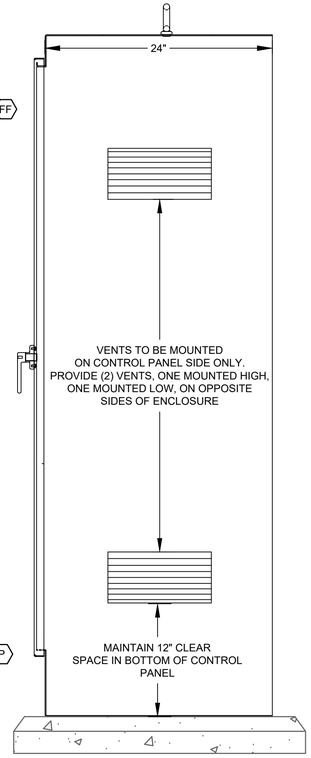

CONTROL PANEL SIDE VIEW

ELEVATION

NTS

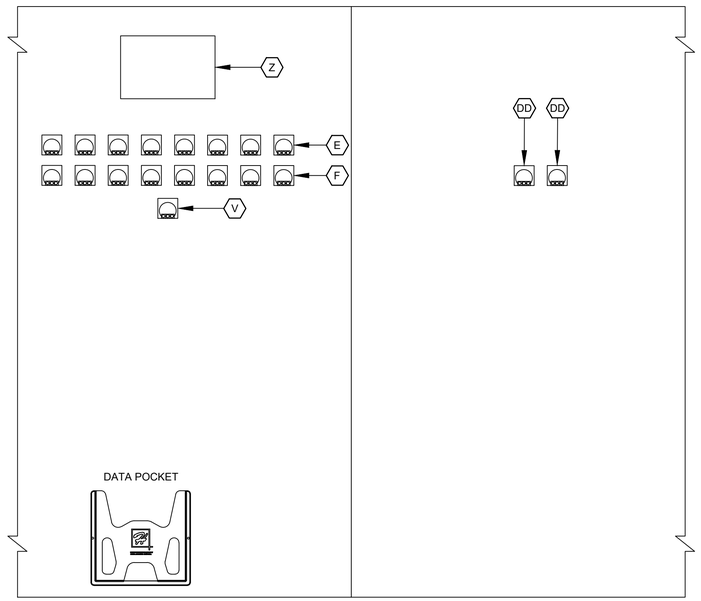

CONTROL PANEL BACK DOOR

ELEVATION

NTS

NO.	DATE	REVISIONS	APP.

GENERAL NOTES:

A. NAMEPLATES SHALL BE MOUNTED TO PANELS USING STAINLESS STEEL HARDWARE.

B. CONTROL PANEL SHALL BE UL698A LISTED ENCLOSED INDUSTRIAL CONTROL PANEL.

C. REFER TO SPECIFICATION 13325 & 13327 FOR ADDITIONAL INFORMATION.

KGI Kalluri Group, Inc.
TBPE Registration No. F-665
16300 Katy Freeway, Suite 172
Houston, Texas 77094
Phone: (713)-365-9288
PROJECT 4285

QUIDDITY
Texas Board of Professional Engineers and Land Surveyors Reg. No. F-23290
6330 West Loop South, Suite 150 • Bellaire, TX 77401 • 713.777.5337

JOB NO: 00050-0099-01 DATE: 5/7/2026

APPROVED BY: RK

DATE: 05/2026

DESIGNED BY: SLJ

DRAWN BY: RHW

SURVEYED BY: WESTERN GROUP CONSULTANTS
FB NO. P-6414

STATE OF TEXAS
STACY L. JORDAN
148233
LICENSED PROFESSIONAL ENGINEER
9.12.2025

CITY OF HOUSTON
HOUSTON PUBLIC WORKS

SCOTT STREET NO. 1 LIFT STATION REHABILITATION
INSTRUMENTATION
WET WEATHER CONTROL CABINET EQUIPMENT LAYOUT & SCHEDULE

WBS NUMBER
R-000267-127A-4

DRAWING SCALE
AS NOTED

CITY OF HOUSTON PM
TAHA LOTIA

DWG NO. 2-I-03

SHEET NO. 205 OF 220

FOR CITY OF HOUSTON USE ONLY

F:\Users\KGI-StacyJordan\Kalluri Group, Inc\KGI - Documents\4285-QEL (Scott Street LS)\Drawings\Instrumentation\2-I-03 Wet Weather Control Cabinet Equipment Layout & Schedule.dwg

0 1 2 3 4 5 ORIGINAL SCALE IN INCHES FOR REDUCED PLANS



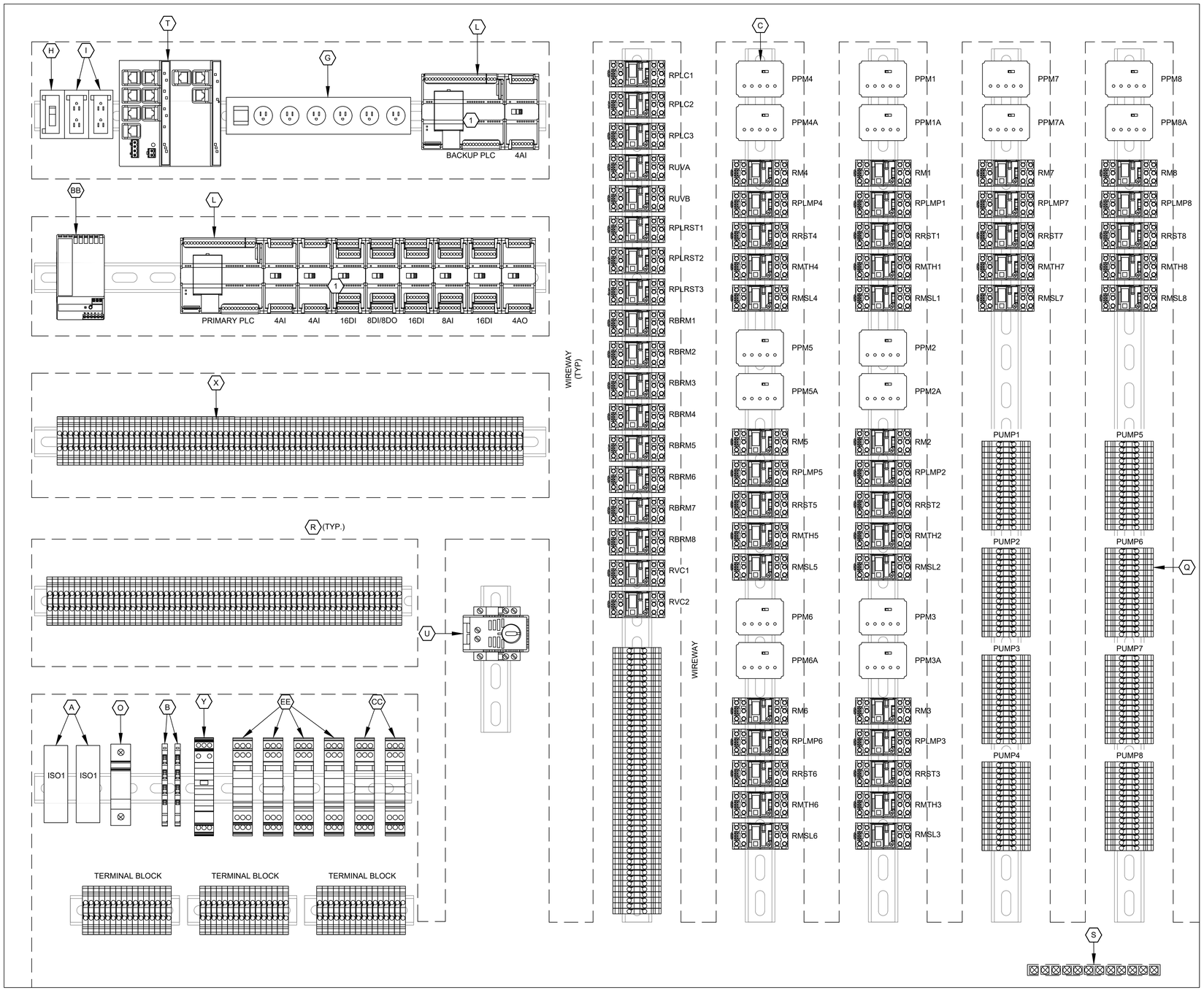

CONTROL PANEL INTERIOR

ELEVATION

NTS

NO.	DATE	REVISIONS	APP.

GENERAL NOTES:

A. CONTROL PANEL SHALL BE UL508A LISTED ENCLOSED INDUSTRIAL CONTROL PANEL. PANEL SHALL BE DESIGNED, CONSTRUCTED AND INSTALLED IN ACCORDANCE WITH NEC AND UL STANDARDS.

B. REFER TO SPECIFICATION 13325 & 13327 FOR ADDITIONAL INFORMATION.

C. LAYOUT SHOWN FOR REFERENCE ONLY. CONTRACTOR SHALL BE RESPONSIBLE FOR FINAL LAYOUT AND QUANTITIES.

KEYED NOTES:

(1) CONTRACTOR SHALL REFER TO THE P&IDS AND THE CONTROL WIRING DIAGRAMS TO CONFIRM THE I/O CARDS REQUIRED TO PROVIDE ALL THE I/O POINTS ALONG WITH THE SPARES FOR BOTH THE PRIMARY & BACKUP PLC.

LEGEND	
TAG	DESCRIPTION
PPM	PUMP PROTECTION MODULE
RBRM	BACKUP SYSTEM RUN RELAY
RM	PUMP RUN AUX RELAY
RPLMP	PLC RUN PUMP RELAY
RRST	PUMP RESET AUX RELAY
RMTH	MOTOR HIGH TEMPERATURE ALARM RELAY
RMSL	MOTOR SEAL LEAK ALARM RELAY
RPLC	PLC MODE AUX RELAY
RUV	UNDER VOLTAGE RELAY
RPLRST	PLC RESET RELAY
ISO	INTRINSICALLY SAFE RELAY
RVC	VALVE CONTROL RELAY

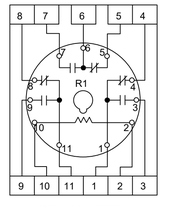

RELAY ITEM

DETAIL

NTS

KGI Kalluri Group, Inc.
TBPE Registration No. F-665
16300 Katy Freeway, Suite 172
Houston, Texas 77094
Phone: (713)-365-9288
PROJECT 4285

QUIDDITY
Texas Board of Professional Engineers and Land Surveyors Reg. No. F-23290
6330 West Loop South, Suite 150 • Bellaire, TX 77401 • 713.777.5337

JOB NO: 00050-0099-01 DATE: 5/7/2026

APPROVED BY: RK

DATE: 05/2026

DESIGNED BY: SLJ

DRAWN BY: RHW

SURVEYED BY: WESTERN GROUP CONSULTANTS
FB NO. P-6414

STATE OF TEXAS
STACY L. JORDAN
148233
LICENSED PROFESSIONAL ENGINEER
9.12.2025

CITY OF HOUSTON
HOUSTON PUBLIC WORKS

SCOTT STREET NO. 1 LIFT STATION REHABILITATION
INSTRUMENTATION
WET WEATHER CONTROL CABINET EQUIPMENT LAYOUT

WBS NUMBER	FOR CITY OF HOUSTON USE ONLY
R-000267-127A-4	
DRAWING SCALE	
AS NOTED	
CITY OF HOUSTON PM	
TAHA LOTIA	
DWG NO. 2-I-04	
SHEET NO. 206 OF 220	

F:\Users\KGI-StacyJordan\Kalluri Group, Inc\KGI - Documents\4285-QEL (Scott Street LS)\Drawings\Instrumentation\2-I-04 Wet Weather Control Cabinet Equipment Layout.dwg

ORIGINAL SCALE IN INCHES FOR REDUCED PLANS

FIELD | DOOR | WET WEATHER LIFT STATION CONTROL PANEL — INTERIOR PANEL | PLC

L1 — 120VAC POWER FROM PANELBOARD — L1N

L1A — JE-100B CONTROL POWER SURGE PROTECTOR — L1N

24VDC (3 — 3N)

RPLC3 (11 — 8)

OIT

BACK UP PLC

36A 50mA I0.1 BACKUP PLC MODE ACTIVE

(1)

NORMAL

GENERATOR

AUTOMATIC BREAKER CONTROLLER PANEL

49

50 — 50 — 50mA — I0.4 ATS IN NORMAL SOURCE

51

52 — 52 — 50mA — I0.5 ATS IN EMERGENCY SOURCE

HS-1A RESET — TO SHEET 2-I-08

118 — 118 — 50mA — I0.6 ALARMS RESET

DRY WELL FLOATS — HIGH LEVEL FLOAT FSE3 — INSTRUMENTATION JUNCTION BOX EAST

54 — 54 — 50mA — I0.7 DRY PIT EAST HIGH LEVEL ALARM

53 — (2)

DRY WELL FLOATS — HIGH LEVEL FLOAT FSW3 — INSTRUMENTATION JUNCTION BOX WEST

56 — 56 — 50mA — I0.3 DRY PIT WEST HIGH LEVEL ALARM

55 — (2)

119 — 119 — 1A — Q0.4 ALARMS RESET

RPLRST1 (2 — R — 10)

RPLRST2 (2 — R — 10)

RPLRST3 (2 — R — 10)

L1A — MATCHLINE 1 — L1N

KEYED NOTES:

1. PROVIDE DRY CONTACTS FOR MAIN UTILITY BREAKER CLOSED STATUS AND FOR GENERATOR BREAKER CLOSED STATUS.
2. ALL FLOAT CONTROL CIRCUIT CONDUCTORS SHALL HAVE YELLOW INSULATION.

LEGEND

- △ DEVICE OR FIELD TERMINAL LOCATED AT MOTOR
- ✱ DEVICE OR FIELD TERMINAL LOCATED REMOTE
- □ DEVICE OR FIELD TERMINAL LOCATED AT MCC/POWER PANEL
- ■ FIELD TERMINAL LOCATED AT CONTROL PANEL
- ▲ REMOTE TERMINAL
- ● DEVICE TERMINAL NO.
- ◆ PLC INTERFACE TERMINAL

NO.	DATE	REVISIONS	APP.

KGI Kalluri Group, Inc.
TBPE Registration No. F-665
16300 Katy Freeway, Suite 172
Houston, Texas 77094
Phone: (713)-365-9288
PROJECT 4285

QUIDDITY
Texas Board of Professional Engineers and Land Surveyors Reg. No. F-23290
6330 West Loop South, Suite 150 • Bellaire, TX 77401 • 713.777.5337

JOB NO: 00050-0099-01 DATE: 5/7/2026

APPROVED BY: RK

DATE: 05/2026

DESIGNED BY: SLJ

DRAWN BY: RHW

SURVEYED BY: WESTERN GROUP CONSULTANTS
FB NO. P-6414

STATE OF TEXAS — STACY L. JORDAN — 148233 — LICENSED PROFESSIONAL ENGINEER — 05.12.2026

CITY OF HOUSTON
HOUSTON PUBLIC WORKS

SCOTT STREET NO. 1 LIFT STATION REHABILITATION
INSTRUMENTATION
WET WEATHER CONTROL PANEL
CONTROL WIRING DIAGRAM - I

WBS NUMBER: R-000267-127A-4

DRAWING SCALE: AS NOTED

CITY OF HOUSTON PM: TAHA LOTIA

DWG NO. 2-I-05

SHEET NO. 207 OF 220

FOR CITY OF HOUSTON USE ONLY

F:\Users\KGI-StacyJordan\Kalluri Group, Inc\KGI - Documents\4285-QEL (Scott Street LS)\Drawings\Instrumentation\2-I-05 Wet Weather Control Panel Control Wiring Diagram - I.dwg

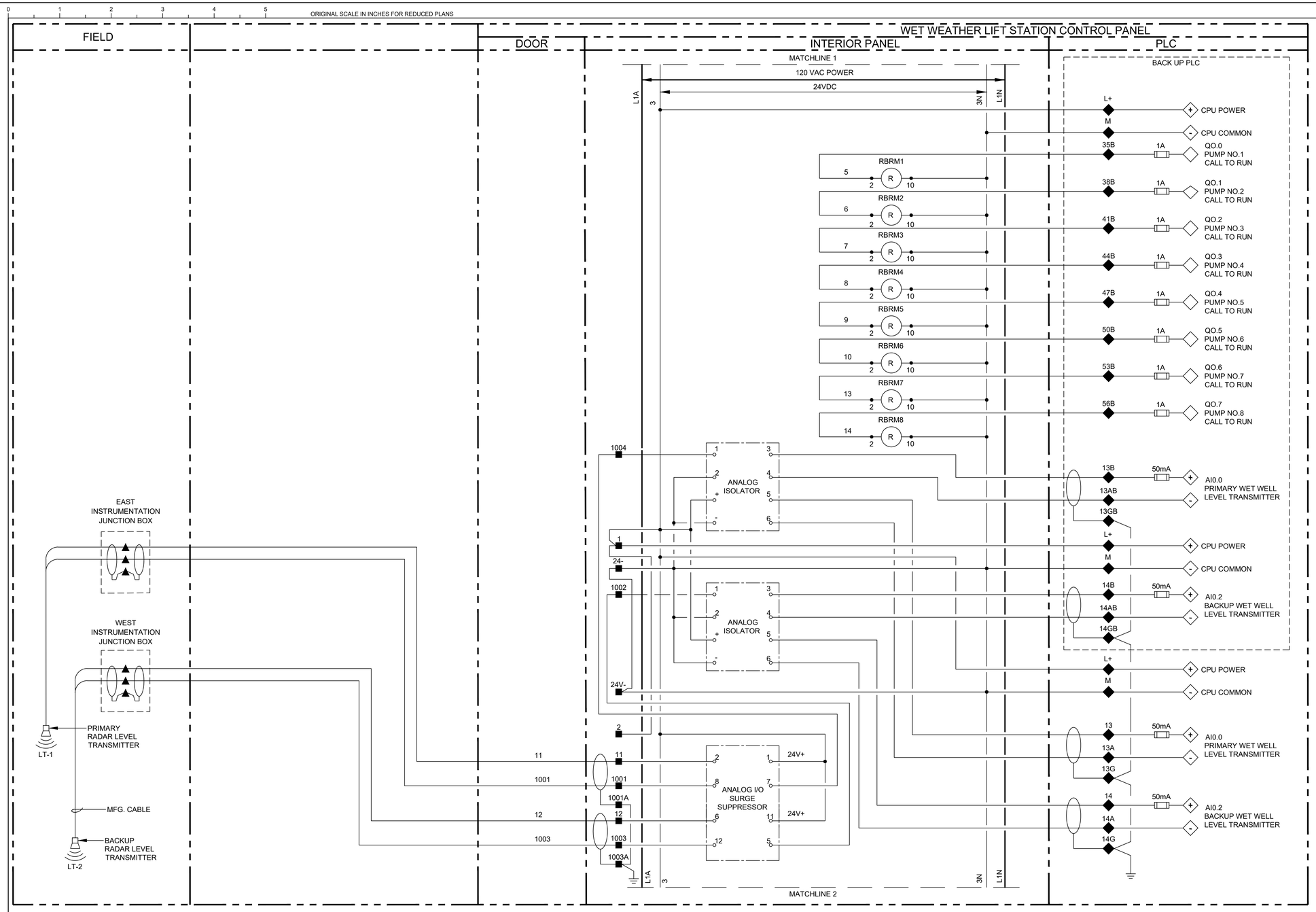

LEGEND

- △ DEVICE OR FIELD TERMINAL LOCATED AT MOTOR
- ★ DEVICE OR FIELD TERMINAL LOCATED REMOTE
- □ DEVICE OR FIELD TERMINAL LOCATED AT MCC/POWER PANEL
- ■ FIELD TERMINAL LOCATED AT CONTROL PANEL
- ▲ REMOTE TERMINAL
- ● DEVICE TERMINAL NO.
- ◆ PLC INTERFACE TERMINAL

NO.	DATE	REVISIONS	APP.

KGI Kalluri Group, Inc.
TBPE Registration No. F-665
16300 Katy Freeway, Suite 172
Houston, Texas 77094
Phone: (713)-365-9288
PROJECT 4285

QUIDDITY
Texas Board of Professional Engineers and Land Surveyors Reg. No. F-23290
6330 West Loop South, Suite 150 • Bellaire, TX 77401 • 713.777.5337

JOB NO: 00050-0099-01 DATE: 5/7/2026

APPROVED BY: RK
DATE: 05/2026
DESIGNED BY: SLJ
DRAWN BY: RHW
SURVEYED BY: WESTERN GROUP CONSULTANTS
FB NO. P-6414

STATE OF TEXAS
STACY L. JORDAN
148233
LICENSED PROFESSIONAL ENGINEER
06.12.2026

CITY OF HOUSTON
HOUSTON PUBLIC WORKS

SCOTT STREET NO. 1
LIFT STATION REHABILITATION
INSTRUMENTATION
WET WEATHER
CONTROL PANEL
CONTROL WIRING DIAGRAM - II

WBS NUMBER
R-000267-127A-4
DRAWING SCALE
AS NOTED
CITY OF HOUSTON PM
TAHA LOTIA
DWG NO. 2-I-06
SHEET NO. 208 OF 220

FOR CITY OF HOUSTON USE ONLY

F:\Users\KGI-StacyJordan\Kalluri Group, Inc\KGI - Documents\4285-QEL (Scott Street LS)\Drawings\Instrumentation\2-I-06 Wet Weather Control Panel Control Wiring Diagram - II.dwg

ORIGINAL SCALE IN INCHES FOR REDUCED PLANS

FIELD | MOTOR CONTROL CENTER | DOOR | INTERIOR PANEL | WET WEATHER LIFT STATION CONTROL PANEL | PLC

MATCHLINE 2

120VAC POWER

24VDC

L1A 3 3N L1N

1M DI COMMON

2M AI COMMON

1L DO POWER

3 DO POWER

30 1A Q0.0 SPARE

32 50mA I0.0 PLC INTRUSION ALARM

L1 N MS INTRUSION SWITCH

L1 N MS INSTRUSION SWITCH

POWER MONITOR (MCC-2A) POWER MONITOR (MCC-2B)

L N CAT 5 CAT 5

ETHERNET SWITCH CAT 5 PROFINET COMM.

RUVA 6 7

RUVB 6 7

34 50mA I0.1 PHASE FAILURE UNDER VOLTAGE

57 RUVB R 2 10

56 RUVA R 2 10

ØA ØB ØC PM1 (MCC-2A) 1 3 5

SLA-440-ALE PHASE MONITOR 7 8 9 10 11 12

N/C

RPLC1 R 2 10

RPLC2 R 2 10

RPLC3 R 2 10

YI-1 G PRIMARY PLC

RPLC3

YI-2 G BACKUP PLC

38 50mA Q0.1 PLC MODE ACTIVE

ØA ØB ØC PM2 (MCC-2B) 1 3 5

SLA-440-ALE PHASE MONITOR 7 8 9 10 11 12

N/C

55

YI-2 BUILDING EXTERIOR ALARM LIGHT R

45 50mA Q0.2 HIGH LEVEL ALARM

BACK UP PLC

RUVA 11 9

RUVB 11 9

18B 50mA I0.0 PHASE FAILURE UNDER VOLTAGE

L1A 24+ 24- L1N

MATCHLINE 3

LEGEND

- △ DEVICE OR FIELD TERMINAL LOCATED AT MOTOR
- ★ DEVICE OR FIELD TERMINAL LOCATED REMOTE
- □ DEVICE OR FIELD TERMINAL LOCATED AT MCC/POWER PANEL
- ■ FIELD TERMINAL LOCATED AT CONTROL PANEL
- ▲ REMOTE TERMINAL
- ● DEVICE TERMINAL NO.
- ◆ PLC INTERFACE TERMINAL

NO.	DATE	REVISIONS	APP.

KGI Kalluri Group, Inc.

TBPE Registration No. F-665
16300 Katy Freeway, Suite 172
Houston, Texas 77094
Phone: (713)-365-9288
PROJECT 4285

QUIDDITY
Texas Board of Professional Engineers and Land Surveyors Reg. No. F-23290
6330 West Loop South, Suite 150 • Bellaire, TX 77401 • 713.777.5337

JOB NO: 00050-0099-01 DATE: 5/7/2026

APPROVED BY: RK

DATE: 05/2026

DESIGNED BY: SLJ

DRAWN BY: RHW

SURVEYED BY: WESTERN GROUP CONSULTANTS
FB NO. P-6414

STATE OF TEXAS
STACY L. JORDAN
148233
LICENSED PROFESSIONAL ENGINEER
04.16.2026

CITY OF HOUSTON
HOUSTON PUBLIC WORKS

SCOTT STREET NO. 1 LIFT STATION REHABILITATION
INSTRUMENTATION
WET WEATHER CONTROL PANEL CONTROL WIRING DIAGRAM - III

WBS NUMBER	FOR CITY OF HOUSTON USE ONLY
R-000267-127A-4	
DRAWING SCALE	
AS NOTED	
CITY OF HOUSTON PM	
TAHA LOTIA	
DWG NO. 2-I-07	
SHEET NO. 209 OF 220	

F:\Users\KGI-StacyJordan\Kalluri Group, Inc\KGI - Documents\4285-QEL (Scott Street LS)\Drawings\Instrumentation\2-I-07 Wet Weather Control Panel Control Wiring Diagram - III.dwg

ORIGINAL SCALE IN INCHES FOR REDUCED PLANS

FIELD | MOTOR CONTROL CENTER | DOOR | INTERIOR PANEL | WET WEATHER LIFT STATION CONTROL PANEL | PLC

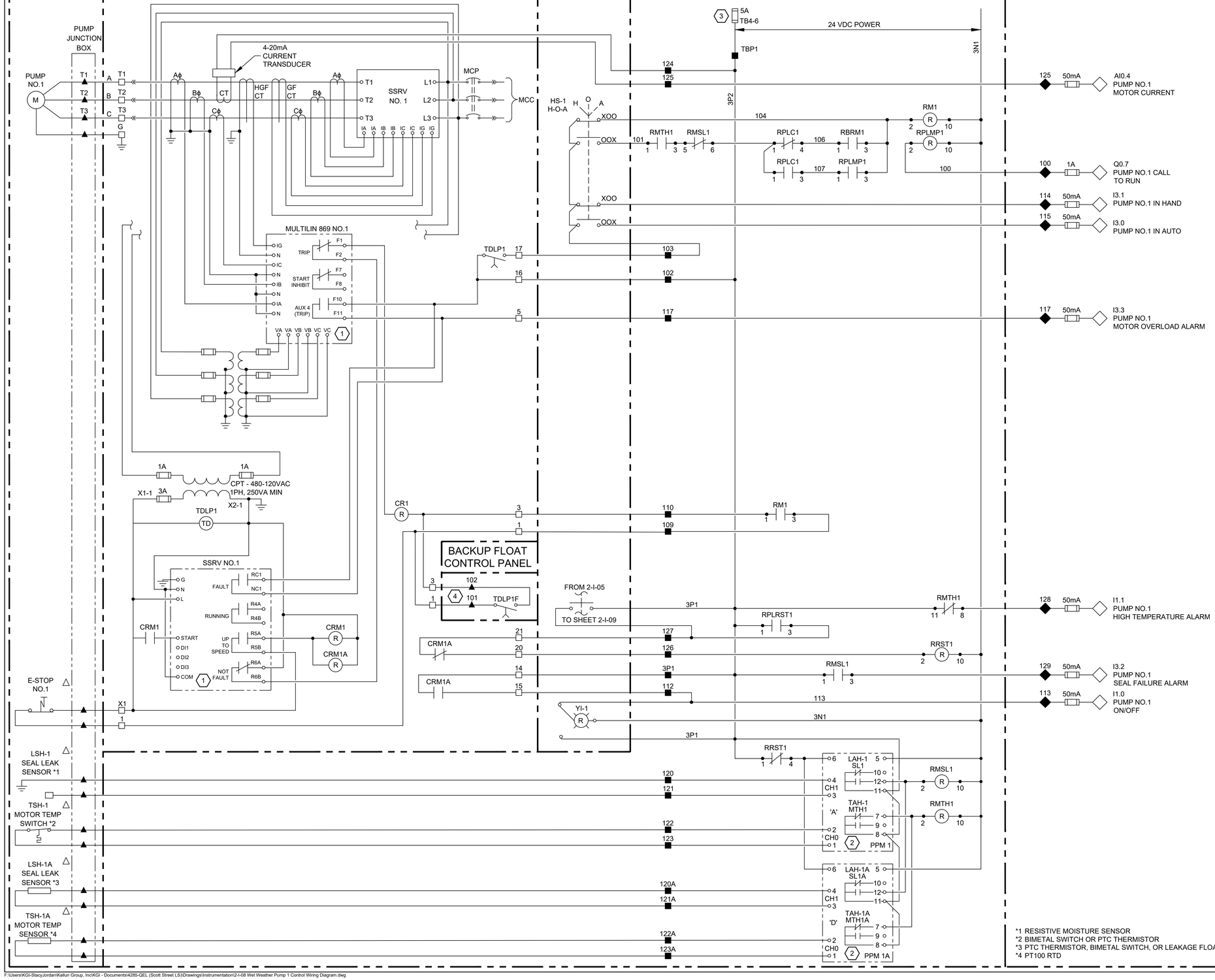

*1 RESISTIVE MOISTURE SENSOR
*2 BIMETAL SWITCH OR PTC THERMISTOR
*3 PTC THERMISTOR, BIMETAL SWITCH, OR LEAKAGE FLOAT
*4 PT100 RTD

NO.	DATE	REVISIONS	APP.

LEGEND

- △ DEVICE OR FIELD TERMINAL LOCATED AT MOTOR
- ▪ DEVICE OR FIELD TERMINAL LOCATED REMOTE
- □ DEVICE OR FIELD TERMINAL LOCATED AT MCC/POWER PANEL
- ■ FIELD TERMINAL LOCATED AT CONTROL PANEL
- ▲ REMOTE TERMINAL
- ● DEVICE TERMINAL NO.
- ◆ PLC INTERFACE TERMINAL

KEYED NOTES:

1. FAULT AND TRIP RELAY OUTPUT CONTACT STATUSES SHOWN WITH THE DEVICE ENERGIZED AND IN THE NON-FAULT OR NON-TRIP STATE.
2. PUMP PROTECTION MODULE(S) (PPM) AND ASSOCIATED SCHEMATIC WIRING ARE BASED ON PUMPSAFE BRAND MODULES, TYPE 'A', 'B', OR 'D', AS INDICATED. OUTPUT CONTACT STATUS IS SHOWN IN THE ENERGIZED, NON-ALARM CONDITION. THE SCHEMATIC ILLUSTRATES THE REQUIRED PUMP MOISTURE AND TEMPERATURE MONITORING AND PROTECTION. THE CONTRACTOR SHALL COORDINATE WITH THE PUMP MANUFACTURER REGARDING THE SUPPLIED PPM(S) AND THE SENSORS INTEGRATED IN THE PUMPS, AND SHALL MODIFY THE CIRCUIT AS NECESSARY.
3. FUSED TERMINAL ON TERMINAL BLOCK TB4 POWERED BY PERMISSIVE CONTACT FROM RELAY 'RUVA' TO OPERATE THE PPM(S) AND THE PUMP PLC LOGIC. SEE CONTROL POWER & COMMUNICATIONS WIRING DIAGRAM ON SHEET 2-I-18 FOR DETAILS.
4. ALL FLOAT CONTROL CIRCUIT CONDUCTORS SHALL HAVE YELLOW INSULATION.

KGI Kalluri Group, Inc.
TBPE Registration No. F-665
16300 Katy Freeway, Suite 172
Houston, Texas 77094
Phone: (713)-365-9288
PROJECT 4285

QUIDDITY
Texas Board of Professional Engineers and Land Surveyors Reg. No. F-23290
6330 West Loop South, Suite 150 • Bellaire, TX 77401 • 713.777.5337

JOB NO: 00050-0099-01 DATE: 5/7/2026

APPROVED BY: RK
DATE: 05/2026
DESIGNED BY: SLJ
DRAWN BY: RHW
SURVEYED BY: WESTERN GROUP CONSULTANTS
FB NO. P-6414

STATE OF TEXAS — STACY L. JORDAN — 148233 — LICENSED PROFESSIONAL ENGINEER — 05.12.2026

CITY OF HOUSTON
HOUSTON PUBLIC WORKS

SCOTT STREET NO. 1 LIFT STATION REHABILITATION
INSTRUMENTATION
WET WEATHER
PUMP 1 CONTROL
WIRING DIAGRAM

WBS NUMBER	FOR CITY OF HOUSTON USE ONLY
R-000267-127A-4	
DRAWING SCALE	
AS NOTED	
CITY OF HOUSTON PM	
TAHA LOTIA	
DWG NO. 2-I-08	
SHEET NO. 210 OF 220	

F:\Users\KGI-StacyJordan\Kalluri Group, Inc\KGI - Documents\4285-QEL (Scott Street LS)\Drawings\Instrumentation\2-I-08 Wet Weather Pump 1 Control Wiring Diagram.dwg

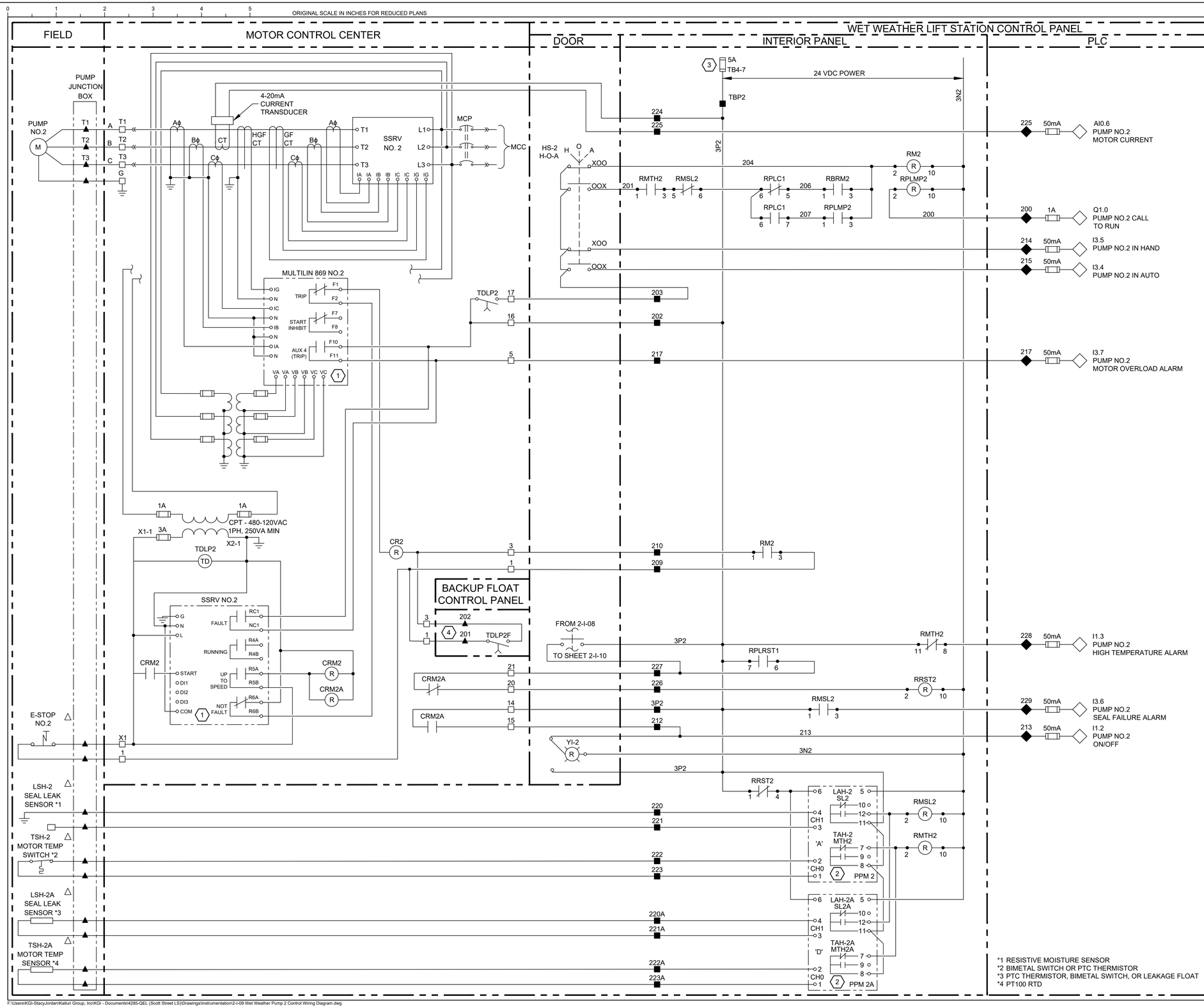

NO.	DATE	REVISIONS	APP.

LEGEND

- △ DEVICE OR FIELD TERMINAL LOCATED AT MOTOR
- ⋆ DEVICE OR FIELD TERMINAL LOCATED REMOTE
- □ DEVICE OR FIELD TERMINAL LOCATED AT MCC/POWER PANEL
- ■ FIELD TERMINAL LOCATED AT CONTROL PANEL
- ▲ REMOTE TERMINAL
- ● DEVICE TERMINAL NO.
- ◆ PLC INTERFACE TERMINAL

KEYED NOTES:

1. FAULT AND TRIP RELAY OUTPUT CONTACT STATUSES SHOWN WITH THE DEVICE ENERGIZED AND IN THE NON-FAULT OR NON-TRIP STATE.
2. PUMP PROTECTION MODULE(S) (PPM) AND ASSOCIATED SCHEMATIC WIRING ARE BASED ON PUMPSAFE BRAND MODULES, TYPE 'A', 'B', OR 'D', AS INDICATED. OUTPUT CONTACT STATUS IS SHOWN IN THE ENERGIZED, NON-ALARM CONDITION. THE SCHEMATIC ILLUSTRATES THE REQUIRED PUMP MOISTURE AND TEMPERATURE MONITORING AND PROTECTION. THE CONTRACTOR SHALL COORDINATE WITH THE PUMP MANUFACTURER REGARDING THE SUPPLIED PPM(S) AND THE SENSORS INTEGRATED IN THE PUMPS, AND SHALL MODIFY THE CIRCUIT AS NECESSARY.
3. FUSED TERMINAL ON TERMINAL BLOCK TB4 POWERED BY PERMISSIVE CONTACT FROM RELAY 'RUVB' TO OPERATE THE PPM(S) AND THE PUMP PLC LOGIC. SEE CONTROL POWER & COMMUNICATIONS WIRING DIAGRAM ON SHEET 2-I-18 FOR DETAILS.
4. ALL FLOAT CONTROL CIRCUIT CONDUCTORS SHALL HAVE YELLOW INSULATION.

KGI Kalluri Group, Inc.
TBPE Registration No. F-665
16300 Katy Freeway, Suite 172
Houston, Texas 77094
Phone: (713)-365-9288
PROJECT 4285

QUIDDITY
Texas Board of Professional Engineers and Land Surveyors Reg. No. F-23290
6330 West Loop South, Suite 150 • Bellaire, TX 77401 • 713.777.5337

JOB NO: 00050-0099-01 DATE: 5/7/2026

APPROVED BY: RK
DATE: 05/2026
DESIGNED BY: SLJ
DRAWN BY: RHW
SURVEYED BY: WESTERN GROUP CONSULTANTS
FB NO. P-6414

STATE OF TEXAS
STACY L. JORDAN
148233
LICENSED PROFESSIONAL ENGINEER
06.12.2026

CITY OF HOUSTON
HOUSTON PUBLIC WORKS

SCOTT STREET NO. 1
LIFT STATION REHABILITATION
INSTRUMENTATION
WET WEATHER
PUMP 2 CONTROL
WIRING DIAGRAM

WBS NUMBER: R-000267-127A-4
DRAWING SCALE: AS NOTED
CITY OF HOUSTON PM: TAHA LOTIA
DWG NO. 2-I-09
SHEET NO. 211 OF 220

FOR CITY OF HOUSTON USE ONLY

F:\Users\KGI-StacyJordan\Kalluri Group, Inc\KGI - Documents\4285-QEL (Scott Street LS)\Drawings\Instrumentation\2-I-09 Wet Weather Pump 2 Control Wiring Diagram.dwg

ORIGINAL SCALE IN INCHES FOR REDUCED PLANS

FIELD | MOTOR CONTROL CENTER | DOOR | INTERIOR PANEL | WET WEATHER LIFT STATION CONTROL PANEL | PLC

NO.	DATE	REVISIONS	APP.

PUMP JUNCTION BOX

PUMP NO.3

4-20mA CURRENT TRANSDUCER

SSRV NO. 3

MCP

MCC

HGF CT

GF CT

CT

MULTILIN 869 NO.3

IG, N, IC, N, IB, N, IA, N

TRIP F1 F2

START INHIBIT F7 F8

AUX 4 (TRIP) F10 F11

VA VA VB VB VC VC

1

CPT - 480-120VAC 1PH, 250VA MIN

1A 1A

X1-1 3A X2-1

TDLP3 TD

SSRV NO.3

G, N, L

FAULT RC1 NC1

RUNNING R4A R4B

UP TO SPEED R5A R5B

NOT FAULT R6A R6B

START, DI1, DI2, DI3, COM

CRM3 CRM3 R CRM3A R

E-STOP NO.3

X1 1

LSH-3 SEAL LEAK SENSOR *1

TSH-3 MOTOR TEMP SWITCH *2

LSH-3A SEAL LEAK SENSOR *3

TSH-3A MOTOR TEMP SENSOR *4

3 5A TB4-8

24 VDC POWER

3N3

TBP3

3P3

324

325

325 50mA AI0.8 PUMP NO.3 MOTOR CURRENT

HS-3 H-O-A H O A

XOO

OOX

304

301

RMTH3 1 3

RMSL3 5 6

RPLC1 11 8

RBRM3 1 3

RM3 2 R 10

RPLMP3 2 R 10

RPLC1 11 9

RPLMP3 307 1 3

306

300

300 1A Q1.1 PUMP NO.3 CALL TO RUN

314 50mA I4.1 PUMP NO.3 IN HAND

315 50mA I4.0 PUMP NO.3 IN AUTO

TDLP3 17 16 5

303

302

317

317 50mA I4.3 PUMP NO.3 MOTOR OVERLOAD ALARM

CR3 R 3 1

310 309

RM3 1 3

BACKUP FLOAT CONTROL PANEL

3 1 302 4 301 TDLP3F

FROM 2-I-09

TO SHEET 2-I-11

3P3

RMTH3 11 8

328 50mA I1.5 PUMP NO.3 HIGH TEMPERATURE ALARM

RPLRST1 11 9

327

CRM3A 21 20

326

RRST3 2 R 10

RMSL3 1 3

329 50mA I4.2 PUMP NO.3 SEAL FAILURE ALARM

CRM3A 14 15

3P3 312

313 50mA I1.4 PUMP NO.3 ON/OFF

313

YI-3 R

3N3

3P3

RRST3 1 4

320 321

322 323

320A 321A

322A 323A

LAH-3 SL3 5 10 12 11

RMSL3 2 R 10

TAH-3 MTH3 7 9 8

RMTH3 2 R 10

'A' CH1 CH0

2 PPM 3

LAH-3A SL3A 5 10 12 11

TAH-3A MTH3A 7 9 8

'D' CH1 CH0

2 PPM 3A

*1 RESISTIVE MOISTURE SENSOR
*2 BIMETAL SWITCH OR PTC THERMISTOR
*3 PTC THERMISTOR, BIMETAL SWITCH, OR LEAKAGE FLOAT
*4 PT100 RTD

LEGEND

- △ DEVICE OR FIELD TERMINAL LOCATED AT MOTOR
- ▪ DEVICE OR FIELD TERMINAL LOCATED REMOTE
- □ DEVICE OR FIELD TERMINAL LOCATED AT MCC/POWER PANEL
- ■ FIELD TERMINAL LOCATED AT CONTROL PANEL
- ▲ REMOTE TERMINAL
- ● DEVICE TERMINAL NO.
- ◆ PLC INTERFACE TERMINAL

KEYED NOTES:

1. FAULT AND TRIP RELAY OUTPUT CONTACT STATUSES SHOWN WITH THE DEVICE ENERGIZED AND IN THE NON-FAULT OR NON-TRIP STATE.
2. PUMP PROTECTION MODULE(S) (PPM) AND ASSOCIATED SCHEMATIC WIRING ARE BASED ON PUMPSAFE BRAND MODULES, TYPE 'A', 'B', OR 'D', AS INDICATED. OUTPUT CONTACT STATUS IS SHOWN IN THE ENERGIZED, NON-ALARM CONDITION. THE SCHEMATIC ILLUSTRATES THE REQUIRED PUMP MOISTURE AND TEMPERATURE MONITORING AND PROTECTION. THE CONTRACTOR SHALL COORDINATE WITH THE PUMP MANUFACTURER REGARDING THE SUPPLIED PPM(S) AND THE SENSORS INTEGRATED IN THE PUMPS, AND SHALL MODIFY THE CIRCUIT AS NECESSARY.
3. FUSED TERMINAL ON TERMINAL BLOCK TB4 POWERED BY PERMISSIVE CONTACT FROM RELAY 'RUVA' TO OPERATE THE PPM(S) AND THE PUMP PLC LOGIC. SEE CONTROL POWER & COMMUNICATIONS WIRING DIAGRAM ON SHEET 2-I-18 FOR DETAILS.
4. ALL FLOAT CONTROL CIRCUIT CONDUCTORS SHALL HAVE YELLOW INSULATION.

KGI Kalluri Group, Inc.
TBPE Registration No. F-665
16300 Katy Freeway, Suite 172
Houston, Texas 77094
Phone: (713)-365-9288
PROJECT 4285

QUIDDITY
Texas Board of Professional Engineers and Land Surveyors Reg. No. F-23290
6330 West Loop South, Suite 150 • Bellaire, TX 77401 • 713.777.5337

JOB NO: 00050-0099-01 DATE: 5/7/2026

APPROVED BY: RK

DATE: 05/2026

DESIGNED BY: SLJ

DRAWN BY: RHW

SURVEYED BY: WESTERN GROUP CONSULTANTS

FB NO. P-6414

STATE OF TEXAS — STACY L. JORDAN — 148233 — LICENSED PROFESSIONAL ENGINEER — 05.12.2026

CITY OF HOUSTON

HOUSTON PUBLIC WORKS

SCOTT STREET NO. 1 LIFT STATION REHABILITATION

INSTRUMENTATION

WET WEATHER PUMP 3 CONTROL WIRING DIAGRAM

WBS NUMBER	FOR CITY OF HOUSTON USE ONLY
R-000267-127A-4	
DRAWING SCALE	
AS NOTED	
CITY OF HOUSTON PM	
TAHA LOTIA	
DWG NO. 2-I-10	
SHEET NO. 212 OF 220	

F:\Users\KGI-StacyJordan\Kalluri Group, Inc\KGI - Documents\4285-QEL (Scott Street LS)\Drawings\Instrumentation\2-I-10 Wet Weather Pump 3 Control Wiring Diagram.dwg

ORIGINAL SCALE IN INCHES FOR REDUCED PLANS

FIELD | MOTOR CONTROL CENTER | DOOR | INTERIOR PANEL | WET WEATHER LIFT STATION CONTROL PANEL | PLC

NO.	DATE	REVISIONS	APP.

PUMP JUNCTION BOX

PUMP NO.4

4-20mA CURRENT TRANSDUCER

SSRV NO. 4

MCP

MCC

MULTILIN 869 NO.4

CPT - 480-120VAC 1PH, 250VA MIN

TDLP4

SSRV NO.4

BACKUP FLOAT CONTROL PANEL

TDLP4F

FROM 2-I-10

TO SHEET 2-I-12

E-STOP NO.4

LSH-4 SEAL LEAK SENSOR *1

TSH-4 MOTOR TEMP SWITCH *2

LSH-4A SEAL LEAK SENSOR *3

TSH-4A MOTOR TEMP SENSOR *4

5A TB4-9 — 24 VDC POWER — 3N4

TBP4

HS-4 H-O-A

RMTH4 RMSL4 RPLC2 RBRM4 RPLMP4 RM4 RPLRST2 RRST4 YI-4

LAH-4 SL4 LAH-4A SL4A TAH-4 MTH4 TAH-4A MTH4A

PPM 4 PPM 4A

425 50mA AI1.0 PUMP NO.4 MOTOR CURRENT

400 1A Q2.0 PUMP NO.4 CALL TO RUN

414 50mA I4.5 PUMP NO.4 IN HAND

415 50mA I4.4 PUMP NO.4 IN AUTO

417 50mA I4.7 PUMP NO.4 MOTOR OVERLOAD ALARM

428 50mA I2.1 PUMP NO.4 HIGH TEMPERATURE ALARM

429 50mA I4.6 PUMP NO.4 SEAL FAILURE ALARM

413 50mA I2.0 PUMP NO.4 ON/OFF

LEGEND

- △ DEVICE OR FIELD TERMINAL LOCATED AT MOTOR
- • DEVICE OR FIELD TERMINAL LOCATED REMOTE
- □ DEVICE OR FIELD TERMINAL LOCATED AT MCC/POWER PANEL
- ■ FIELD TERMINAL LOCATED AT CONTROL PANEL
- ▲ REMOTE TERMINAL
- ● DEVICE TERMINAL NO.
- ◆ PLC INTERFACE TERMINAL

KEYED NOTES:

1. FAULT AND TRIP RELAY OUTPUT CONTACT STATUSES SHOWN WITH THE DEVICE ENERGIZED AND IN THE NON-FAULT OR NON-TRIP STATE.
2. PUMP PROTECTION MODULE(S) (PPM) AND ASSOCIATED SCHEMATIC WIRING ARE BASED ON PUMPSAFE BRAND MODULES, TYPE 'A', 'B', OR 'D', AS INDICATED. OUTPUT CONTACT STATUS IS SHOWN IN THE ENERGIZED, NON-ALARM CONDITION. THE SCHEMATIC ILLUSTRATES THE REQUIRED PUMP MOISTURE AND TEMPERATURE MONITORING AND PROTECTION. THE CONTRACTOR SHALL COORDINATE WITH THE PUMP MANUFACTURER REGARDING THE SUPPLIED PPM(S) AND THE SENSORS INTEGRATED IN THE PUMPS, AND SHALL MODIFY THE CIRCUIT AS NECESSARY.
3. FUSED TERMINAL ON TERMINAL BLOCK TB4 POWERED BY PERMISSIVE CONTACT FROM RELAY 'RUVB' TO OPERATE THE PPM(S) AND THE PUMP PLC LOGIC. SEE CONTROL POWER & COMMUNICATIONS WIRING DIAGRAM ON SHEET 2-I-18 FOR DETAILS.
4. ALL FLOAT CONTROL CIRCUIT CONDUCTORS SHALL HAVE YELLOW INSULATION.

*1 RESISTIVE MOISTURE SENSOR
*2 BIMETAL SWITCH OR PTC THERMISTOR
*3 PTC THERMISTOR, BIMETAL SWITCH, OR LEAKAGE FLOAT
*4 PT100 RTD

KGI Kalluri Group, Inc.
TBPE Registration No. F-665
16300 Katy Freeway, Suite 172
Houston, Texas 77094
Phone: (713)-365-9288
PROJECT 4285

QUIDDITY
Texas Board of Professional Engineers and Land Surveyors Reg. No. F-23290
6330 West Loop South, Suite 150 • Bellaire, TX 77401 • 713.777.5337

JOB NO: 00050-0099-01 DATE: 5/7/2026

APPROVED BY: RK

DATE: 05/2026

DESIGNED BY: SLJ

DRAWN BY: RHW

SURVEYED BY: WESTERN GROUP CONSULTANTS

FB NO. P-6414

STATE OF TEXAS — STACY L. JORDAN — 148233 — LICENSED PROFESSIONAL ENGINEER — 05.12.2026

CITY OF HOUSTON
HOUSTON PUBLIC WORKS

SCOTT STREET NO. 1 LIFT STATION REHABILITATION
INSTRUMENTATION
WET WEATHER
PUMP 4 CONTROL
WIRING DIAGRAM

WBS NUMBER	FOR CITY OF HOUSTON USE ONLY
R-000267-127A-4	
DRAWING SCALE	
AS NOTED	
CITY OF HOUSTON PM	
TAHA LOTIA	
DWG NO. 2-I-11	
SHEET NO. 213 OF 220	

F:\Users\KGI-StacyJordan\Kalluri Group, Inc\KGI - Documents\4285-QEL (Scott Street LS)\Drawings\Instrumentation\2-I-11 Wet Weather Pump 4 Control Wiring Diagram.dwg

ORIGINAL SCALE IN INCHES FOR REDUCED PLANS

FIELD | MOTOR CONTROL CENTER | DOOR | INTERIOR PANEL | WET WEATHER LIFT STATION CONTROL PANEL | PLC

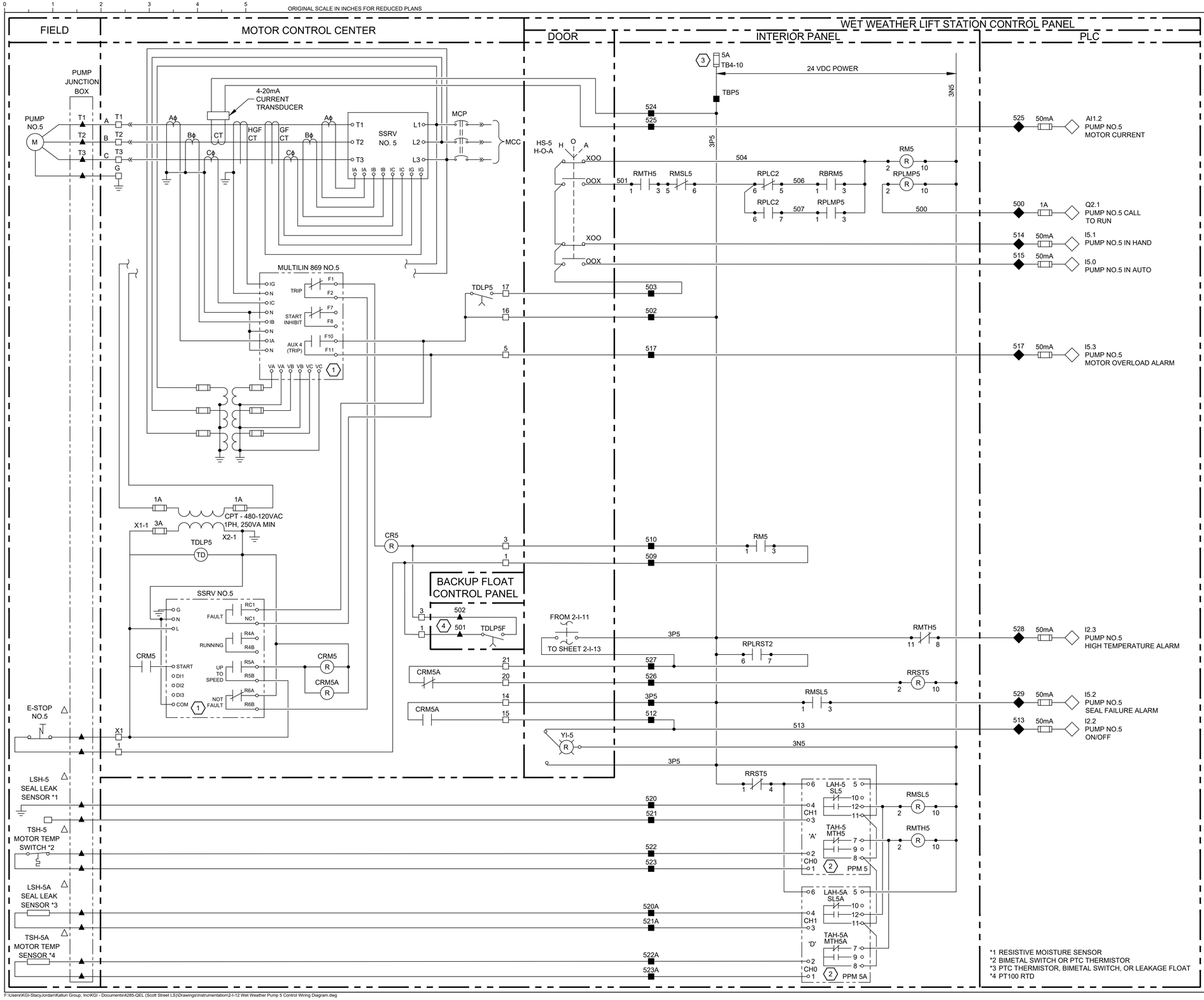

*1 RESISTIVE MOISTURE SENSOR
*2 BIMETAL SWITCH OR PTC THERMISTOR
*3 PTC THERMISTOR, BIMETAL SWITCH, OR LEAKAGE FLOAT
*4 PT100 RTD

NO.	DATE	REVISIONS	APP.

LEGEND

- △ DEVICE OR FIELD TERMINAL LOCATED AT MOTOR
- ▪ DEVICE OR FIELD TERMINAL LOCATED REMOTE
- □ DEVICE OR FIELD TERMINAL LOCATED AT MCC/POWER PANEL
- ■ FIELD TERMINAL LOCATED AT CONTROL PANEL
- ▲ REMOTE TERMINAL
- ● DEVICE TERMINAL NO.
- ◆ PLC INTERFACE TERMINAL

KEYED NOTES:

1. FAULT AND TRIP RELAY OUTPUT CONTACT STATUSES SHOWN WITH THE DEVICE ENERGIZED AND IN THE NON-FAULT OR NON-TRIP STATE.
2. PUMP PROTECTION MODULE(S) (PPM) AND ASSOCIATED SCHEMATIC WIRING ARE BASED ON PUMPSAFE BRAND MODULES, TYPE 'A', 'B', OR 'D', AS INDICATED. OUTPUT CONTACT STATUS IS SHOWN IN THE ENERGIZED, NON-ALARM CONDITION. THE SCHEMATIC ILLUSTRATES THE REQUIRED PUMP MOISTURE AND TEMPERATURE MONITORING AND PROTECTION. THE CONTRACTOR SHALL COORDINATE WITH THE PUMP MANUFACTURER REGARDING THE SUPPLIED PPM(S) AND THE SENSORS INTEGRATED IN THE PUMPS, AND SHALL MODIFY THE CIRCUIT AS NECESSARY.
3. FUSED TERMINAL ON TERMINAL BLOCK TB4 POWERED BY PERMISSIVE CONTACT FROM RELAY 'RUVA' TO OPERATE THE PPM(S) AND THE PUMP PLC LOGIC. SEE CONTROL POWER & COMMUNICATIONS WIRING DIAGRAM ON SHEET 2-I-18 FOR DETAILS.
4. ALL FLOAT CONTROL CIRCUIT CONDUCTORS SHALL HAVE YELLOW INSULATION.

KGI Kalluri Group, Inc.
TBPE Registration No. F-665
16300 Katy Freeway, Suite 172
Houston, Texas 77094
Phone: (713)-365-9288
PROJECT 4285

QUIDDITY
Texas Board of Professional Engineers and Land Surveyors Reg. No. F-23290
6330 West Loop South, Suite 150 • Bellaire, TX 77401 • 713.777.5337

JOB NO: 00050-0099-01 DATE: 5/7/2026

APPROVED BY: RK
DATE: 05/2026
DESIGNED BY: SLJ
DRAWN BY: RHW
SURVEYED BY: WESTERN GROUP CONSULTANTS
FB NO. P-6414

STATE OF TEXAS — STACY L. JORDAN — 148233 — LICENSED PROFESSIONAL ENGINEER — 05.12.2026

CITY OF HOUSTON
HOUSTON PUBLIC WORKS

SCOTT STREET NO. 1 LIFT STATION REHABILITATION
INSTRUMENTATION
WET WEATHER
PUMP 5 CONTROL
WIRING DIAGRAM

WBS NUMBER	FOR CITY OF HOUSTON USE ONLY
R-000267-127A-4	
DRAWING SCALE	
AS NOTED	
CITY OF HOUSTON PM	
TAHA LOTIA	
DWG NO. 2-I-12	
SHEET NO. 214 OF 220	

F:\Users\KGI-StacyJordan\Kalluri Group, Inc\KGI - Documents\4285-QEL (Scott Street LS)\Drawings\Instrumentation\2-I-12 Wet Weather Pump 5 Control Wiring Diagram.dwg

ORIGINAL SCALE IN INCHES FOR REDUCED PLANS

FIELD | MOTOR CONTROL CENTER | DOOR | INTERIOR PANEL | WET WEATHER LIFT STATION CONTROL PANEL | PLC

NO.	DATE	REVISIONS	APP.

PUMP JUNCTION BOX

PUMP NO.6

4-20mA CURRENT TRANSDUCER

MCP

MCC

SSRV NO. 6

HGF CT

GF CT

CT

MULTILIN 869 NO.6

TRIP

START INHIBIT

AUX 4 (TRIP)

CPT - 480-120VAC 1PH, 250VA MIN

TDLP6

SSRV NO.6

FAULT

RUNNING

UP TO SPEED

NOT FAULT

CRM6

CRM6A

E-STOP NO.6

LSH-6 SEAL LEAK SENSOR *1

TSH-6 MOTOR TEMP SWITCH *2

LSH-6A SEAL LEAK SENSOR *3

TSH-6A MOTOR TEMP SENSOR *4

BACKUP FLOAT CONTROL PANEL

TDLP6F

FROM 2-I-12

TO SHEET 2-I-14

HS-6 H-O-A

YI-6

5A TB4-11

24 VDC POWER

TBP6

3N6

3P6

RMTH6

RPLC2

RBRM6

RPLMP6

RMSL6

RRST6

RPLRST2

RM6

LAH-6 SL6

TAH-6 MTH6

LAH-6A SL6A

TAH-6A MTH6A

PPM 6

PPM 6A

625	50mA	AI1.4 PUMP NO.6 MOTOR CURRENT
600	1A	Q2.2 PUMP NO.6 CALL TO RUN
614	50mA	I5.5 PUMP NO.6 IN HAND
615	50mA	I5.4 PUMP NO.6 IN AUTO
617	50mA	I5.7 PUMP NO.6 MOTOR OVERLOAD ALARM
628	50mA	I2.5 PUMP NO.6 HIGH TEMPERATURE ALARM
629	50mA	I5.6 PUMP NO.6 SEAL FAILURE ALARM
613	50mA	I2.4 PUMP NO.6 ON/OFF

*1 RESISTIVE MOISTURE SENSOR
*2 BIMETAL SWITCH OR PTC THERMISTOR
*3 PTC THERMISTOR, BIMETAL SWITCH, OR LEAKAGE FLOAT
*4 PT100 RTD

LEGEND

- △ DEVICE OR FIELD TERMINAL LOCATED AT MOTOR
- ▪ DEVICE OR FIELD TERMINAL LOCATED REMOTE
- □ DEVICE OR FIELD TERMINAL LOCATED AT MCC/POWER PANEL
- ■ FIELD TERMINAL LOCATED AT CONTROL PANEL
- ▲ REMOTE TERMINAL
- ● DEVICE TERMINAL NO.
- ◆ PLC INTERFACE TERMINAL

KEYED NOTES:

1. FAULT AND TRIP RELAY OUTPUT CONTACT STATUSES SHOWN WITH THE DEVICE ENERGIZED AND IN THE NON-FAULT OR NON-TRIP STATE.
2. PUMP PROTECTION MODULE(S) (PPM) AND ASSOCIATED SCHEMATIC WIRING ARE BASED ON PUMPSAFE BRAND MODULES, TYPE 'A', 'B', OR 'D', AS INDICATED. OUTPUT CONTACT STATUS IS SHOWN IN THE ENERGIZED, NON-ALARM CONDITION. THE SCHEMATIC ILLUSTRATES THE REQUIRED PUMP MOISTURE AND TEMPERATURE MONITORING AND PROTECTION. THE CONTRACTOR SHALL COORDINATE WITH THE PUMP MANUFACTURER REGARDING THE SUPPLIED PPM(S) AND THE SENSORS INTEGRATED IN THE PUMPS, AND SHALL MODIFY THE CIRCUIT AS NECESSARY.
3. FUSED TERMINAL ON TERMINAL BLOCK TB4 POWERED BY PERMISSIVE CONTACT FROM RELAY 'RUVB' TO OPERATE THE PPM(S) AND THE PUMP PLC LOGIC. SEE CONTROL POWER & COMMUNICATIONS WIRING DIAGRAM ON SHEET 2-I-18 FOR DETAILS.
4. ALL FLOAT CONTROL CIRCUIT CONDUCTORS SHALL HAVE YELLOW INSULATION.

KGI Kalluri Group, Inc.
TBPE Registration No. F-665
16300 Katy Freeway, Suite 172
Houston, Texas 77094
Phone: (713)-365-9288
PROJECT 4285

QUIDDITY
Texas Board of Professional Engineers and Land Surveyors Reg. No. F-23290
6330 West Loop South, Suite 150 • Bellaire, TX 77401 • 713.777.5337

JOB NO: 00050-0099-01 DATE: 5/7/2026

APPROVED BY: RK

DATE: 05/2026

DESIGNED BY: SLJ

DRAWN BY: RHW

SURVEYED BY: WESTERN GROUP CONSULTANTS
FB NO. P-6414

STATE OF TEXAS — STACY L. JORDAN — 148233 — LICENSED PROFESSIONAL ENGINEER — 05.12.2026

CITY OF HOUSTON
HOUSTON PUBLIC WORKS

SCOTT STREET NO. 1 LIFT STATION REHABILITATION
INSTRUMENTATION
WET WEATHER
PUMP 6 CONTROL
WIRING DIAGRAM

WBS NUMBER	FOR CITY OF HOUSTON USE ONLY
R-000267-127A-4	
DRAWING SCALE	
AS NOTED	
CITY OF HOUSTON PM	
TAHA LOTIA	
DWG NO. 2-I-13	
SHEET NO. 215 OF 220	

F:\Users\KGI-StacyJordan\Kalluri Group, Inc\KGI - Documents\4285-QEL (Scott Street LS)\Drawings\Instrumentation\2-I-13 Wet Weather Pump 6 Control Wiring Diagram.dwg

ORIGINAL SCALE IN INCHES FOR REDUCED PLANS

FIELD | MOTOR CONTROL CENTER | DOOR | INTERIOR PANEL | WET WEATHER LIFT STATION CONTROL PANEL | PLC

NO.	DATE	REVISIONS	APP.

PUMP JUNCTION BOX

PUMP NO.7

4-20mA CURRENT TRANSDUCER

MCP

MCC

SSRV NO. 7

MULTILIN 869 NO.7

CPT - 480-120VAC 1PH, 250VA MIN

TDLP7

SSRV NO.7

BACKUP FLOAT CONTROL PANEL

TDLP7F

FROM 2-I-13

TO SHEET 2-I-15

HS-7 H-O-A

RM7

RPLMP7

RPLC3

RMTH7

RMSL7

RBRM7

RPLRST3

RRST7

CRM7

CRM7A

YI-7

E-STOP NO.7

LSH-7 SEAL LEAK SENSOR *1

TSH-7 MOTOR TEMP SWITCH *2

LSH-7A SEAL LEAK SENSOR *3

TSH-7A MOTOR TEMP SENSOR *4

LAH-7 SL7

TAH-7 MTH7

LAH-7A SL7A

TAH-7A MTH7A

PPM 7

PPM 7A

3 5A TB4-12 — 24 VDC POWER — TBP7 — 3N7

724 / 725 — 3P7

725 — 50mA — AI1.6 PUMP NO.7 MOTOR CURRENT

704 — 701 — 706 — 707

700 — 1A — Q2.3 PUMP NO.7 CALL TO RUN

714 — 50mA — I6.1 PUMP NO.7 IN HAND

715 — 50mA — I6.0 PUMP NO.7 IN AUTO

703 — 702 — 717 — 717 — 50mA — I6.3 PUMP NO.7 MOTOR OVERLOAD ALARM

710 / 709 — 727 / 726 — 712 / 713 — 3N7

728 — 50mA — I2.7 PUMP NO.7 HIGH TEMPERATURE ALARM

729 — 50mA — I6.2 PUMP NO.7 SEAL FAILURE ALARM

713 — 50mA — I2.6 PUMP NO.7 ON/OFF

720 / 721 — 722 / 723 — 720A / 721A — 722A / 723A

*1 RESISTIVE MOISTURE SENSOR
*2 BIMETAL SWITCH OR PTC THERMISTOR
*3 PTC THERMISTOR, BIMETAL SWITCH, OR LEAKAGE FLOAT
*4 PT100 RTD

LEGEND

- △ DEVICE OR FIELD TERMINAL LOCATED AT MOTOR
- ▪ DEVICE OR FIELD TERMINAL LOCATED REMOTE
- □ DEVICE OR FIELD TERMINAL LOCATED AT MCC/POWER PANEL
- ■ FIELD TERMINAL LOCATED AT CONTROL PANEL
- ▲ REMOTE TERMINAL
- ● DEVICE TERMINAL NO.
- ◆ PLC INTERFACE TERMINAL

KEYED NOTES:

1. FAULT AND TRIP RELAY OUTPUT CONTACT STATUSES SHOWN WITH THE DEVICE ENERGIZED AND IN THE NON-FAULT OR NON-TRIP STATE.
2. PUMP PROTECTION MODULE(S) (PPM) AND ASSOCIATED SCHEMATIC WIRING ARE BASED ON PUMPSAFE BRAND MODULES, TYPE 'A', 'B', OR 'D', AS INDICATED. OUTPUT CONTACT STATUS IS SHOWN IN THE ENERGIZED, NON-ALARM CONDITION. THE SCHEMATIC ILLUSTRATES THE REQUIRED PUMP MOISTURE AND TEMPERATURE MONITORING AND PROTECTION. THE CONTRACTOR SHALL COORDINATE WITH THE PUMP MANUFACTURER REGARDING THE SUPPLIED PPM(S) AND THE SENSORS INTEGRATED IN THE PUMPS, AND SHALL MODIFY THE CIRCUIT AS NECESSARY.
3. FUSED TERMINAL ON TERMINAL BLOCK TB4 POWERED BY PERMISSIVE CONTACT FROM RELAY 'RUVA' TO OPERATE THE PPM(S) AND THE PUMP PLC LOGIC. SEE CONTROL POWER & COMMUNICATIONS WIRING DIAGRAM ON SHEET 2-I-18 FOR DETAILS.
4. ALL FLOAT CONTROL CIRCUIT CONDUCTORS SHALL HAVE YELLOW INSULATION.

KGI Kalluri Group, Inc.
TBPE Registration No. F-665
16300 Katy Freeway, Suite 172
Houston, Texas 77094
Phone: (713)-365-9288
PROJECT 4285

QUIDDITY
Texas Board of Professional Engineers and Land Surveyors Reg. No. F-23290
6330 West Loop South, Suite 150 • Bellaire, TX 77401 • 713.777.5337

JOB NO: 00050-0099-01 DATE: 5/7/2026

APPROVED BY: RK

DATE: 05/2026

DESIGNED BY: SLJ

DRAWN BY: RHW

SURVEYED BY: WESTERN GROUP CONSULTANTS
FB NO. P-6414

STATE OF TEXAS — STACY L. JORDAN — 148233 — LICENSED PROFESSIONAL ENGINEER — 05.12.2026

CITY OF HOUSTON
HOUSTON PUBLIC WORKS

SCOTT STREET NO. 1 LIFT STATION REHABILITATION
INSTRUMENTATION
WET WEATHER
PUMP 7 CONTROL
WIRING DIAGRAM

WBS NUMBER	FOR CITY OF HOUSTON USE ONLY
R-000267-127A-4	
DRAWING SCALE	
AS NOTED	
CITY OF HOUSTON PM	
TAHA LOTIA	
DWG NO. 2-I-14	
SHEET NO. 216 OF 220	

F:\Users\KGI-StacyJordan\Kalluri Group, Inc\KGI - Documents\4285-QEL (Scott Street LS)\Drawings\Instrumentation\2-I-14 Wet Weather Pump 7 Control Wiring Diagram.dwg

ORIGINAL SCALE IN INCHES FOR REDUCED PLANS

FIELD | MOTOR CONTROL CENTER | DOOR | INTERIOR PANEL | WET WEATHER LIFT STATION CONTROL PANEL | PLC

NO.	DATE	REVISIONS	APP.

PUMP JUNCTION BOX

PUMP NO.8

4-20mA CURRENT TRANSDUCER

SSRV NO. 8

MCP

MCC

HGF CT

GF CT

CT

MULTILIN 869 NO.8

TRIP

START INHIBIT

AUX 4 (TRIP)

CPT - 480-120VAC 1PH, 250VA MIN

TDLP8

SSRV NO.8

FAULT

RUNNING

UP TO SPEED

NOT FAULT

CRM8

CRM8A

E-STOP NO.8

LSH-8 SEAL LEAK SENSOR *1

TSH-8 MOTOR TEMP SWITCH *2

LSH-8A SEAL LEAK SENSOR *3

TSH-8A MOTOR TEMP SENSOR *4

BACKUP FLOAT CONTROL PANEL

TDLP8F

FROM 2-I-14

HS-8 H-O-A

YI-8

5A TB4-13

24 VDC POWER

TBP8

3N8

3P8

RM8

RMTH8

RMSL8

RPLC3

RBRM8

RPLMP8

RPLRST3

RRST8

LAH-8 SL8

TAH-8 MTH8

LAH-8A SL8A

TAH-8A MTH8A

PPM 8

PPM 8A

825 50mA AI1.8 PUMP NO.8 MOTOR CURRENT

800 1A Q2.4 PUMP NO.8 CALL TO RUN

814 50mA I6.5 PUMP NO.8 IN HAND

815 50mA I6.4 PUMP NO.8 IN AUTO

817 50mA I6.7 PUMP NO.8 MOTOR OVERLOAD ALARM

828 50mA I7.1 PUMP NO.8 HIGH TEMPERATURE ALARM

829 50mA I6.6 PUMP NO.8 SEAL FAILURE ALARM

813 50mA I7.0 PUMP NO.8 ON/OFF

*1 RESISTIVE MOISTURE SENSOR
*2 BIMETAL SWITCH OR PTC THERMISTOR
*3 PTC THERMISTOR, BIMETAL SWITCH, OR LEAKAGE FLOAT
*4 PT100 RTD

LEGEND

- △ DEVICE OR FIELD TERMINAL LOCATED AT MOTOR
- ▪ DEVICE OR FIELD TERMINAL LOCATED REMOTE
- □ DEVICE OR FIELD TERMINAL LOCATED AT MCC/POWER PANEL
- ■ FIELD TERMINAL LOCATED AT CONTROL PANEL
- ▲ REMOTE TERMINAL
- ● DEVICE TERMINAL NO.
- ◆ PLC INTERFACE TERMINAL

KEYED NOTES:

1. FAULT AND TRIP RELAY OUTPUT CONTACT STATUSES SHOWN WITH THE DEVICE ENERGIZED AND IN THE NON-FAULT OR NON-TRIP STATE.
2. PUMP PROTECTION MODULE(S) (PPM) AND ASSOCIATED SCHEMATIC WIRING ARE BASED ON PUMPSAFE BRAND MODULES, TYPE 'A', 'B', OR 'D', AS INDICATED. OUTPUT CONTACT STATUS IS SHOWN IN THE ENERGIZED, NON-ALARM CONDITION. THE SCHEMATIC ILLUSTRATES THE REQUIRED PUMP MOISTURE AND TEMPERATURE MONITORING AND PROTECTION. THE CONTRACTOR SHALL COORDINATE WITH THE PUMP MANUFACTURER REGARDING THE SUPPLIED PPM(S) AND THE SENSORS INTEGRATED IN THE PUMPS, AND SHALL MODIFY THE CIRCUIT AS NECESSARY.
3. FUSED TERMINAL ON TERMINAL BLOCK TB4 POWERED BY PERMISSIVE CONTACT FROM RELAY 'RUVB' TO OPERATE THE PPM(S) AND THE PUMP PLC LOGIC. SEE CONTROL POWER & COMMUNICATIONS WIRING DIAGRAM ON SHEET 2-I-18 FOR DETAILS.
4. ALL FLOAT CONTROL CIRCUIT CONDUCTORS SHALL HAVE YELLOW INSULATION.

KGI Kalluri Group, Inc.
TBPE Registration No. F-665
16300 Katy Freeway, Suite 172
Houston, Texas 77094
Phone: (713)-365-9288
PROJECT 4285

QUIDDITY
Texas Board of Professional Engineers and Land Surveyors Reg. No. F-23290
6330 West Loop South, Suite 150 • Bellaire, TX 77401 • 713.777.5337

JOB NO: 00050-0099-01 DATE: 5/7/2026

APPROVED BY: RK

DATE: 05/2026

DESIGNED BY: SLJ

DRAWN BY: RHW

SURVEYED BY: WESTERN GROUP CONSULTANTS
FB NO. P-6414

STATE OF TEXAS — STACY L. JORDAN — 148233 — LICENSED PROFESSIONAL ENGINEER — 05.12.2026

CITY OF HOUSTON
HOUSTON PUBLIC WORKS

SCOTT STREET NO. 1 LIFT STATION REHABILITATION
INSTRUMENTATION
WET WEATHER
PUMP 8 CONTROL
WIRING DIAGRAM

WBS NUMBER	FOR CITY OF HOUSTON USE ONLY
R-000267-127A-4	
DRAWING SCALE	
AS NOTED	
CITY OF HOUSTON PM	
TAHA LOTIA	
DWG NO. 2-I-15	
SHEET NO. 217 OF 220	

F:\Users\KGI-StacyJordan\Kalluri Group, Inc\KGI - Documents\4285-QEL (Scott Street LS)\Drawings\Instrumentation\2-I-15 Wet Weather Pump 8 Control Wiring Diagram.dwg

ORIGINAL SCALE IN INCHES FOR REDUCED PLANS

FIELD | MOTOR CONTROL CENTER | DOOR | DRY WEATHER BACKUP FLOAT CONTROL PANEL INTERIOR PANEL | WET WEATHER LIFT STATION CONTROL PANEL INTERIOR PANEL | PLC

L2 — 120VAC POWER FROM PANELBOARD — L2N

5A

PM1 11 12 — RUVFA 2 R 10 — RUVFA1 2 R 10

PM2 11 12 — RUVFB 2 R 10 — RUVFB1 2 R 10

CRM1 — RFLPA 2 R 10

CRM3 CRM4 CRM5 CRM6 CRM7 — RFLPB 2 R 10

RFS1 1 3

YI-1 W POWER ON

RFS1 11 9

WET WELL FLOATS

INSTRUMENTATION JUNCTION BOX

HIGH LEVEL FLOAT FS1

HIGH-HIGH LEVEL FLOAT FS2

INTRINSICALLY SAFE RELAY — ISO 1 — 7 5 / 8 6 / 1 4 / 2 3

INTRINSICALLY SAFE RELAY — ISO 2 — 7 5 / 8 6 / 1 4 / 2 3

RFS1 6 7

RFS1 2 R 10

RFS2 2 R 10

RFS3 2 R 10

RUVFA 1 4 2 TDLP1F TD 10 (30 SEC)

RFLPA 1 4 / RUVFB 1 4 2 TDLP2F TD 10 (60 SEC)

RUVFA 6 5 2 TDLP3F TD 10 (90 SEC)

RUVFB 6 5 2 TDLP4F TD 10 (120 SEC)

RUVFA 11 8 2 TDLP5F TD 10 (150 SEC)

RUVFB 11 8 2 TDLP6F TD 10 (180 SEC)

RUVFA1 1 4 2 TDLP7F TD 10 (210 SEC)

RFLPB 1 4 / RUVFB1 1 4 2 TDLP8F TD 10 (240 SEC)

MATCHLINE X — 120 VAC POWER — 24VDC

L1A — +24 — -24 — L1N

36A 50mA — I0.2 FLOAT HIGH-HIGH LEVEL ALARM ALL PUMPS ON

BACK UP PLC

37A 50mA — I0.2 FLOAT HIGH-HIGH LEVEL ALARM ALL PUMPS ON

MATCHLINE X

KEYED NOTES:

1. ALL FLOAT CONTROL CIRCUIT CONDUCTORS SHALL HAVE YELLOW INSULATION.

LEGEND

- △ DEVICE OR FIELD TERMINAL LOCATED AT MOTOR
- ★ DEVICE OR FIELD TERMINAL LOCATED REMOTE
- □ DEVICE OR FIELD TERMINAL LOCATED AT MCC/POWER PANEL
- ■ FIELD TERMINAL LOCATED AT CONTROL PANEL
- ▲ REMOTE TERMINAL
- ● DEVICE TERMINAL NO.
- ◆ PLC INTERFACE TERMINAL

NO.	DATE	REVISIONS	APP.

KGI Kalluri Group, Inc.
TBPE Registration No. F-665
16300 Katy Freeway, Suite 172
Houston, Texas 77094
Phone: (713)-365-9288
PROJECT 4285

QUIDDITY
Texas Board of Professional Engineers and Land Surveyors Reg. No. F-23290
6330 West Loop South, Suite 150 • Bellaire, TX 77401 • 713.777.5337

JOB NO: 00050-0099-01 DATE: 5/7/2026

APPROVED BY: RK
DATE: 05/2026
DESIGNED BY: SLJ
DRAWN BY: RHW
SURVEYED BY: WESTERN GROUP CONSULTANTS
FB NO. P-6414

STATE OF TEXAS — STACY L. JORDAN — 148233 — LICENSED PROFESSIONAL ENGINEER — 04.17.2026

CITY OF HOUSTON
HOUSTON PUBLIC WORKS

SCOTT STREET NO. 1 LIFT STATION REHABILITATION
INSTRUMENTATION
WET WEATHER BACKUP FLOAT CONTROL PANEL WIRING DIAGRAM

WBS NUMBER	FOR CITY OF HOUSTON USE ONLY
R-000267-127A-4	
DRAWING SCALE	
AS NOTED	
CITY OF HOUSTON PM	
TAHA LOTIA	
DWG NO. 2-I-16	
SHEET NO. 218 OF 220	

F:\Users\KGI-StacyJordan\Kalluri Group, Inc\KGI - Documents\4285-QEL (Scott Street LS)\Drawings\Instrumentation\2-I-16 Wet Weather Backup Float Control Panel Wiring Diagram.dwg

ORIGINAL SCALE IN INCHES FOR REDUCED PLANS

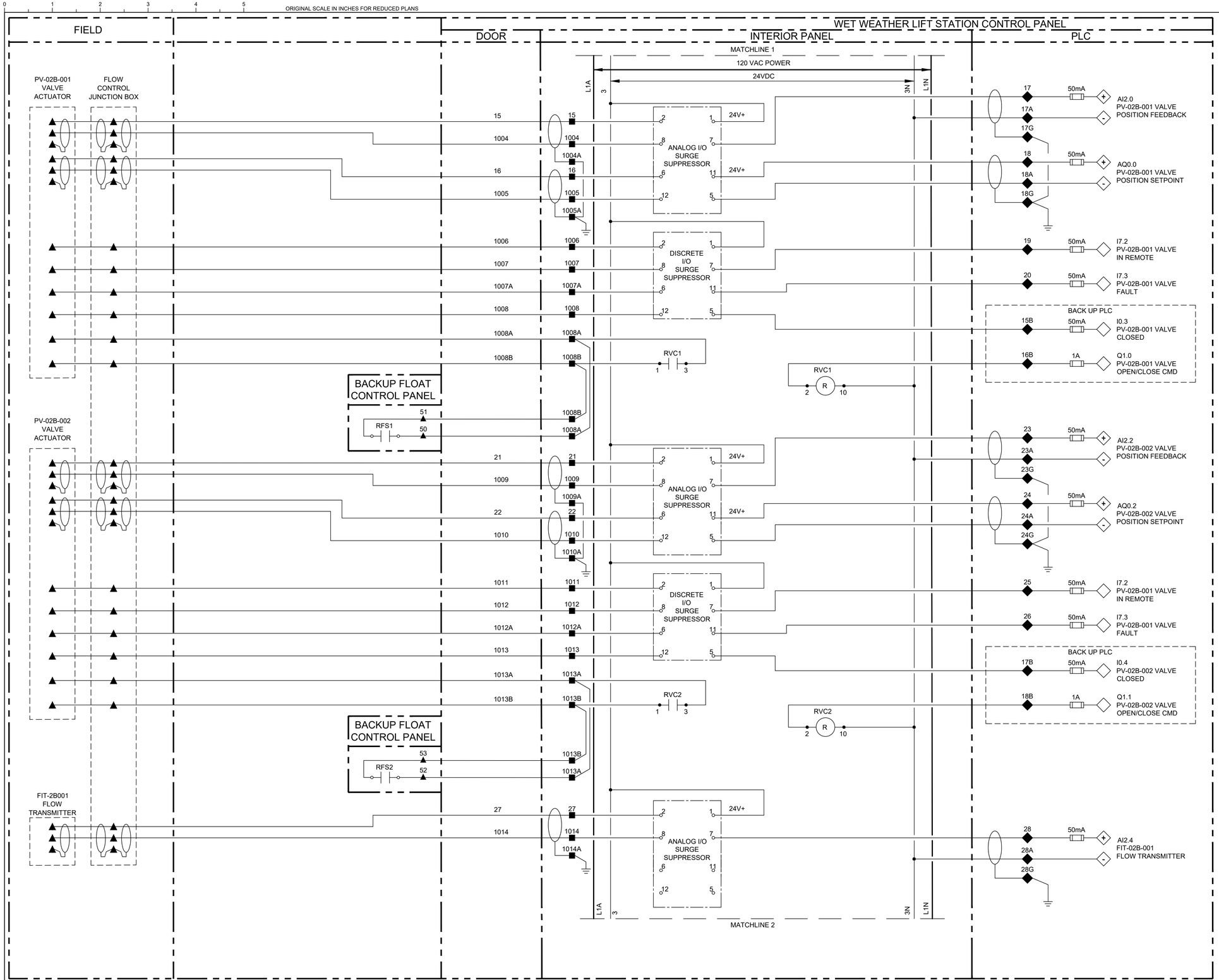

NO.	DATE	REVISIONS	APP.

LEGEND

- △ DEVICE OR FIELD TERMINAL LOCATED AT MOTOR
- ▪ DEVICE OR FIELD TERMINAL LOCATED REMOTE
- □ DEVICE OR FIELD TERMINAL LOCATED AT MCC/POWER PANEL
- ■ FIELD TERMINAL LOCATED AT CONTROL PANEL
- ▲ REMOTE TERMINAL
- ● DEVICE TERMINAL NO.
- ◆ PLC INTERFACE TERMINAL

KGI Kalluri Group, Inc.
TBPE Registration No. F-665
16300 Katy Freeway, Suite 172
Houston, Texas 77094
Phone: (713)-365-9288
PROJECT 4285

QUIDDITY
Texas Board of Professional Engineers and Land Surveyors Reg. No. F-23290
6330 West Loop South, Suite 150 • Bellaire, TX 77401 • 713.777.5337

JOB NO: 00050-0099-01 DATE: 5/7/2026

APPROVED BY: RK
DATE: 05/2026
DESIGNED BY: SLJ
DRAWN BY: RHW
SURVEYED BY: WESTERN GROUP CONSULTANTS
FB NO. P-6414

STATE OF TEXAS
STACY L. JORDAN
148233
LICENSED PROFESSIONAL ENGINEER
04.17.2026

CITY OF HOUSTON
HOUSTON PUBLIC WORKS

SCOTT STREET NO. 1 LIFT STATION REHABILITATION
INSTRUMENTATION
WET WEATHER
FLOW CONTROL STATION
CONTROL WIRING DIAGRAM

WBS NUMBER	FOR CITY OF HOUSTON USE ONLY
R-000267-127A-4	
DRAWING SCALE	
AS NOTED	
CITY OF HOUSTON PM	
TAHA LOTIA	
DWG NO. 2-I-17	
SHEET NO. 219 OF 220	

F:\Users\KGI-StacyJordan\Kalluri Group, Inc\KGI - Documents\4285-QEL (Scott Street LS)\Drawings\Instrumentation\2-I-17 Wet Weather Flow Control Station Wiring Diagram.dwg

ORIGINAL SCALE IN INCHES FOR REDUCED PLANS

NO.	DATE	REVISIONS	APP.

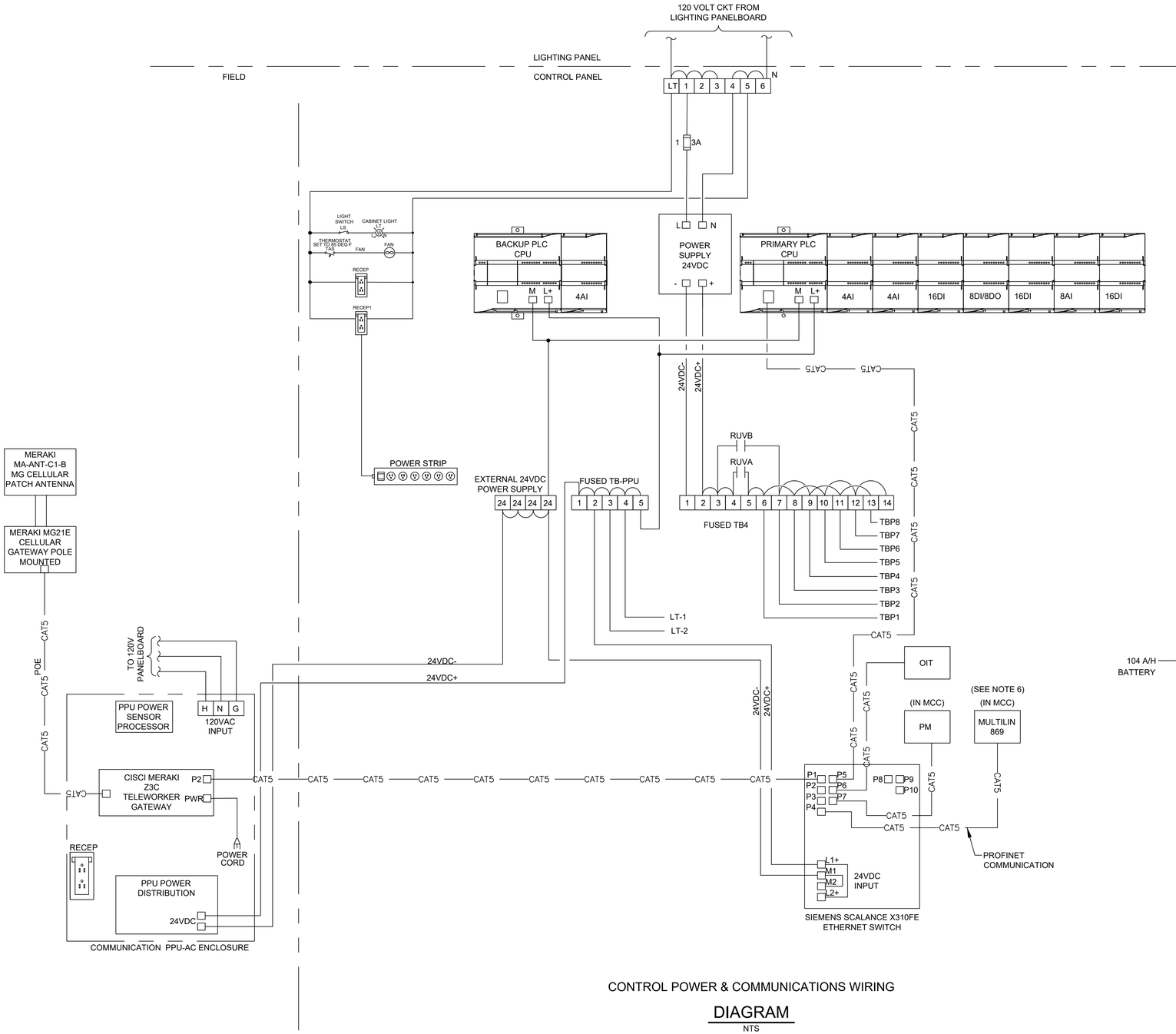

CONTROL POWER & COMMUNICATIONS WIRING

DIAGRAM

NTS

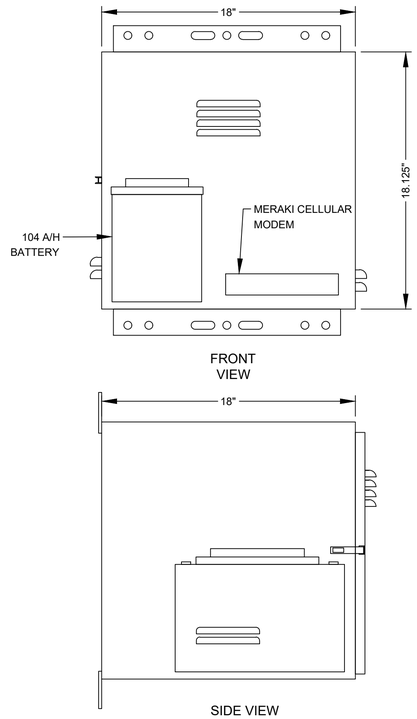

PPU-AC CONTROL ENCLOSURE

ELEVATION

NTS

NOTES:

1. REFER TO SPECIFICATION SECTION 16120 LOW-VOLTAGE WIRES AND CABLES FOR CONDUCTOR COLOR CODE.
2. THE PLC POWER SUPPLY SHALL FEED THE 24VDC I/O.
3. COMMUNICATION PPU-AC & SCADA SHALL BE PROVIDED BY CONTRACTOR INCLUDING TO RUN CONDUITS & WIRES.
4. ETHERNET CABLE FOR MERAKI CELLULAR ROUTER (P1).
5. POE CABLE TO RADIO.
6. THE WET WEATHER PLC SHALL HAVE (8) 869 MOTOR PROTECTION RELAYS, CONNECTED VIA PROFINET COMMUNICATION. CONNECT TO EACH RELAY IN A DAISY CHAIN CONFIGURATION.

KGI Kalluri Group, Inc.
TBPE Registration No. F-665
16300 Katy Freeway, Suite 172
Houston, Texas 77094
Phone: (713)-365-9288
PROJECT 4285

QUIDDITY
Texas Board of Professional Engineers and Land Surveyors Reg. No. F-23290
6330 West Loop South, Suite 150 • Bellaire, TX 77401 • 713.777.5337

JOB NO: 00050-0099-01 DATE: 5/7/2026

APPROVED BY: RK

DATE: 05/2026

DESIGNED BY: SLJ

DRAWN BY: RHW

SURVEYED BY: WESTERN GROUP CONSULTANTS

FB NO. P-6414

STATE OF TEXAS
STACY L. JORDAN
148233
LICENSED
PROFESSIONAL ENGINEER
04.12.2026

CITY OF HOUSTON
HOUSTON PUBLIC WORKS

SCOTT STREET NO. 1 LIFT STATION REHABILITATION

INSTRUMENTATION

WET WEATHER PLC COMMUNICATION DIAGRAM

WBS NUMBER	FOR CITY OF HOUSTON USE ONLY
R-000267-127A-4	
DRAWING SCALE	
AS NOTED	
CITY OF HOUSTON PM	
TAHA LOTIA	
DWG NO. 2-I-18	
SHEET NO. 220 OF 220	

F:\Users\KGI-StacyJordan\Kalluri Group, Inc\KGI - Documents\4285-QEL (Scott Street LS)\Drawings\Instrumentation\2-I-18 Wet Weather PLC Communication Diagram.dwg